ADDENDUM NO. 2

TO

CONTRACT DOCUMENTS

Hurld Park Improvements

IFB 25-10

November 13, 2025

NOTICE TO BIDDERS

The attention of all bidders submitting proposals for "Hurld Park" is called to the following Addenda to the specifications and plans. The items set forth herein, whether of omission, addition or substitution are to be included in, and form part of the specifications and plans of the above-named project for bids to be received as advertised.

PLEASE BE SURE TO ACKNOWLEDGE
THIS ADDENDUM ON BID FORM

The following clarifications, modifications, deletions, and additions are hereby incorporated into and become part of the Contract Documents. Contractors shall acknowledge receipt of this addendum with their bid submission.

SPECIFICATIONS

1. Delete Section 311319- Invasive Plant Removal
    a. Replace with 311319- Invasive Plant Removal (REVISED)

APPENDICES

1. Add the following Document to Appendix C – Example Manufacturer's cutsheets and Specifications.
    a. Hurld Park Splashpad, Woburn, MA-42368-VC-PE(Approval)
    b. F00496 - Stepper Cluster M4 - Install R2 – IFC
    c. F00499 - Combined Assembly
2. Add the following document to Appendix D – Graphics
    a. *Map of Targeted Areas and Species for Plant Management, Hurld Park Climate Resiliency Hub, Woburn, MA*, dated March 2024

ANSWERS TO QUESTIONS

The questions below were provided during the non-mandatory pre-bid meeting on November 10th, 2025 at 10am and to the Town of Woburn prior to Nov 12th, 2025 at 11am.

1. What are the invasive species present in the areas of disturbance?
    a. See Section 311319 -- Invasive Species Removal (REVISED) and the attached document: *Map of Targeted Areas and Species for Plant Management, Hurld Park Climate Resiliency Hub, Woburn, MA*, dated March 2024

2. How should contractors treat soils disturbed in areas with invasive species?
    a. See Section 311319 -- Invasive Species Removal (REVISED)

3. Please clarify what materials will remain on-site
    a. All existing soil and stone materials, including existing stockpiles, are to remain and be re-

used on-site, with exceptions noted in Section 311319 – Invasive Species Removal (REVISED). See Specification 32 33 13.

b. Surplus stone not meeting the requirements for use in specified site elements per the construction documents will be relocated or buried on-site in coordination and with approval of the Landscape Architect.

4. **Who is responsible for delivery of the playground equipment and offloading on site?**
   a. The Playground Manufacturers will be responsible for the delivery of equipment to the site. The Contractor will be responsible for coordination and scheduling of delivery with the manufacturers and offloading of equipment on-site. Due to the large nature of the Earthscape play towers, the contractor will need a crane for offloading and setting. See the attached documents for additional installation information:
      i. F00496 - Stepper Cluster M4 - Install R2 – IFC
      ii. F00499 - Combined Assembly

5. **Is there additional information for the splashpad piping?**
   a. The Document "Hurld Park Splashpad, Woburn, MA-42368-VC-PE(Approval)" has been provided as an example of piping and bonding of the splash pad for informational purposes. See Specification Division 13—Special construction for installation requirements.

6. **What are the CFS requirements for the water quality separator?**
   a. The minimum Water Quality Unit flow treatment rate is 1.11 cfs, the bypass flow rate is 16.8 cfs, and the unit must provide 80% reduction in the total suspended solids load, per specification section 33 05 14- 2.1.E.c.

ATTACHMENTS:

1. 311319- Invasive Plant Removal (REVISED)
2. Hurld Park Splashpad, Woburn, MA-42368-VC-PE(Approval)
3. F00496 - Stepper Cluster M4 - Install R2 – IFC
4. F00499 - Combined Assembly
5. *Map of Targeted Areas and Species for Plant Management, Hurld Park Climate Resiliency Hub, Woburn, MA*, dated March 2024

END OF ADDENDUM NO. 2

SECTION 31 13 19 – INVASIVE PLANT REMOVAL (REVISED)

PART 1 GENERAL

1.1 SUMMARY

A. Section includes: The work associated with invasive species removal by means of mechanical and chemical control. Invasive and nuisance species work on site includes Japanese Knotweed, Asiatic Bittersweet, and any other understory invasive species (shrub, vine, forb, or grass), and trees under 2" caliper that are identified on the Massachusetts Prohibited Plant List, and are within the Limit of Work depicted on the Drawings, regardless of if it is identified on the drawings or not.

B. Any infested soil and/or plant material including plant leaves, stems, and roots within the Limit of Work is to be reused in place or removed and disposed of off-site. Under no circumstances is soil infested with invasive plant biomass, stems, and roots to be re-located elsewhere on the project site. Any removed infested soils will require transportation to an appropriate disposal facility.

C. Any soil infested with Japanese knotweed, including plant leaves, stems, and roots within the Limit of Work, is to be removed and disposed of off-site. Under no circumstances is soil infested with Japanese knotweed to be reused on site and will require transportation to an appropriate disposal facility.

D. Related Sections:
   1. Section 31 20 00 – Earth Moving
   2. Section 31 10 00 – Site Clearing
   3. Section 31 25 00 – Erosion and Sediment Control
   4. Section 32 91 19 – Landscape Grading
   5. Section 32 92 19 – Seeding
   6. Section 32 93 00 – Plants

E. Review and follow all items within the Woburn Conservation Commission Order of Conditions DEP# 348-867.

1.2 COORDINATION

A. Meeting: A meeting is to be held at the site prior to commencement of any site work to discuss invasive species control activities. The earthwork contractor, the invasive management specialist, the landscape contractor, and the landscape architect or environmental scientist must be present at this meeting.

B. Approach: The approach to invasive management is to be tied into the construction sequence, with three treatment occurrences and site monitoring. Times of treatment are given to align with site earth work and planting. Methods used for treatment are at the discretion of the contractor but must be approved. Coordinate with the Owner and Landscape Architect to confirm schedule and approaches prior to commencing work under this Section.

C. Approvals: The Work Plan and Schedule must be approved by the Woburn Conservation Commission (Commission) prior to any work beginning.

1.3 SUBMITTALS

A. Work Plan & Schedule: Schedule and management techniques to be used to treat invasive species within the limit of work during construction. Include dates, management techniques, and plan for soil stock piling / transport. Plan must be approved by Landscape Architect or Environmental Scientist before beginning. Plan must be approved by the Conservation Commission as outlined in the Order of Conditions.

B. Herbicide Product Data
   1. Provide the following information:
      a. Material properties – all herbicides must be for aquatic use
      b. Material Safety Data Sheet (MSDS)
   2. Supplier: Name, address, and phone number.
   3. Certification credentials of individual licensed to apply and/or oversee herbicide applications.

C. Manufacturer's Certificate: Certify products meet or exceed the specified requirements.

D. Disposal Facility: Name and address of the facility in which the weed infested soils are to be disposed, only if approved and necessary.

E. Contactor to provide written qualification data for firm and person(s) to be responsible for work to demonstrate their capabilities and experience as outlined in Qualification for invasives removal.

F. Contractor to provide current Massachusetts herbicide applicator certificate of person(s) to perform work where herbicides are to be used.

1.4 CLOSEOUT SUBMITTALS

A. Management Reports: Submit reports with images, descriptions and dates of work performed in compliance with the previously approved Work Plan and Schedule from Section 1.3.A

B. Maintenance: Submit recommended procedures for routine year-round management of invasives previously present on site to owner.
   1. Include strategies for management for both manual & chemical treatment.
   2. Include time of year and schedule for maintenance activities.

1.5 QUALIFICATIONS

A. The selected contractor must have at least one staff member on-site who is trained and certified in invasive plant identification. The contractor may, alternatively, provide a sub-contractor with the required expertise.

B. The selected contractor must have at least one staff member on-site who is trained and certified by the Commonwealth of Massachusetts in herbicide application. The contractor may, alternatively, provide a sub-contractor with the required expertise.

C. The contractor completing the work must have a certificate in invasive management or equivalent.

D. The selected contractor is to have a minimum of five years of documented experience with invasive management including application and use of herbicides.

1.6 DELIVERY, STORAGE AND HANDLING

A. Deliver, handle, and store materials in accordance with supplier's instructions.

B. Do not order or deliver materials until required certificates, product information, supplier information, and facility information has been reviewed and approved by the landscape architect.

PART 2 PRODUCTS

2.1 HERBICIDES FOR CHEMICAL CONTROL

A. All herbicides and chemicals must be for aquatic use.

B. Utilize herbicides for individual species as required.

C. Outline herbicides proposed and percentages / mixtures in Work Plan and Schedule.

PART 3 EXECUTION

3.1 TREATMENT AREA

A. Invasive and nuisance species work on site includes Japanese Knotweed, Asiatic bittersweet, and any understory invasive species (shrub, vine, forb, or grass), and trees under 2” caliper that are identified on the Massachusetts Prohibited Plant List and are within the Limit of Work depicted on the Drawings, regardless of if species is identified on the drawings.

3.2 EXAMINATION

A. Inspect all areas within the Limit of Work. Identify all invasives present and flag large stands of invasive plants.

3.3 PREPARATION

A. A combination invasive species management approach, including mechanical (cutting) and chemical (herbicide) treatment, can be utilized. Verify that soil management and plant treatment techniques are coordinated with site work.

B. Flag all areas where soil should not be reused due to the presence of invasive plants, and specifically where soils are infested with Japanese knotweed. Maintain flags throughout duration of site work.

3.4 INFESTED SOIL STOCKPILE

A. Any infested soil and/or plant material including plant leaves, stems and roots, within the Limit of Work may be re-used in-place or else must be removed and disposed of off-site. Under no circumstances is soil infested with invasive plant biomass, stems, and roots to be re-used in any adjacent areas on the project site. Transportation to an appropriate disposal facility is required for any infested soils removed from the site.

B. Any soil infested with Japanese knotweed, including plant leaves, stems, and roots within the Limit of Work is to be removed and disposed of off-site. Under no circumstances is soil infested with Japanese knotweed to be reused on site and will these infested soils require transportation to an appropriate disposal facility.

C. Establish infested soil stockpile area during erosion controls and site clearing. Under no circumstances is removed biomass of invasive species to be stockpiled on site in undesignated areas. Coordinate with the Landscape Architect and/or Engineer if additional stockpiles are required.

D. Transport soil and invasive material to approved disposal site.

E. If there is a delay in transport or soil, surround the infested soil stockpile area with silt fence and straw bales as required to prevent overland flow from washing into or out of the area. Cover the infested soil stockpile area with black plastic or a tarp to minimize sun exposure to the invasive vegetation biomass.

3.5 INVASIVES MANAGEMENT SEQUENCE

A. FIRST TREATMENT

1. The first treatment is to occur at least two weeks prior to earth work activities in the areas where invasive species have been identified. If applicable based on species and time of year, herbicide is to be applied with a glove or by injection.
2. Treatment Acceptance:
    a. After treatment submit in writing the treatment performed with dates and imags to the Landscape Architect.
    b. The first treatment will be approved when all invasive vegetation has started to die or has been removed from the site. Additional applications or removal may be required. All invasive plant material must be removed from site prior to earth work.

B. SECOND TREATMENT

1. The second treatment must occur after final grades have been set, and before seeding and planting perennials and shrubs. Final grades are to be given at least three weeks to monitor if any invasive plants start to sprout before treatment. Contact the Landscape Architect to review the site prior to treatment. All regrowth from invasive species is to be removed mechanically if small in size or treated with herbicide. Any seeded areas damaged during treatment are to be replaced and amended.
2. Treatment Acceptance:
    a. After treatment, submit in writing the treatment performed with dates and images to the Landscape Architect.
    b. The treatment will be approved when all invasive plants within the treatment zone show signs of mortality, and no regrowth is visible one month after application. Follow-up applications may be required at no additional cost to the Owner if the initial application(s) are found to be only partially effective.

C. REVEGETATION

1. Plant and/or seed all areas as indicated on the Drawings ONLY following confirmation of no regrowth of invasive plants. Individual shoots that sprout amongst replanted vegetation shall be controlled by hand pulling, injection and/or “weed glove” methods only.

D. THIRD TREATMENT

1. The third treatment to occur one month after plants have been planted and site is starting to establish. Visit the site and review if invasive species are starting to emerge. If any are present, remove mechanically or spot treat as outlined in approved work plan. Any plants or seeded areas damaged during treatment are to be replaced. Individual shoots that sprout amongst replanted vegetation shall be controlled by hand pulling, injection and/or “weed glove” methods only.
2. Final Acceptance:
    a. After treatment, submit in writing the treatment performed with dates and images to the Landscape Architect.
    b. Contractor, Landscape Architect and Owner to convene on site one month after third treatment to review.
    c. The treatment will be approved and completed when all invasive plants within the treatment zone one month after application show signs of mortality and no regrowth is visible. Follow-up applications may be required at no additional cost to the Owner if the initial application(s) are found to be only partially effective.

E. MONITORING

1. Monitor all areas within the Limit of Work throughout construction for the appearance of invasive species. If any are present within the limit of work remove as appropriate based on species.

END OF SECTION

PROPERTY OF EARTHSCAPE PLAY INC. - DO NOT COPY. DO NOT DISTRIBUTE.

INSTALLATION INSTRUCTIONS

EARTHSCAPE COLLECTIONS

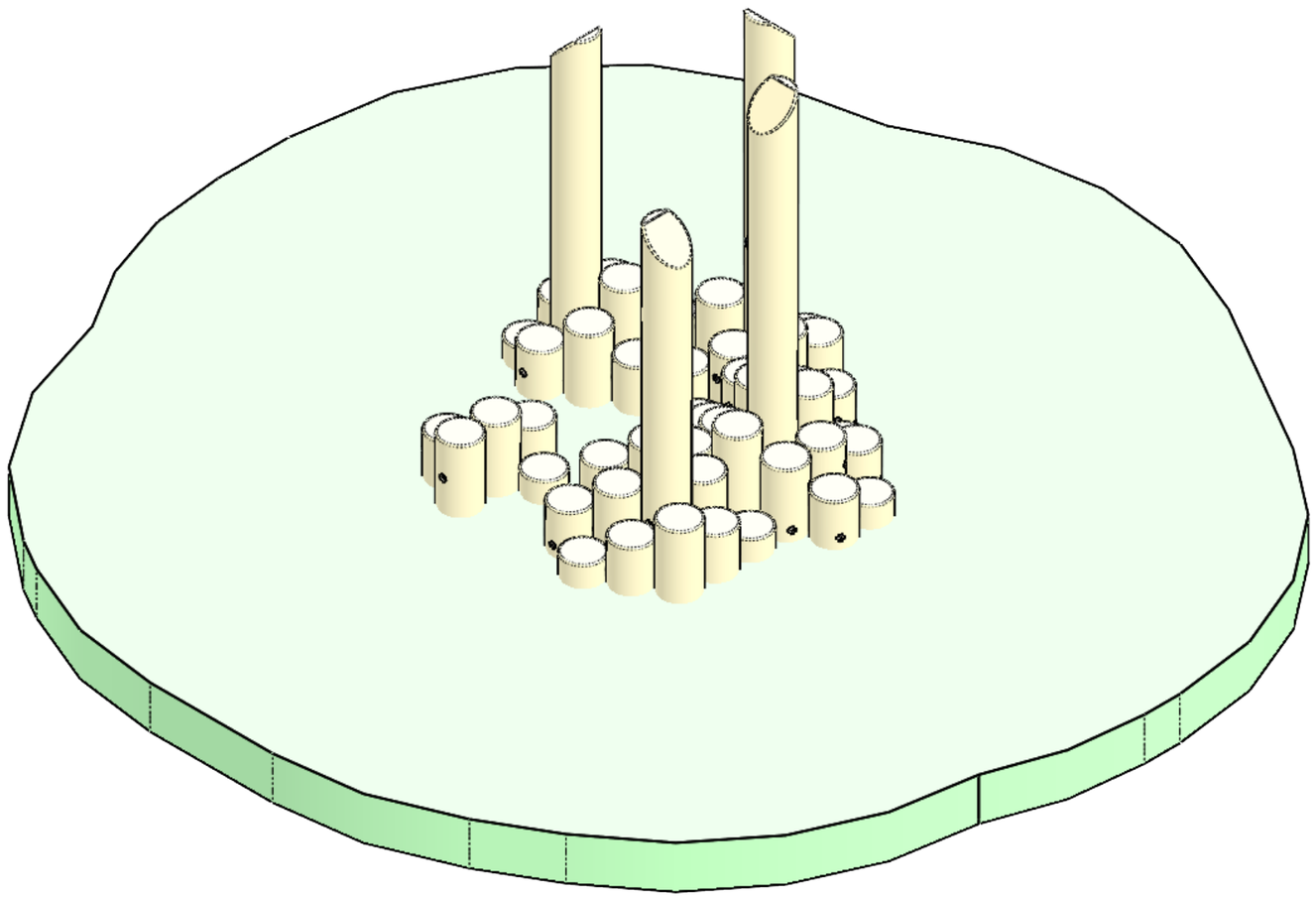

STEPPER CLUSTER M4

THESE INSTRUCTIONS APPLY TO THE FOLLOWING VERSIONS OF THIS PRODUCT:

F00496 - STEPPER CLUSTER M4
(CONCRETE FOUNDATION INSTALL)

NOTE: COLOURS SHOWN ARE REPRESENTATIONAL AND MAY NOT BE THE SAME AS THOSE OF THE SUPPLIED PRODUCT

DATE DOCUMENT RELEASED 2024-09-09
DOCUMENT NUMBER: 1063639-R2

PROPERTY OF EARTHSCAPE PLAY INC. - DO NOT COPY. DO NOT DISTRIBUTE.

SPECIFICATIONS

INTENDED USER AGE GROUP: 18m to 5y
MAXIMUM HEIGHT OF STRUCTURE: 2.74m
MAXIMUM DESIGNATED FALL HEIGHT: 0.60 m
AREA OF SURFACING: 34.9 m²
WEIGHT: 2222 kg

RECOMMENDED INSTALLATION BUFFER

Play equipment requires a variety of offsets to other elements in a playground. The plan view on this page shows the minimum recommended area needed for installing this piece of play equipment by itself. Combining this play equipment with other pieces should be reviewed by a person with a Certified Playground Safety Inspector training.
The offset shown here includes a buffer beyond the CSA requirements to account for fabrication and material variation.

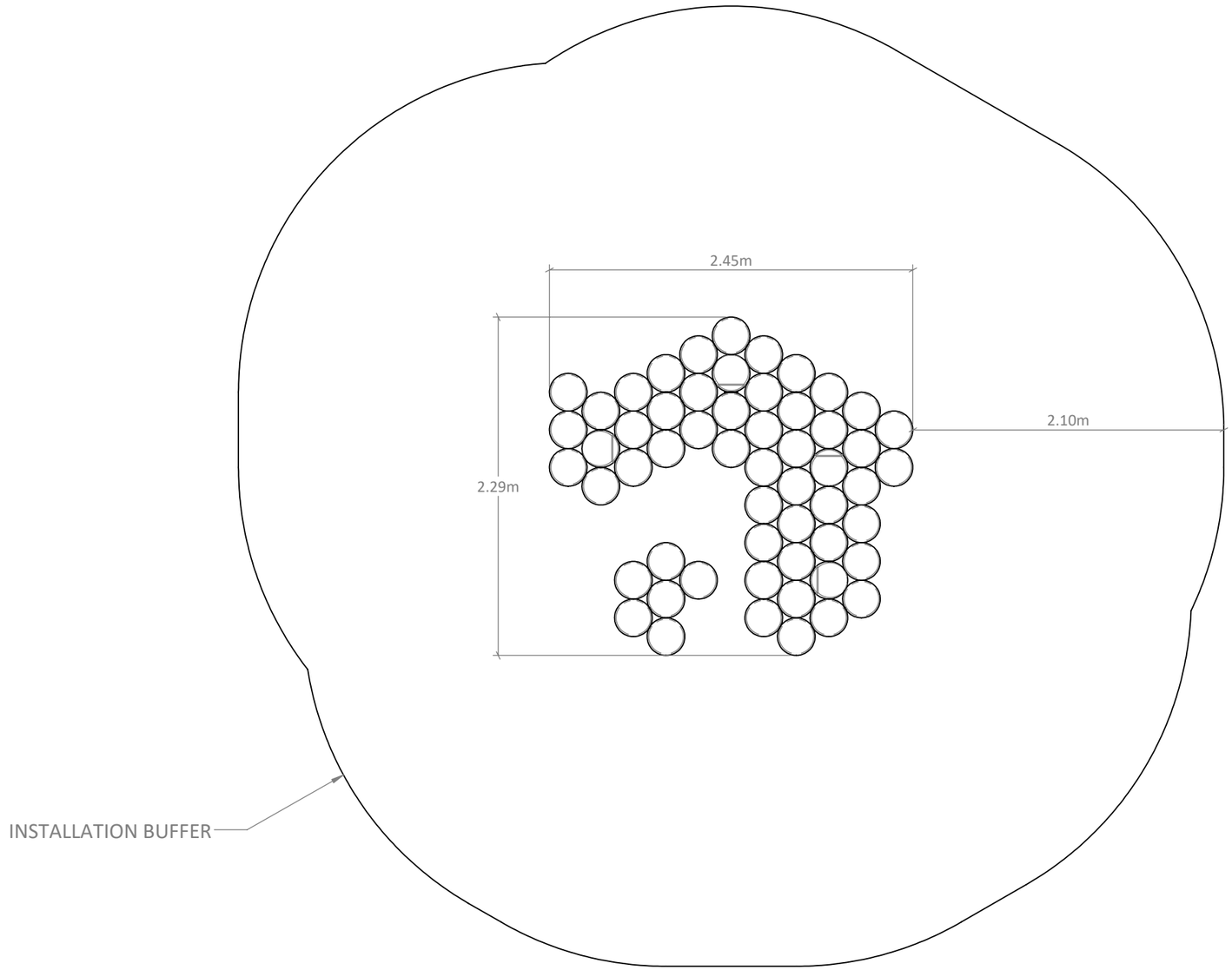

PROPERTY OF EARTHSCAPE PLAY INC. - DO NOT COPY. DO NOT DISTRIBUTE.

ASTM SPECIFICATIONS (FOR INSTALLATIONS AT U.S. SITES ONLY)

STEPPER CLUSTER M4

SPECIFICATIONS

INTENDED USER AGE GROUP: 2 to 5y
MAXIMUM HEIGHT OF STRUCTURE: 9'-0"
MAXIMUM DESIGNATED FALL HEIGHT: 2'-0"
AREA OF SURFACING: 376 ft²
WEIGHT: 4900 lb

RECOMMENDED INSTALLATION BUFFER

Play equipment requires a variety of offsets to other elements in a playground. The plan view on this page shows the minimum recommended area needed for installing this piece of play equipment by itself. Combining this play equipment with other pieces should be reviewed by a person with a Certified Playground Safety Inspector training.
The offset shown here includes a buffer beyond the ASTM requirements to account for fabrication and material variation.

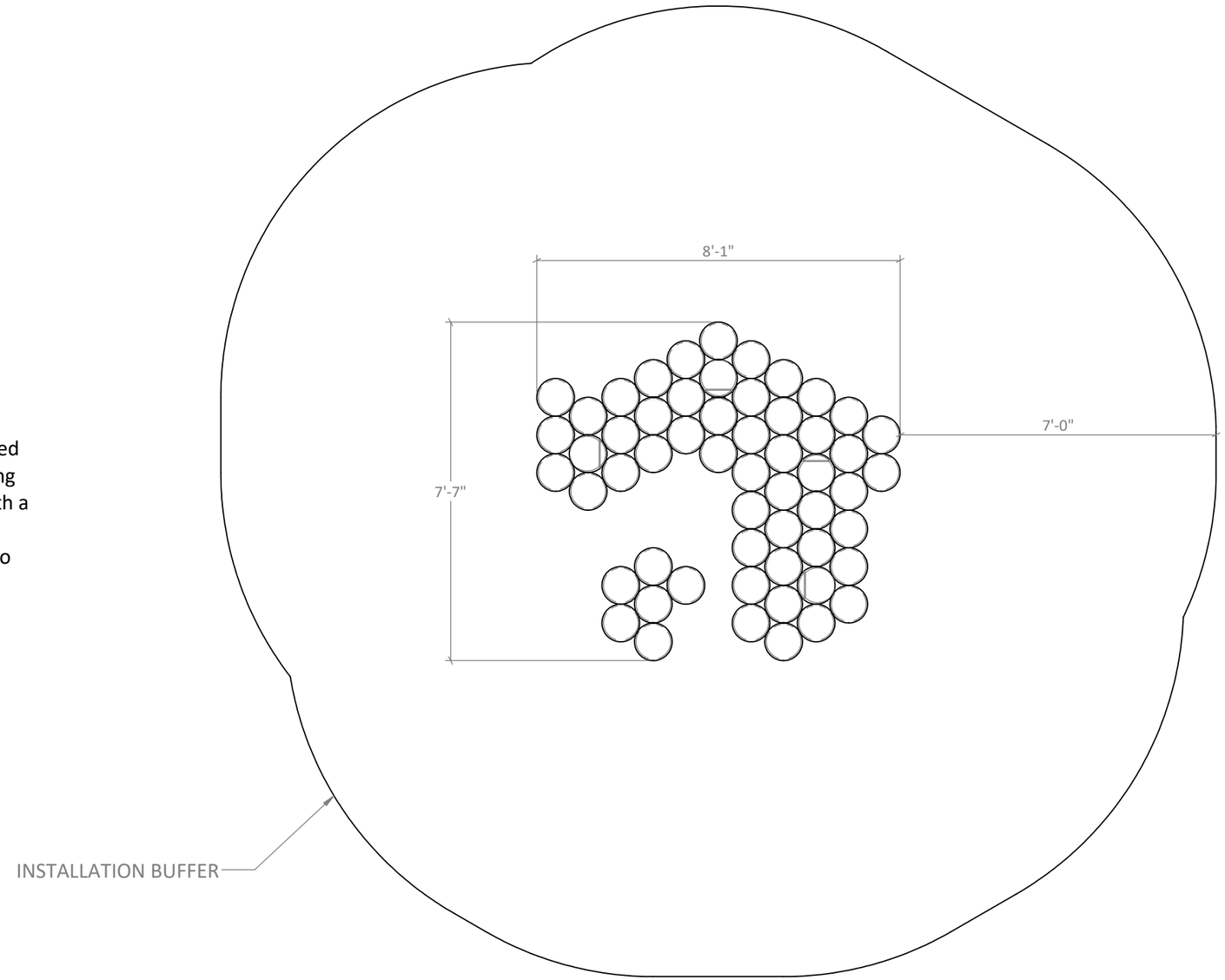

PROPERTY OF EARTHSCAPE PLAY INC. - DO NOT COPY. DO NOT DISTRIBUTE.

PLEASE READ ALL INSTRUCTIONS

Before starting to install this equipment be sure to read through and understand these instructions.
If you have any questions, contact your local dealer for assistance before proceeding.

MEASUREMENTS AND STANDARDS

Measurements have been provided in both metres and [feet-inches]. Ensure to follow standards noted for the location in which this play equipment is being installed. Those marked CSA are to be used in Canada and those marked ASTM to be used in the United States.

LIST OF ABBREVIATIONS

AYC = Alaskan Yellow Cedar
WRC = Western Red Cedar
DPS = Designated Play Surface
SS = Stainless Steel
HDG = Hot Dipped Galvanized
WWM = Welded Wire Mesh
TYP = Typical
C/W = Complete With
UNO = Unless Noted Otherwise
EWF = Engineered Wood Fiber
PIP = Poured-In-Place Rubber Surfacing
PT = Pressure Treated

TOOLS SUPPLIED WITH THIS PRODUCT

No Tools Supplied.

TOOLS THE INSTALLER NEEDS TO SUPPLY

High torque drill
Hammer drill
1/2" impact driver
Set of wood drill bits - up to 1/2"
Set of impact sockets - up to 1"
1/2" ratcheting socket wrench
T25 drive bit
T40 drive bit
Concrete drill bit, 1/2" x 8"
Angle grinder (with course 24 grit sanding disks and metal cut off disks)
Transit or Laser Level
Carpenter's Square
Rigging and lifting straps

EQUIPMENT THE INSTALLER NEEDS TO SUPPLY

Machine to lift and position heaviest element.
Stepper Cluster M4 - Trunk I +/-1030 kg [2275 lbs]

INSTALLER CREW AND TIME REQUIRED

Number of people needed: 2
Typical total person-hours to install: 16 + concrete cure time
Time breakdown:

- 4 hours x 2 people for excavation and pouring concrete
- Time for concrete cure
- 2 hours x 2 people for onsite fabrication and play equipment installation

MATERIALS THE INSTALLER NEEDS TO SUPPLY

Installer to supply materials for preparation, pour and cure of concrete. See Sheets 9 and 10.

WARNINGS

These instructions do not provide specific guidance on the use of tools or the lifting and moving heavy objects. It is assumed that competent people are installing this product who are familiar with using the tools and equipment required and are knowledgeable and skilled at lifting and positioning heavy objects.

PROPERTY OF EARTHSCAPE PLAY INC. - DO NOT COPY. DO NOT DISTRIBUTE.

MAKE SURE YOU HAVE ALL THE PARTS

Examine the equipment and ensure you have all the required parts listed in the table below.

See "As Shipped" Sheet to understand orientation of product as delivered to site.

ITEM NO.	PARTNO	DESCRIPTION	QTY.
1		STEPPER CLUSTER M4 - TRUNK I	1
2		STEPPER CLUSTER M4 - TRUNK II	1
3		STEPPER CLUSTER M4 - TRUNK III	1
4	B00060	6 X 6 DOCK BRACKET V2	10
5	H16685	WOOD SCREW, WASHER HEAD, M8X100, SS	40
6	H60020	TITEN HD 1/2" X 5" CONCRETE SCREW	20

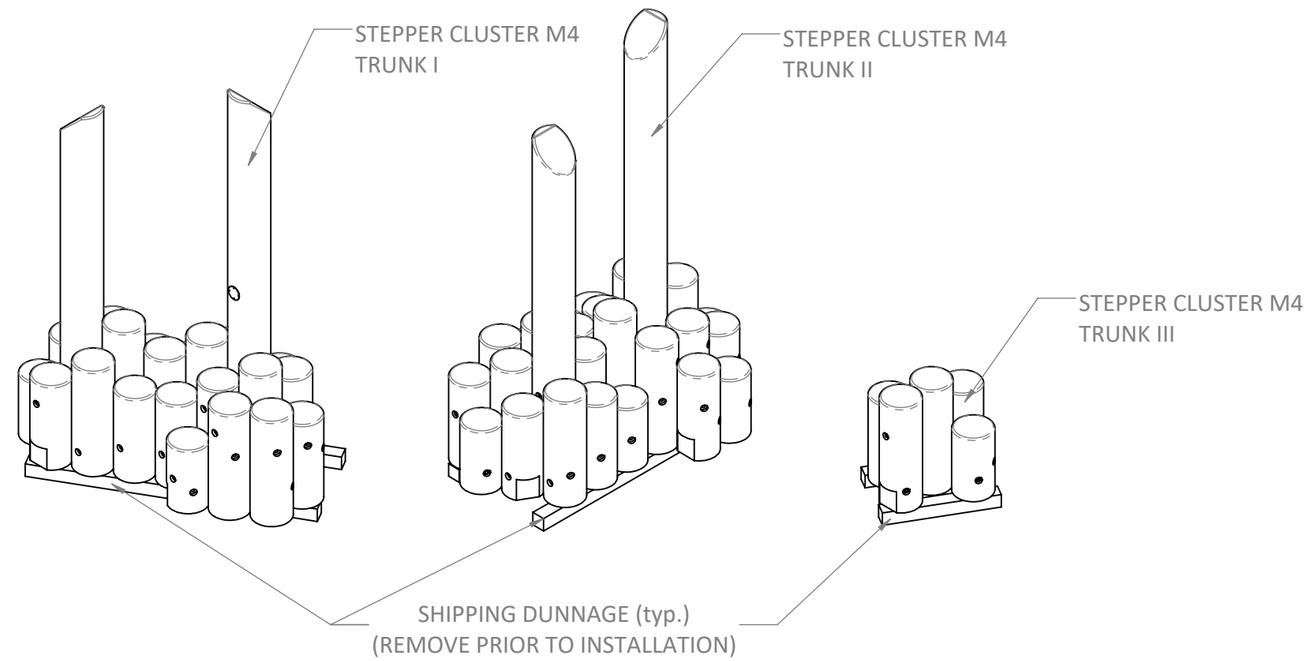

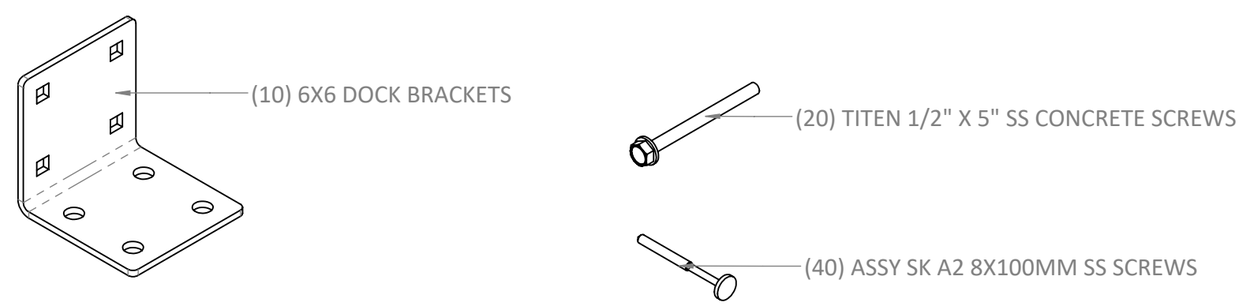

PROPERTY OF EARTHSCAPE PLAY INC. - DO NOT COPY. DO NOT DISTRIBUTE.

AS SHIPPED

STEPPER CLUSTER M4

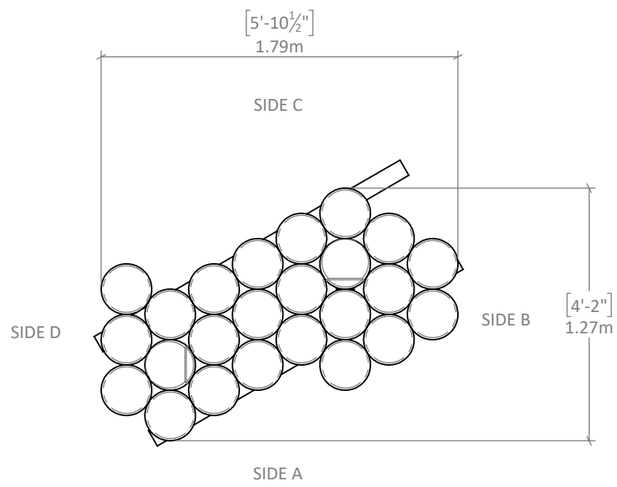

PLAN VIEW

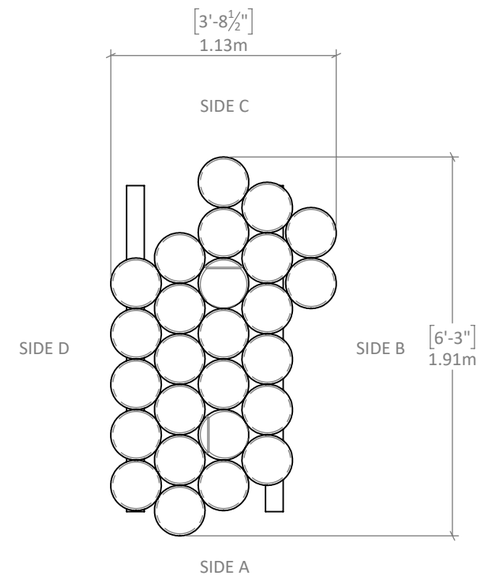

PLAN VIEW

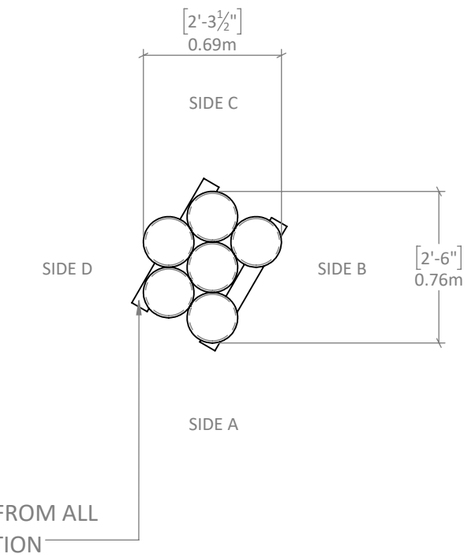

DUNNAGE TO BE REMOVED FROM ALL TRUNKS PRIOR TO INSTALLATION

PLAN VIEW

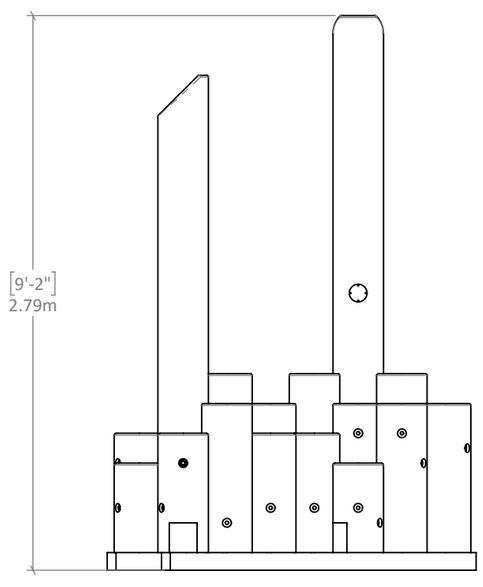

SIDE A

TRUNK I

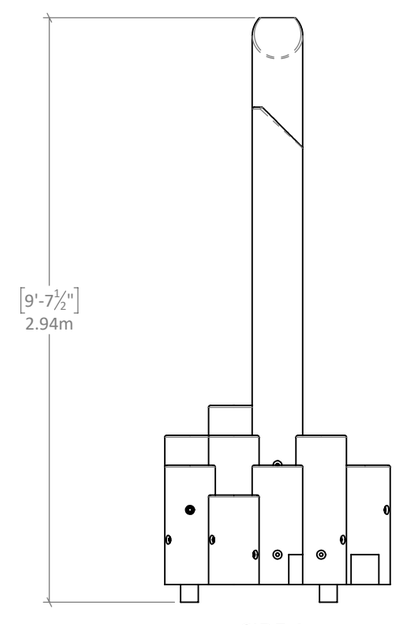

SIDE A

TRUNK II

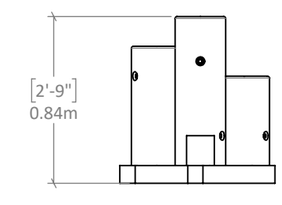

SIDE A

TRUNK III

PROPERTY OF EARTHSCAPE PLAY INC. - DO NOT COPY. DO NOT DISTRIBUTE.

HOW THE PIECES COME TOGETHER

The three pre-assembled Trunks of Stepper Cluster M4 are designed to fit with each other to form the overall finished assembly.
Trunks I and II will sit tightly together to create the majority of the assembly, while Trunk III will remain separate.

See Sheet 12 for assembly order and details.

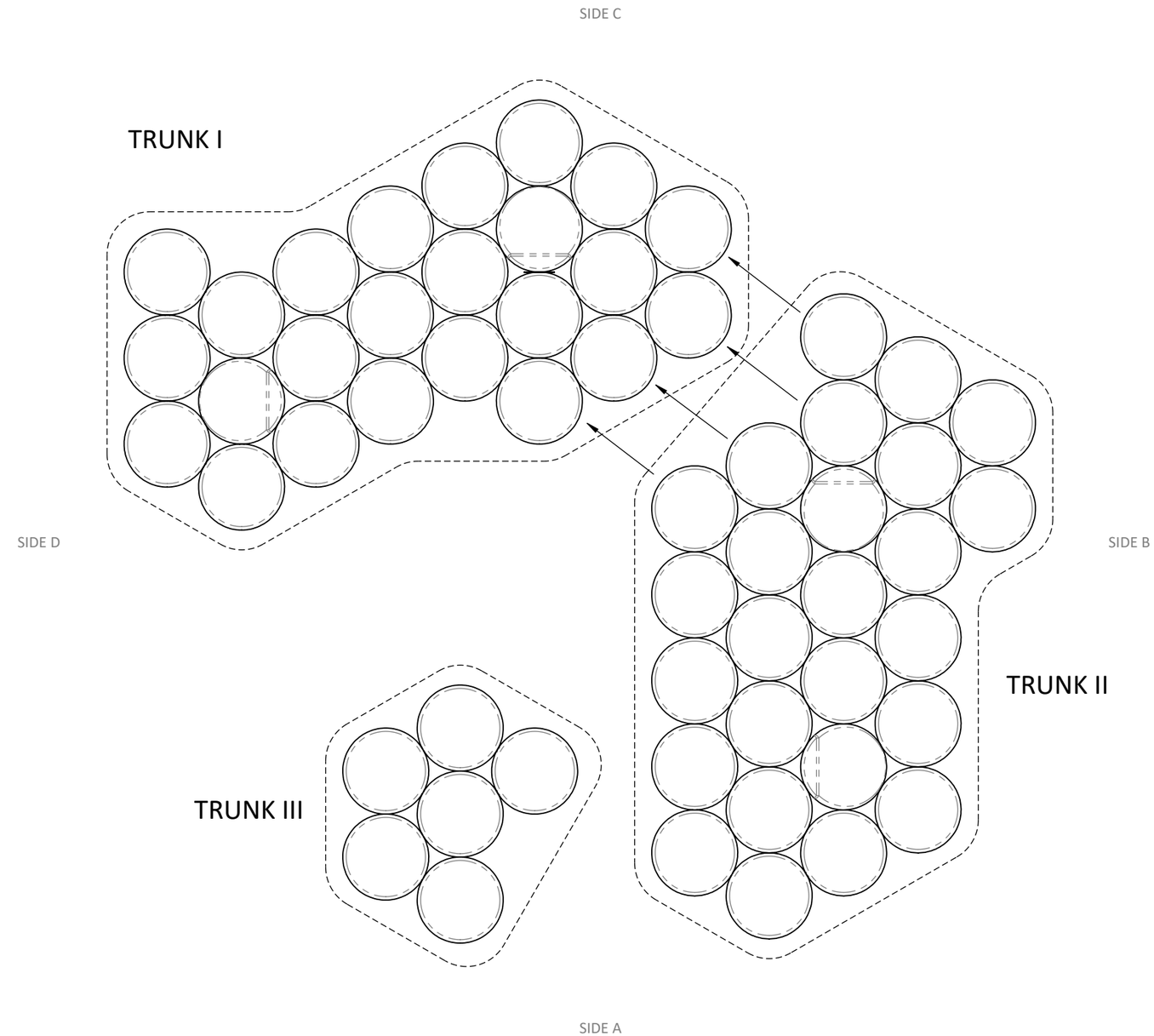

PROPERTY OF EARTHSCAPE PLAY INC. - DO NOT COPY. DO NOT DISTRIBUTE.

WHAT THE FINISHED PRODUCT LOOKS LIKE

Review the overall site layout (by others) to understand the locations and orietnation of the Stepper CLuster M4. The location of the Stepper CLuster M4 in relation to other site elements is not within the scope of these instructions and should be provided by others.

P01 is a poured-in-place concrete pad used to support and anchor Stepper Cluster M4. The concrete pad is to be provided by the installer if a suitable pad is not already provided.

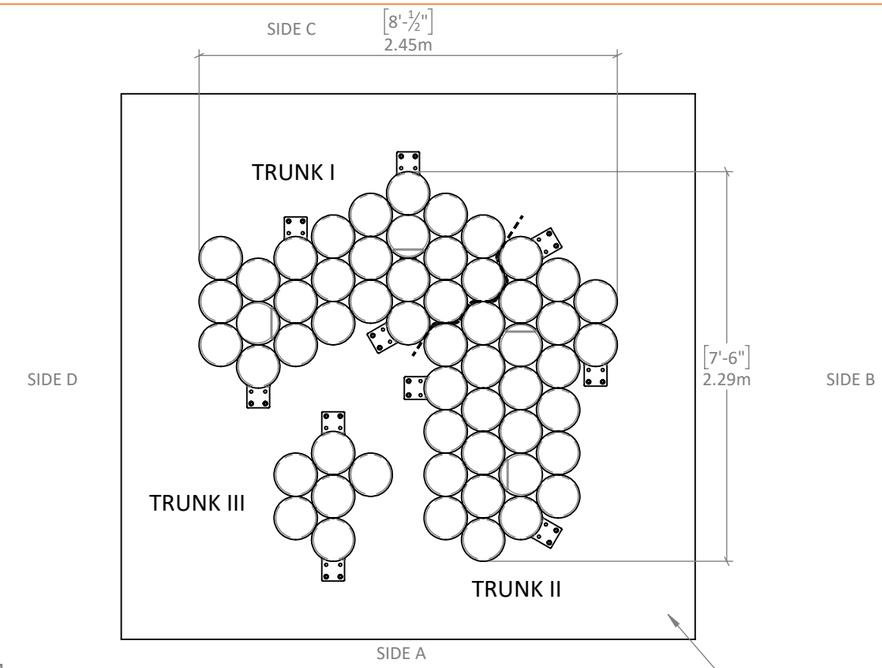

PLAN VIEW

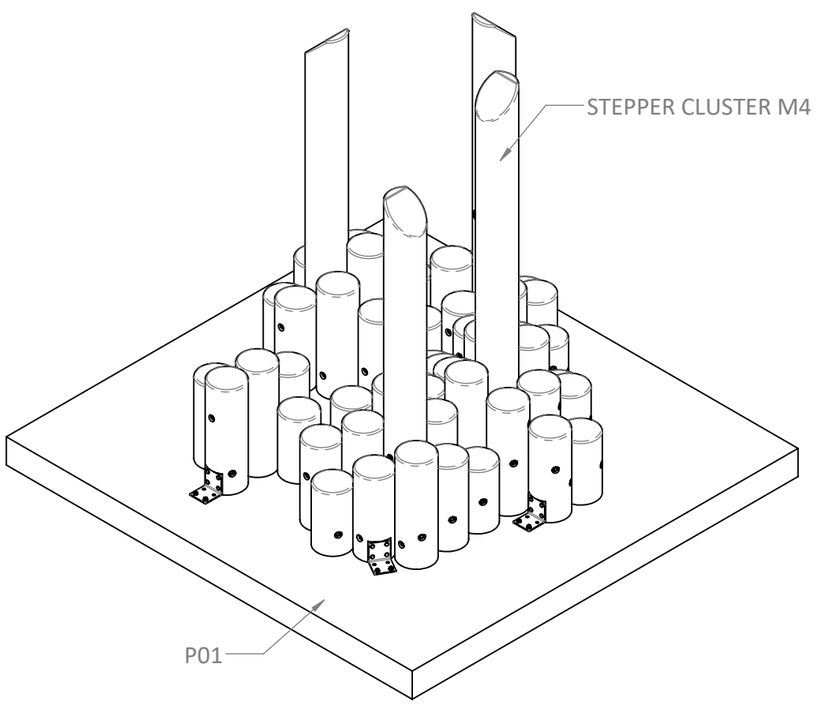

ISOMETRIC VIEW

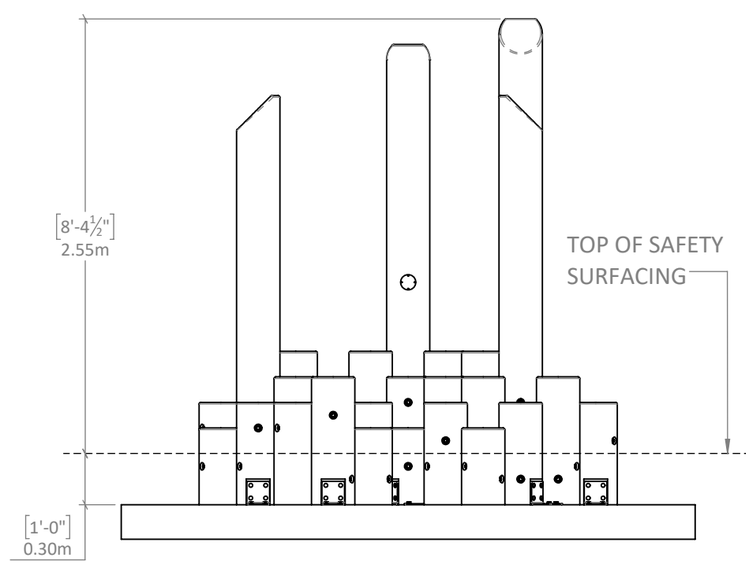

SIDE A

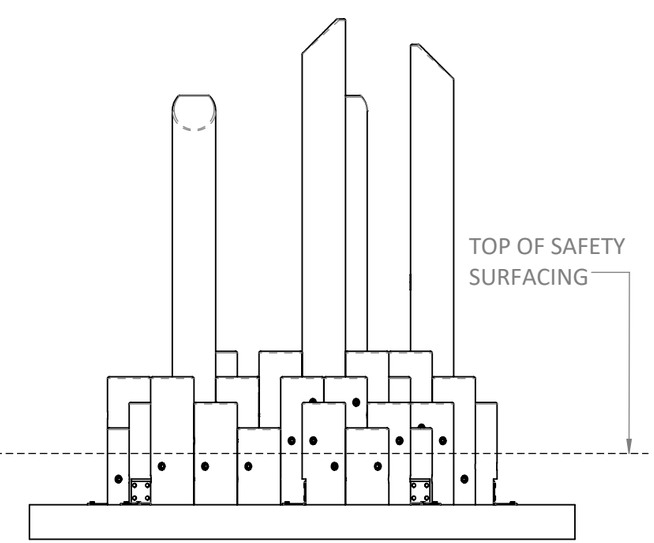

SIDE B

PROPERTY OF EARTHSCAPE PLAY INC. - DO NOT COPY. DO NOT DISTRIBUTE.

LOCATE PLAY EQUIPMENT

STEP 1 - LOCATING THE EQUIPMENT ON SITE

Lay out and mark the location of the the Stepper Cluster M4 Reference Points #1 & #2 on your site. The location of reference points relative to the site is not within the scope of these instructions and should be provided by others.

Reference Point #3 will be used only for final placement and anchoring of Trunk III and is provided here only for reference. See Sheet 12.

Ensure you know what the designed elevation is for the finished safety surface. All heights provided in these instructions will be relative to the finished safety surface. The finished surface elevation is not within the scope of these instructions and should be provided by others.

Ensure sufficient space is provided around Stepper Cluster M4 to maintain installation buffer as detailed in CSA or ASTM Specifications (sheet 2 & 3, as relevant to install location) when installed as a standalone unit.
Refer to project site plan when installed as a part of larger playground.

STEP 2 - LAYOUT CONCRETE PAD

Lay out and mark the outer edge of the concrete pad based off the dimensions provided in the Footing Plan View.

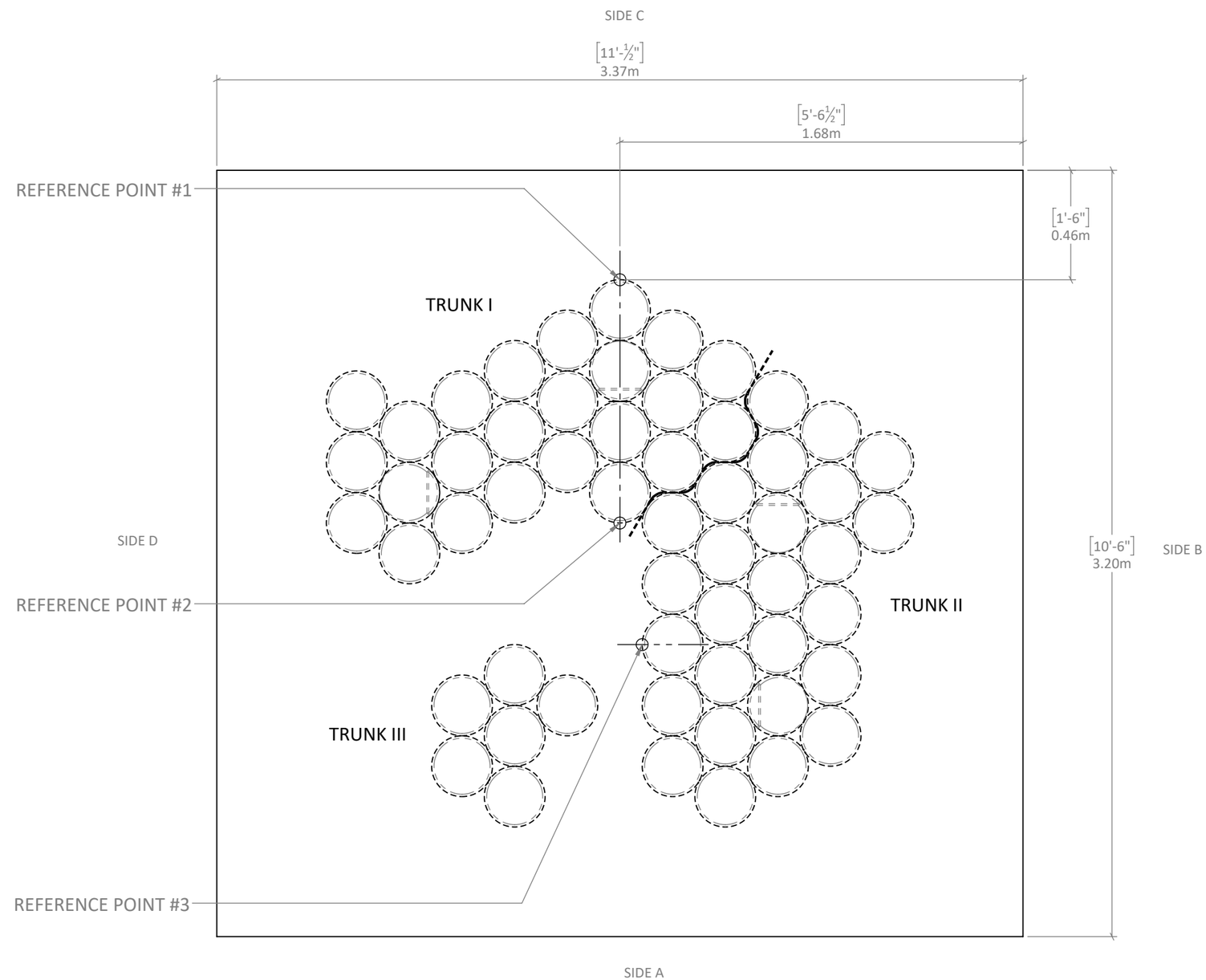

FOOTING PLAN VIEW

PROPERTY OF EARTHSCAPE PLAY INC. - DO NOT COPY. DO NOT DISTRIBUTE.

STEP 3 - EXCAVATE FOR CONCRETE PAD

Excavate area and prepare as per Concrete Placement Detail SD-001D on this sheet.

The foundation detail provided in these instructions has been developed assuming typical soil conditions specified in General Notes. If the subgrade encountered does not meet these conditions, the subgrade must be improved or revisions made to this detail. Revisions to the detail are the responsibility of the installer and it is strongly recommended any changes be reviewed and approved by a licensed professional engineer.

FOUNDATION NOTES:

1. SEE "GENERAL NOTES" SHEET FOR GENERAL NOTES.
2. TOP OF CONCRETE TO BE SET AT 300mm [12"] BELOW TOP OF SURFACING UNO.
3. SLAB TO BEAR ON MATERIAL BELOW THE FROST DEPTH, OR ALTERNATIVELY ON 300mm [12"] OF FREE DRAINING AGGREGATE, COMPACTED TO 98% SPDD.
4. CROSS SECTION ONLY. SEE PROJECT DRAWINGS FOR FOUNDATION SIZE, LAYOUT AND ADDITIONAL REBAR.

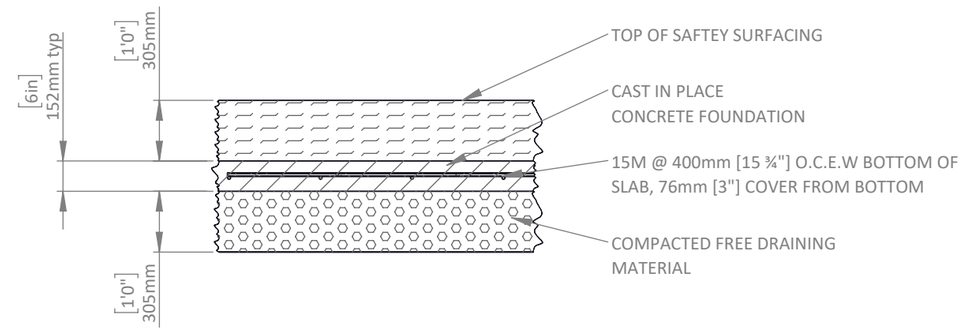

CONCRETE FOUNDATION DETAIL SD-001D

STEP 4 - POUR CONCRETE PAD

Pour concrete pad as per Concrete Placement Detail SD-001D on this sheet.
Ensure top of concrete is 300mm [12"] below finished safety surface.
Allow concrete to cure prior to proceeding to Step 5.

PROPERTY OF EARTHSCAPE PLAY INC. - DO NOT COPY. DO NOT DISTRIBUTE.

INSTALL DOCK BRACKETS

STEP 5 - INSTALL DOCK BRACKETS

Refer to Plan View drawing on this page for install positions of the Dock Brackets. Note the orientation and identify logs to receive Dock Brackets.

Identify the flat face cut into the base of indicated logs and install dock brackets such that the vertical of the dock bracket sits flush against it, with no portion protruding out from the uncut face of the log. The horizontal of the dock bracket should sit flush with the base of the Stepper Cluster L5 extending away from the log. See Detail A.

Fasten each dock bracket to the log using (4) Assy SK A2 8x100mm SS screws.

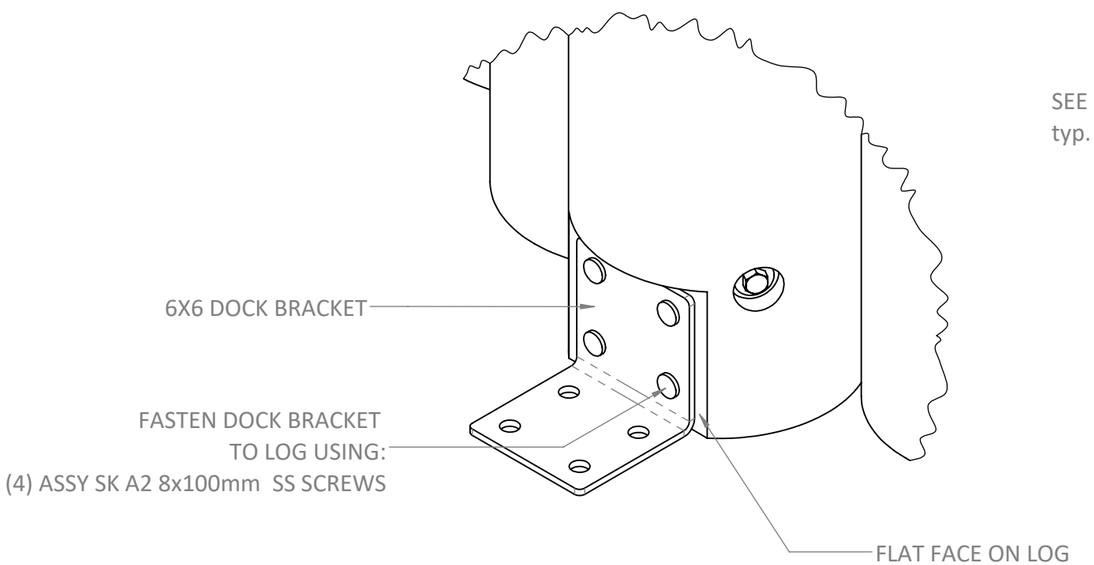

DETAIL A

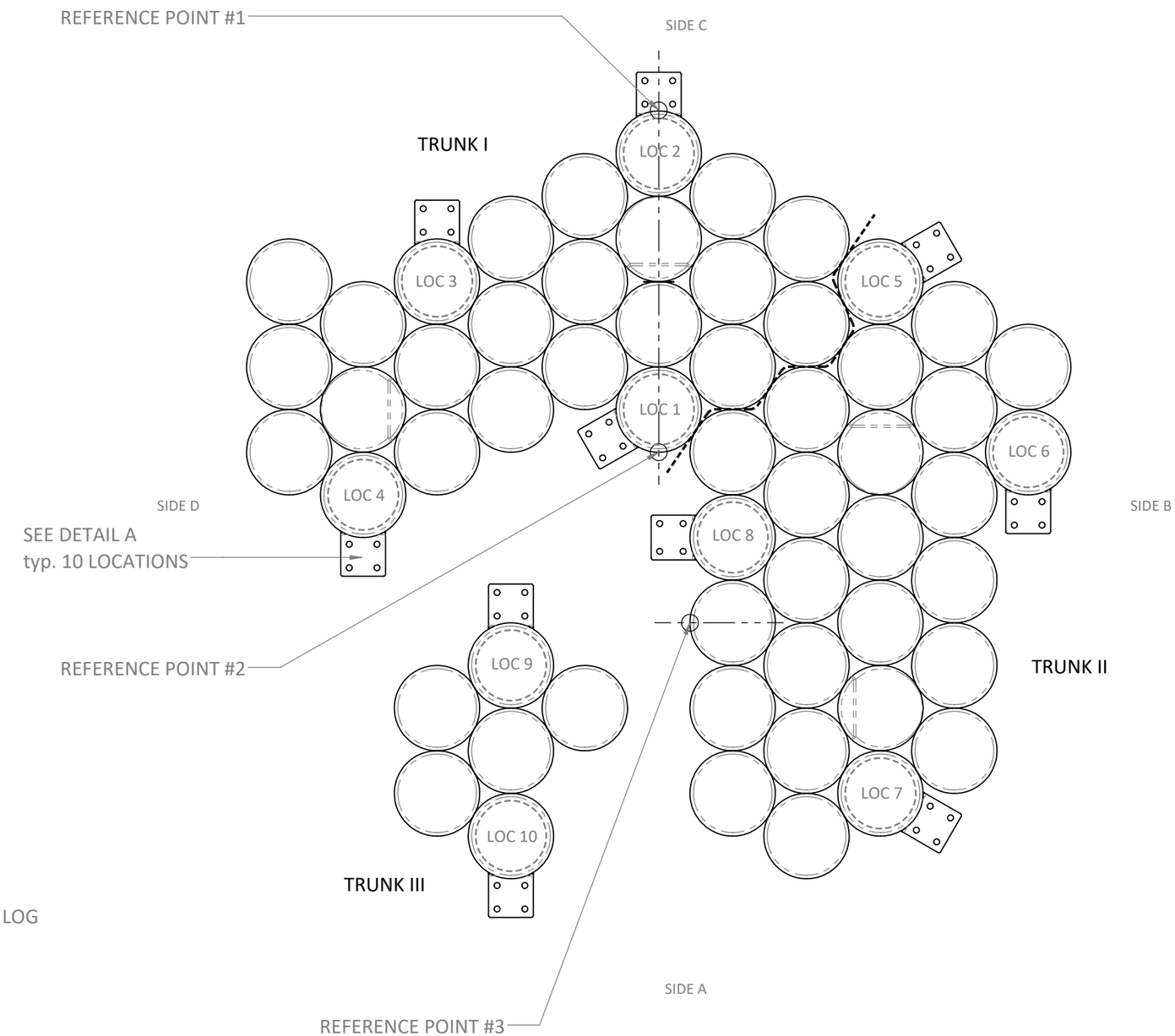

PLAN VIEW

PROPERTY OF EARTHSCAPE PLAY INC. - DO NOT COPY. DO NOT DISTRIBUTE.

SECURE STEPPER CLUSTER ON PAD

STEP 6 - SECURE STEPPER CLUSTER TO CONCRETE PAD

Ensure shipping dunnage has been removed from all Trunks.

Position the three Trunks of Stepper Cluster M4 on concrete pad P01 as per plan view on this sheet, using Reference Points marked on Stepper Cluster M4 and on site. Ensure Trunks I and II are as tightly aligned as possible.

Anchor the Dock Brackets to the concrete pad as per Detail B on this sheet. Total of 10 locations.

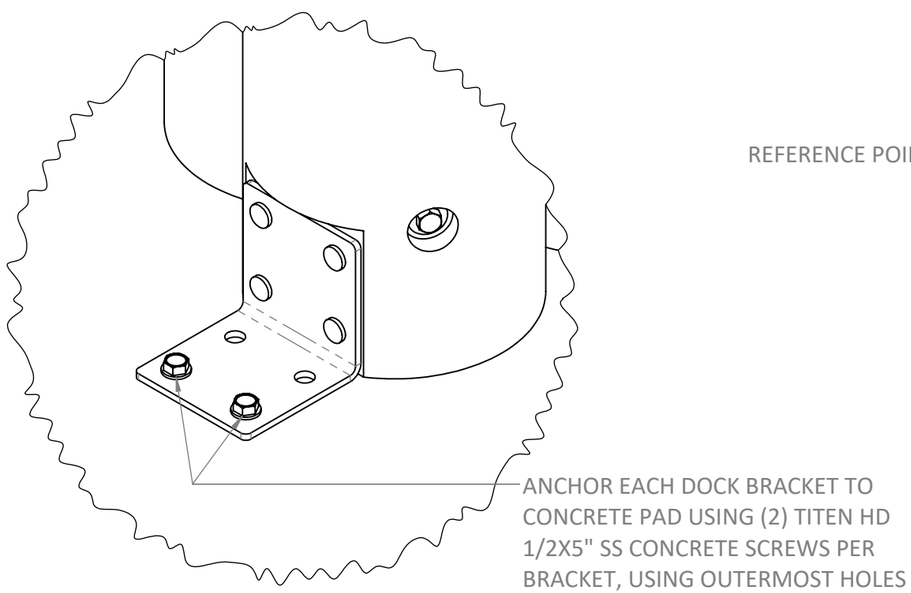

DETAIL B

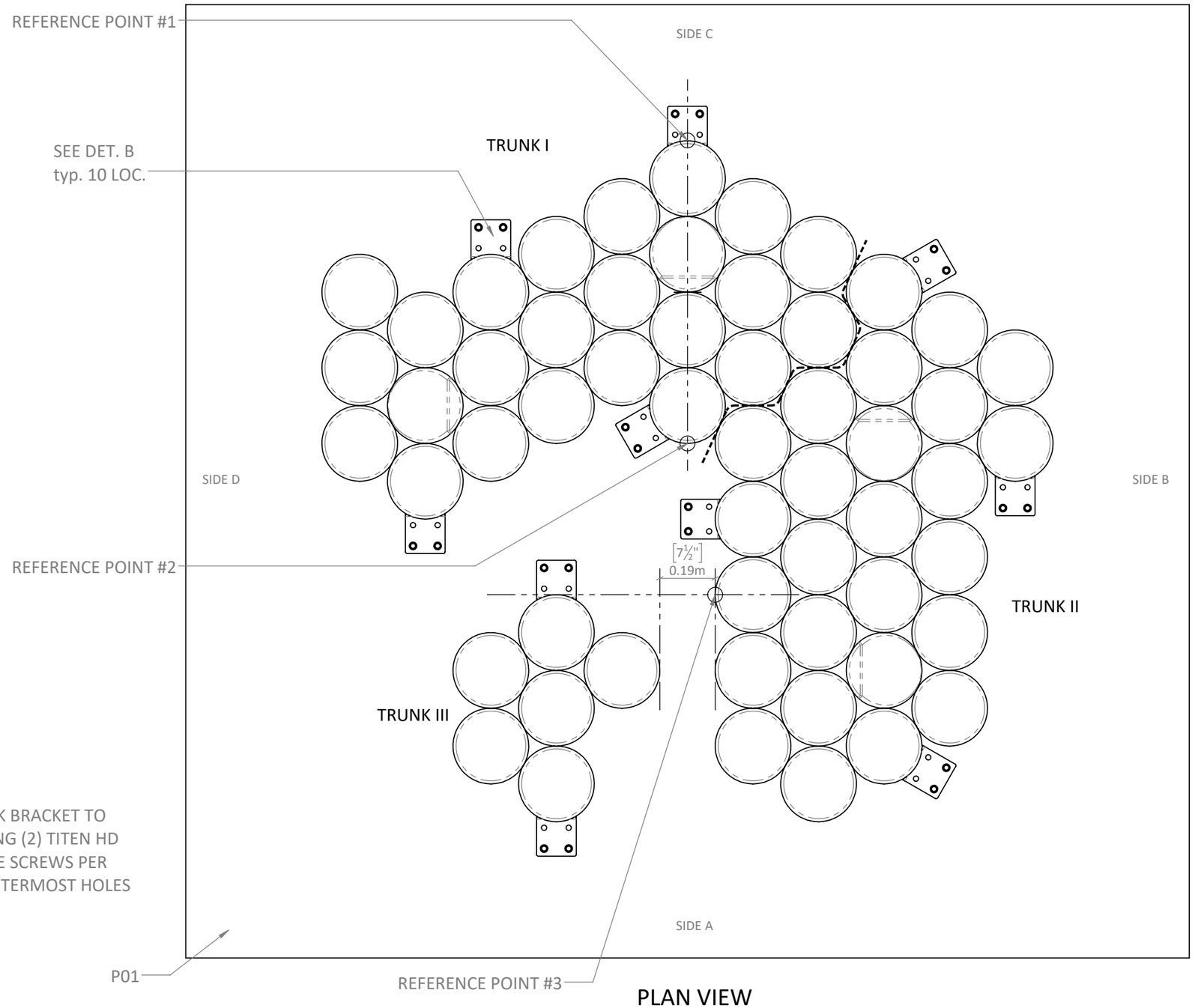

PLAN VIEW

PROPERTY OF EARTHSCAPE PLAY INC. - DO NOT COPY. DO NOT DISTRIBUTE.

GENERAL NOTES

STEPPER CLUSTER M4

FOR CANADIAN INSTALLATION SITES USE THESE NOTES

GENERAL NOTES

1. THIS DRAWING IS THE PROPERTY OF EARTHSCAPE. DO NOT COPY OR DISTRIBUTE WITHOUT PERMISSION.
2. EARTHSCAPE RESERVES OWNERSHIP OF ALL DRAWINGS, SPECIFICATIONS, AND OTHER DOCUMENTS, INCLUDING THOSE IN ELECTRONIC FORM, AUTHORED BY EARTHSCAPE. UPON SIGNING CONTRACT, EARTHSCAPE GRANTS THE OWNER LIMITED LICENSE TO USE THE INSTRUMENTS OF SERVICE SOLELY FOR USING AND MAINTAINING, OR ADDING TO THE PROJECT
3. ENGINEERING AND STRUCTURAL REVIEW: EARTHSCAPE PROVIDES STAMPED DRAWINGS AND/OR STRUCTURAL LOAD TESTING FOR ONTARIO, AS REQUIRED BY CSA Z614. LOCAL ENGINEERING APPROVAL FOR JURISDICTIONS OUTSIDE ONTARIO, IF REQUIRED, TO BE PROVIDED BY OTHERS.
4. EARTHSCAPE DESIGNS AND ENGINEERS FOR A FROST PENETRATION DEPTH OF 1200mm. SLAB ON GRADE CONSTRUCTION IS SUBJECT TO FROST MOVEMENTS. FREE DRAINING SOIL UNDER THE FOOTING IS USED TO MINIMIZE FROST EFFECTS. OVERALL TOWER/SLAB MOVEMENT MAY OCCUR.
5. INSPECTION AND TESTING: INSPECTION, TESTING (INCLUDING CONCRETE TESTING), PRE-CONSTRUCTION SURVEYS TO BE COMPLETED BY OTHERS.
6. SURFACING: WHEN AN IMPACT-ABSORBING SURFACE MATERIAL IS REQUIRED, IT MUST COMPLY WITH CSA Z614 (MOST RECENT EDITION) FOR THE DEFINED FALL HEIGHT OF THE EQUIPMENT SPECIFIED IN DRAWINGS BY EARTHSCAPE OR A CONTRACTUALLY OBLIGATED CRITICAL HEIGHT SPECIFIED IN ADVANCE. ENSURE USE ZONES, SAFETY ZONES, AND/OR PROTECTIVE SURFACING ZONES AROUND ALL PLAY EQUIPMENT ARE COMPLIANT WITH CSA Z614 (MOST RECENT EDITION) - BY OTHERS.
7. SURVEY AND FACILITIES: SURVEY WORK INCLUDING BENCHMARKS, LINES AND LEVELS, PRE-CONSTRUCTION SURVEY, AS-BUILT DRAWINGS BY OTHERS
8. THESE DRAWINGS ARE INTENDED TO BE PRINTED AT 11" X 17" PAGE SIZE. DO NOT SCALE
9. ALL MEASUREMENTS ARE IN METRES (m) UNLESS OTHERWISE STATED
10. EQUIPMENT SHALL COMPLY WITH THE REQUIREMENTS OF CAN/CSA-Z614 (MOST RECENT EDITION) "CHILDREN'S PLAYSPACES AND EQUIPMENT"
11. VISUAL DETAILS INCLUDING BUT NOT LIMITED TO: NET SPACING, ROPE APPEARANCE AND COLOURS ARE FOR CONCEPTUAL PURPOSES ONLY
12. ALWAYS WEAR PROPER PPE AND FOLLOW SAFE PRACTICES.
13. ALL WORK SHALL BE COMPLETED IN ACCORDANCE WITH THE OCCUPATIONAL HEALTH AND SAFETY ACT.
14. CONTRACTOR IS RESPONSIBLE FOR CONFIRMING ALL SITE CONDITIONS AND REPORTING DISCREPENCIES TO EARTHSCAPE IMMEDIATELY.
15. EARTHSCAPE IS NOT RESPONSIBLE FOR THIRD PARTY USE OF THESE DRAWINGS

FASTENERS:

1. METRIC/IMPERIAL DIAMETER CONVERSIONS OF TYPICAL SIZES:
    1. 8mm=5/16", 10mm=3/8", 12mm=1/2", 25mm=1"
    2. ROUND UP TO NEAREST STANDARD LENGTH FOR MANUFACTURER
2. ALL FASTENERS ARE TO BE STAINLESS STEEL (UNLESS OTHERWISE NOTED)
3. ALL BOLT HOLES SHALL BE PRE-DRILLED AND SHALL BE NOT LESS THAN 1mm AND NOT GREATER THAN 2mm LARGER THAN THE NOMINAL HOLE DIAMETER
4. FOR PARTIALLY THREADED SCREWS, EMBED FULL THREAD INTO SECONDARY MEMBER OR TO A DEPTH AS SPECIFIED ON DRAWINGS.
5. WHERE PRE-DRILLING OF SCREWS IS RECOMMENDED BY THE SCREW MANUFACTURER, HOLE DIAMETER TO BE STRICTLY AS PER MANUFACTURER'S INSTRUCTIONS.
6. DO NOT USE IMPACT DRILLS FOR SCREW INSTALLATION.
7. DO NOT USE A HAMMER TO ENGAGE THE FASTENER WITH THE WOOD.
8. ALL FASTENERS TO BE INSTALLED AS POSITIONED ON DRAWINGS.
9. ALL BOLTED CONNECTIONS ARE TO BE SECURED USING VIBRA-TITE "VC-3" THREAD-LOCKING FLUID OR EQUIVILENT

EXCAVATION AND BACKFILL

1. STRIP ALL TOP SOIL, PAVING, AND DELETERIOUS MATERIAL FROM UNDER FOOTINGS.
2. LOCATE ALL SERVICES PRIOR TO COMPLETING EXCAVATION.
3. ALL FOOTINGS SHALL BE PLACED AT A MINIMUM OF 1200mm BELOW GRADE UNLESS OTHERWISE NOTED ON THE DRAWINGS.
4. SUPPORTING SUBGRADE AND FILL TO HAVE A MINIMUM BEARING CAPACITY OF 150 kPa.
5. ALL FOOTINGS AND SLABS TO BE PLACED ON EITHER NATIVE GRAVEL/SAND/CLAY OR 150mm OF GRANULAR A COMPACTED TO A MINIMUM STANDARD PROCTOR DRY DENSITY OF 98%.
6. BENEATH 150mm TOP LAYER OF COMPACTED GRANULAR A, GRANULAR B FILL CAN BE USED AS REQUIRED PLACED IN MAXIMUM 200mm LIFTS, COMPACTED TO A STANDARD PROCTOR DRY DENSITY OF 96%.
7. CONTRACTOR IS RESPONSIBLE FOR SUPPORT OF EXCAVATIONS DURING CONSTRUCTION AS REQUIRED.

CONCRETE

1. ALL CONCRETE WORK AND MATERIALS SHALL BE IN ACCORDANCE WITH CAN/CSA A23.1/2
2. ALL REINFORCING STEEL TO BE IN ACCORDANCE WITH CAN/CSA A23.1/2 INCLUDING FABRICATION, DETAILING, LAP SPLICES, PLACEMENT, FIXING AND COVER.
3. REINFORCING STEEL SHALL COMPLY WITH CAN/CSA G40.18
4. DO NOT ADD WATER TO CONCRETE ONSITE.
5. ENSURE A MINIMUM COVER OF 75mm TO THE GROUND IN ALL BELOW GRADE CONCRETE.
6. CONCRETE MATERIAL TO BE:
    1. FOOTINGS: CLASS F-2 CONCRETE WITH A MINIMUM 28 DAY COMPRESSIVE STRENGTH OF 25 MPa, MAXIMUM WATER/CEMENT RATIO OF 0.55, MAXIMUM COARSE AGGREGATE SIZE OF 20mm, 4-7% AIR CONTENT, AND A MAXIMUM SLUMP OF 50-100mm.
    2. SLAB ON GRADE: CLASS C-2 CONCRETE WITH A MINIMUM 28 DAY COMPRESSIVE STRENGTH OF 32 MPa, MAXIMUM WATER/CEMENT RATIO OF 0.45, MAXIMUM COARSE AGGREGATE SIZE OF 20mm, 5-8% AIR CONTENT AND A MAXIMUM SLUMP OF 50-100mm.
7. CONCRETE REINFORCING TO DEFORMED MINIMUM YIELD STRENGTH OF 400 MPa
8. PIT RUN GRAVEL WILL NOT BE ACCEPTABLE.
9. ALL REINFORCING CHAIRS SHALL BE PLASTIC
10. ALL FORM OIL TO BE NON-STAINING MINERAL OIL, FREE OF KEROSENE.
11. WELDED WIRE MESH SHALL BE IN ACCORDANCE WITH ASTM A1064.
12. VIBRATE ALL CONCRETE TO ENSURE THAT CONCRETE IS FREE FROM VOIDS AND OTHER DEFECTS.
13. MOIST CURE ALL CONCRETE 7 DAYS.
14. IN HOT OR COLD WEATHER CONDITIONS TAKE ADDITIONAL PRECAUTIONS AS PER CAN/CSA A23.1/2.
15. UNLESS NOTED OTHERWISE, FASTEN ALL HARDWARE TO CONCRETE USING EITHER:
    1. SIMPSON STRONG TIE "TITEN HD" Ø½ X 5" SS CONCRETE SCREW
    2. THREADED ROD WITH SIMPSON STRONG TIE "SET 3G" OR HILTI "HY-200" EPOXY.
    3. REFER TO RESPECTIVE MANUFACTURER's INSTRUCTIONS FOR INSTALLATION PROCEDURE

FOR U.S. INSTALLATION SITES USE THESE NOTES

GENERAL NOTES

1. THIS DRAWING IS THE PROPERTY OF EARTHSCAPE. DO NOT COPY OR DISTRIBUTE WITHOUT PERMISSION.
2. EARTHSCAPE RESERVES OWNERSHIP OF ALL DRAWINGS, SPECIFICATIONS, AND OTHER DOCUMENTS, INCLUDING THOSE IN ELECTRONIC FORM, AUTHORED BY EARTHSCAPE. UPON SIGNING CONTRACT, EARTHSCAPE GRANTS THE OWNER LIMITED LICENSE TO USE THE INSTRUMENTS OF SERVICE SOLELY FOR USING AND MAINTAINING, OR ADDING TO THE PROJECT
3. ENGINEERING AND STRUCTURAL REVIEW: EARTHSCAPE PROVIDES STAMPED DRAWINGS AND/OR STRUCTURAL LOAD TESTING FOR ONTARIO, AS REQUIRED BY ASTM F-1487-17. LOCAL ENGINEERING APPROVAL FOR JURISDICTIONS OUTSIDE ONTARIO, IF REQUIRED, TO BE PROVIDED BY OTHERS.
4. EARTHSCAPE DESIGNS AND ENGINEERS FOR A FROST PENETRATION DEPTH OF 48". SLAB ON GRADE CONSTRUCTION IS SUBJECT TO FROST MOVEMENTS. FREE DRAINING SOIL UNDER THE FOOTING IS USED TO MINIMIZE FROST EFFECTS. OVERALL TOWER/SLAB MOVEMENT MAY OCCUR.
5. INSPECTION AND TESTING: INSPECTION, TESTING (INCLUDING CONCRETE TESTING), PRE-CONSTRUCTION SURVEYS TO BE COMPLETED BY OTHERS.
6. SURFACING: WHEN AN IMPACT-ABSORBING SURFACE MATERIAL IS REQUIRED, IT MUST COMPLY WITH ASTM F-1292 (MOST RECENT EDITION) FOR THE DEFINED FALL HEIGHT OF THE EQUIPMENT SPECIFIED IN DRAWINGS BY EARTHSCAPE OR A CONTRACTUALLY OBLIGATED CRITICAL HEIGHT SPECIFIED IN ADVANCE. ENSURE USE ZONES, SAFETY ZONES, AND/OR PROTECTIVE SURFACING ZONES AROUND ALL PLAY EQUIPMENT ARE COMPLIANT WITH ASTM F-1292 (MOST RECENT EDITION) - BY OTHERS.
7. SURVEY AND FACILITIES: SURVEY WORK INCLUDING BENCHMARKS, LINES AND LEVELS, PRE-CONSTRUCTION SURVEY, AS-BUILT DRAWINGS BY OTHERS
8. THESE DRAWINGS ARE INTENDED TO BE PRINTED AT 11" X 17" PAGE SIZE. DO NOT SCALE
9. ALL MEASUREMENTS ARE IN FEET-INCHES UNLESS OTHERWISE STATED
10. EQUIPMENT SHALL COMPLY WITH THE REQUIREMENTS OF ASTM F1487-17 "STANDARD CONSUMER SAFETY PERFORMANCE SPECIFICATION FOR PLAYGROUND EQUIPMENT"
11. VISUAL DETAILS INCLUDING BUT NOT LIMITED TO: NET SPACING, ROPE APPEARANCE AND COLOURS ARE FOR CONCEPTUAL PURPOSES ONLY
12. ALWAYS WEAR PROPER PPE AND FOLLOW SAFE PRACTICES.
13. ALL WORK SHALL BE COMPLETED IN ACCORDANCE WITH THE OCCUPATIONAL HEALTH AND SAFETY ACT.
14. CONTRACTOR IS RESPONSIBLE FOR CONFIRMING ALL SITE CONDITIONS AND REPORTING DISCREPENCIES TO EARTHSCAPE IMMEDIATELY.
15. EARTHSCAPE IS NOT RESPONSIBLE FOR THIRD PARTY USE OF THESE DRAWINGS

FASTENERS

1. METRIC/IMPERIAL DIAMTER CONVERSIONS:
    1. 8mm=5/16", 10mm=3/8", 12mm=1/2", 25mm=1"
    2. ROUND UP TO NEAREST STANDARD LENGTH FOR MANUFACTURER
2. ALL FASTENERS ARE TO BE STAINLESS STEEL (UNLESS OTHERWISE NOTED)
3. ALL BOLT HOLES SHALL BE PRE-DRILLED AND SHALL BE NOT LESS THAN 3/64" AND NOT GREATER THAN 5/64" LARGER THAN THE NOMINAL HOLE DIAMETER
4. FOR PARTIALLY THREADED SCREWS, EMBED FULL THREAD INTO SECONDARY MEMBER OR TO A DEPTH AS SPECIFIED ON DRAWINGS.
5. WHERE PRE-DRILLING OF SCREWS IS RECOMMENDED BY THE SCREW MANUFACTURER, HOLE DIAMETER TO BE STRICTLY AS PER MANUFACTURER'S RECOMMENDATIONS.
6. DO NOT USE IMPACT DRILLS FOR SCREW INSTALLATION.
7. DO NOT USE A HAMMER TO ENGAGE THE FASTENER WITH THE WOOD.
8. ALL FASTENERS TO BE INSTALLED AS POSITIONED ON SHOP DRAWINGS.
9. ALL BOLTED CONNECTIONS ARE TO BE SECURED USING VIBRA-TITE "VC-3" THREAD-LOCKING FLUID OR EQUIVILENT

EXCAVATION AND BACKFILL

1. STRIP ALL TOP SOIL, PAVING, AND DELETERIOUS MATERIAL FROM UNDER FOOTINGS.
2. LOCATE ALL SERVICES PRIOR TO COMPLETING EXCAVATION.
3. ALL FOOTINGS SHALL BE PLACED AT A MINIMUM OF 4' BELOW GRADE UNLESS OTHERWISE NOTED ON THE DRAWINGS.
4. SUPPORTING SUBGRADE AND FILL TO HAVE A MINIMUM BEARING CAPACITY OF 3000PSF.
5. ALL FOOTINGS AND SLABS TO BE PLACED ON EITHER NATIVE GRAVEL/SAND/CLAY OR 6" OF GRANULAR A COMPACTED TO A MINIMUM STANDARD PROCTOR DRY DENSITY OF 98%.
6. BENEATH 6" TOP LAYER OF COMPACTED GRANULAR A, GRANULAR B FILL CAN BE USED AS REQUIRED PLACED IN MAXIMUM 8" LIFTS, COMPACTED TO A STANDARD PROCTOR DRY DENSITY OF 96%.
7. CONTRACTOR IS RESPONSIBLE FOR SUPPORT OF EXCAVATIONS DURING CONSTRUCTION AS REQUIRED.

CONCRETE

1. ALL CONCRETE WORK AND MATERIALS SHALL BE IN ACCORDANCE WITH ACI-301
2. ALL REINFORCING STEEL TO BE IN ACCORDANCE WITH ASTM A615 AND ACI-301 INCLUDING FABRICATION, DETAILING, LAP SPLICES, PLACEMENT, FIXING AND COVER.
3. REINFORCING STEEL SHALL COMPLY WITH ASTM A615
4. DO NOT ADD WATER TO CONCRETE ONSITE.
5. ENSURE A MINIMUM COVER OF 3" TO THE GROUND IN ALL BELOW GRADE CONCRETE.
6. CONCRETE MATERIAL TO BE:
    1. FOOTINGS AND SLABS: CONCRETE WITH A MINIMUM 28 DAY COMPRESSIVE STRENGTH OF 4000 PSI, MAXIMUM WATER/CEMENT RATIO OF 0.50, MAXIMUM COARSE AGGREGATE SIZE OF 3/4", 4-7% AIR CONTENT (WHERE CONCRETE PLACED ABOVE FROST), AND A MAXIMUM SLUMP OF 2 - 4 INCHES.
7. CONCRETE REINFORCING TO DEFORMED MINIMUM YIELD STRENGTH OF 58000 PSI
8. PIT RUN GRAVEL WILL NOT BE ACCEPTABLE.
9. ALL REINFORCING CHAIRS SHALL BE PLASTIC
10. ALL FORM OIL TO BE NON-STAINING MINERAL OIL, FREE OF KEROSENE.
11. WELDED WIRE MESH SHALL BE IN ACCORDANCE WITH ASTM A1064.
12. VIBRATE ALL CONCRETE TO ENSURE THAT CONCRETE IS FREE FROM VOIDS AND OTHER DEFECTS.
13. MOIST CURE ALL CONCRETE 7 DAYS.
14. IN HOT OR COLD WEATHER CONDITIONS TAKE ADDITIONAL PRECAUTIONS AS PER ACI 305 OR 306 RESPECTIVELY.
15. UNLESS NOTED OTHERWISE, FASTEN ALL HARDWARE TO CONCRETE USING EITHER:
    1. SIMPSON STRONG TIE "TITEN HD" Ø½ X 5" SS CONCRETE SCREW
    2. THREADED ROD WITH SIMPSON STRONG TIE "SET 3G" OR HILTI "HY-200" EPOXY
    3. REFER TO RESPECTIVE MANUFACTURER'S INSTRUCTIONS FOR INSTALLATION PROCEDURE

PROPERTY OF EARTHSCAPE PLAY INC. - DO NOT COPY. DO NOT DISTRIBUTE.

INSTALLATION INSTRUCTIONS

EARTHSCAPE COLLECTIONS

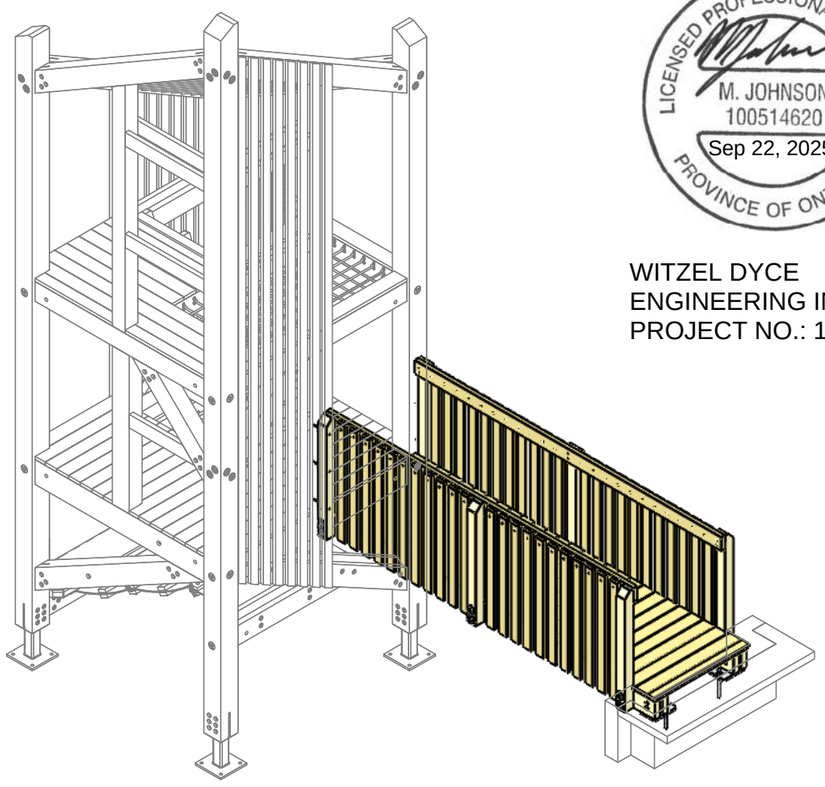

LICENSED PROFESSIONAL ENGINEER
M. JOHNSON
100514620
Sep 22, 2025
PROVINCE OF ONTARIO

WITZEL DYCE
ENGINEERING INC.
PROJECT NO.: 12936-165

MODIFIED TIMBER BRIDGE 12'

THESE INSTRUCTIONS APPLY TO THE FOLLOWING VERSIONS OF THIS PRODUCT:

1209039 - MODIFIED TIMBER BRIDGE 12'

PROJECT NUMBER: ESC0499
DESIGNED FOR: HURLD PARK
TO BE INSTALLED IN: WOBURN, MA

NOTE: COLOURS SHOWN ARE REPRESENTATIONAL AND MAY NOT BE THE SAME AS THOSE OF THE SUPPLIED PRODUCT

FOR CSA AND ASTM SPECIFICATIONS AND GENERAL NOTES SEE MAIN STRUCTURE INSTALLATION PACKAGE

DATE DOCUMENT RELEASED 2025-09-18
DOCUMENT NUMBER: 1209450-R1

PROPERTY OF EARTHSCAPE PLAY INC. - DO NOT COPY. DO NOT DISTRIBUTE.

PLEASE READ ALL INSTRUCTIONS

Before starting to install this equipment be sure to read through and understand these instructions.

If you have any questions, contact your Earthscape Representative for assistance before proceeding.

MEASUREMENTS AND STANDARDS

Measurements have been provided in both metres and [feet-inches]. Ensure to follow standards noted for the location in which this play equipment is being installed. Those marked CSA are to be used in Canada and those marked ASTM to be used in the United States.

LIST OF ABBREVIATIONS

AYC = Alaskan Yellow Cedar
WRC = Western Red Cedar
DPS = Designated Play Surface
SS = Stainless Steel
HDG = Hot Dipped Galvanized
WWM = Welded Wire Mesh
TYP = Typical
C/W = Complete With
UNO = Unless Noted Otherwise
EWF = Engineered Wood Fiber
PIP = Poured-In-Place Rubber Surfacing
PT = Pressure Treated

TOOLS SUPPLIED WITH THIS PRODUCT

- No tools supplied

TOOLS THE INSTALLER NEEDS TO SUPPLY

- High torque drill
- Set of wood drill bits up to 1/2"
- T25 drive bit
- T40 drive bit
- Circular saw
- 1/2" Impact driver
- Socket set up to 1-1/8"
- Hammer Drill
- Concrete drill bit set up to and including size required by epoxy manufacturer to set 3/4" threaded rod 8" deep in concrete abutment
- Angle grinder (With course 24 grit sanding disks and metal cut off disks
- Transit or laser Level
- Rigging and lifting straps

EQUIPMENT THE INSTALLER NEEDS TO SUPPLY

- Machine to lift and position 400 kg [870 lb] pre-assembled wooden bridge.

INSTALLER CREW AND TIME REQUIRED

Number of people needed: 3
Typical total person-hours to install: 3

Time breakdown:
- 1 hours x 3 people to position and anchor the bridge in place

MATERIALS THE INSTALLER NEEDS TO SUPPLY

- Epoxy - Simpson Strong Tie "Set 3G" or Hilti "Hy-200"

WARNINGS

These instructions do not provide specific guidance on the use of tools or the lifting and moving heavy objects. It is assumed that competent people are installing this product who are familiar with using the tools and equipment required and are knowledgeable and skilled at lifting and positioning heavy objects.

PROPERTY OF EARTHSCAPE PLAY INC. - DO NOT COPY. DO NOT DISTRIBUTE.

MAKE SURE YOU HAVE ALL THE PARTS

Examine the equipment and ensure you have all the required parts listed in the table below.

PART IMAGE	ITEM NO.	PART NO.	DESCRIPTION	QTY.
SEE IMAGE THIS SHEET	1	1209039	PRE-ASSEMBLED MODIFIED WOODEN BRIDGE 12'	1
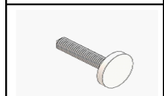	2	H16685	WOOD SCREW, WASHER HEAD M8X100, SS	4
	3	H16687	WOOD SCREW, WASHER HEAD M8X200, SS	6
	4	H20028	THREADED STUD 3/4"X 12" HDG	2
	5	H30080	WASHER 3/4" X 2" HDG	2
	6	H40046	HEX NUT 3/4-10 HDG	4

IMAGES OF FASTENERS IN THIS TABLE ARE REPRESENTATIONAL TO HELP IDENTIFY PARTS.

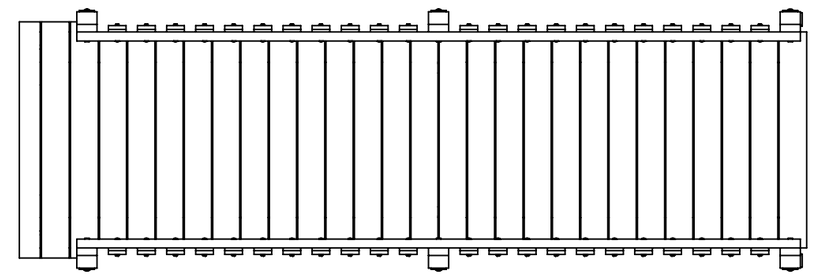

PLAN VIEW

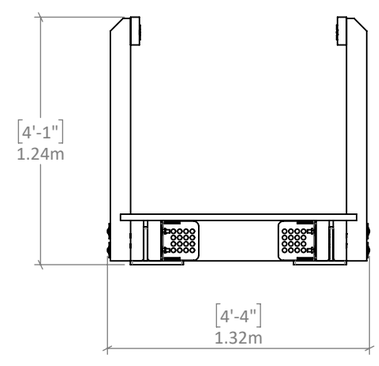

FRONT VIEW

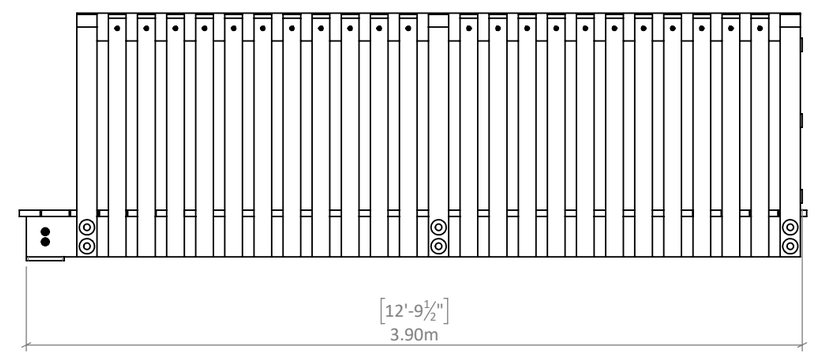

SIDE VIEW

TIMBER BRIDGE SHIPPED PRE-ASSEMBLED AS SHOWN
WEIGHT: 400 KG [870 LB]

PROPERTY OF EARTHSCAPE PLAY INC. - DO NOT COPY. DO NOT DISTRIBUTE.

ABUTMENT DETAILS

ABUTMENT DETAILS OVERVIEW

Before installing the bridge ensure the concrete abutment is cured and matches the specifications shown on this sheet.

Concrete to be provided by installer.

REACTION LOADS

- DL = 250 lbs
- LL = 900 lbs
- Playground loading = 1500 lbs (not to be considered with live load
- SL = 650 lbs
- WL = 625 lbs (perp to bridge)
- EQ = 75 lbs (perp to bridge)

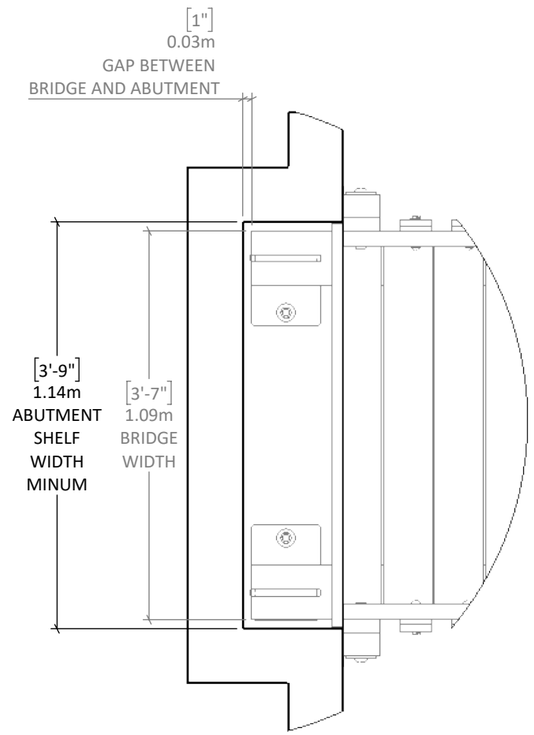

DETAIL A

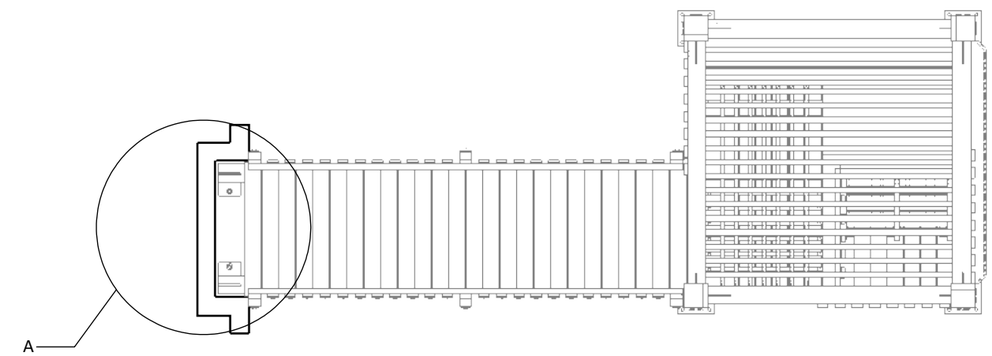

ABUTMENT PLAN VIEW

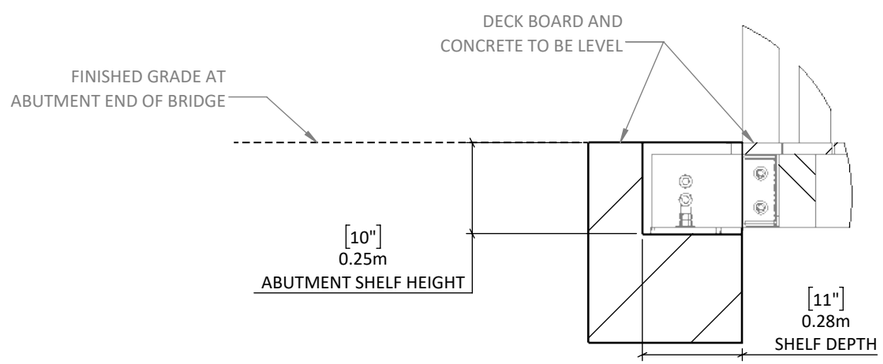

DETAIL B

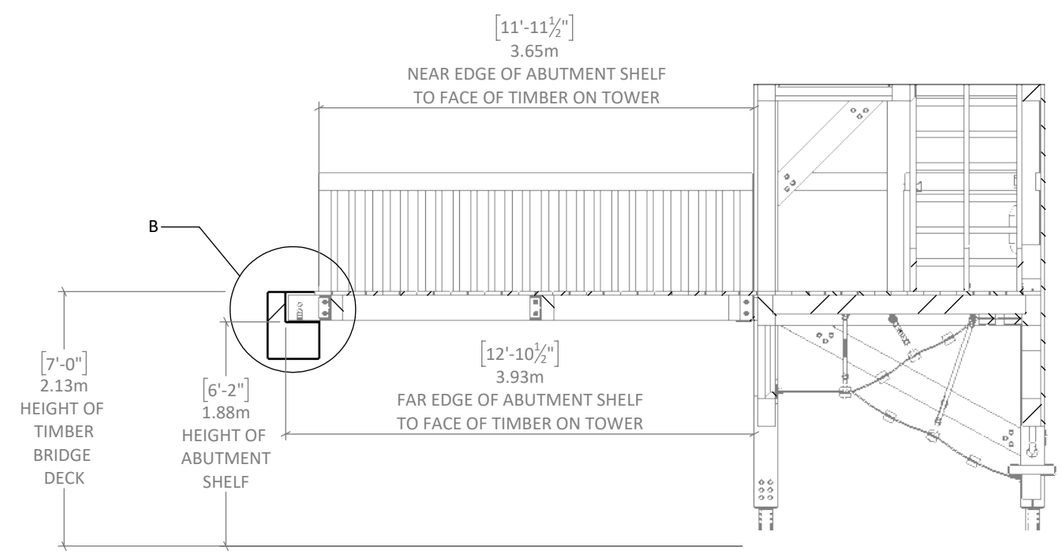

ABUTMENT LOCATION

PROPERTY OF EARTHSCAPE PLAY INC. - DO NOT COPY. DO NOT DISTRIBUTE.

PREP BRIDGE AND TOWER

MODIFIED TIMBER BRIDGE 12'

STEP 1 - CONFIRM WHERE THE ACCESSORY IS TO BE INSTALLED

Review the complete tower installation package to determine on which side this accessory is to be installed and what the finished product should look like.

STEP 2 - INSTALL BRIDGE PRIOR TO ANCHORING TOWERS TO FOUNDATION PAD

It might be necessary to make minor adjustments the position of the timber tower to suit the as-built bridge. Anchor tower after bridge has been installed. Ensure the tower opening is centered on the opening of the abutment, also the tower is parallel to the abutment face.

STEP 3 - PREP BRIDGE

Temporarily remove the end deckboards from both ends of bridge as per Figure 1. Make sure to note which end they came from and their orientation.

STEP 4 - ATTACH THE BRIDGE BRACKET TO TOWER

Attach the bridge bracket to the timber tower as shown in Section H-H.

STEP 5 - CONFIRM GAP BETWEEN TOWER AND ABUTMENT

Measure distance between the tower and the abutment concrete and compare to supplied bridge length. Pull tower away from concrete enough to be able to fit bridge between.

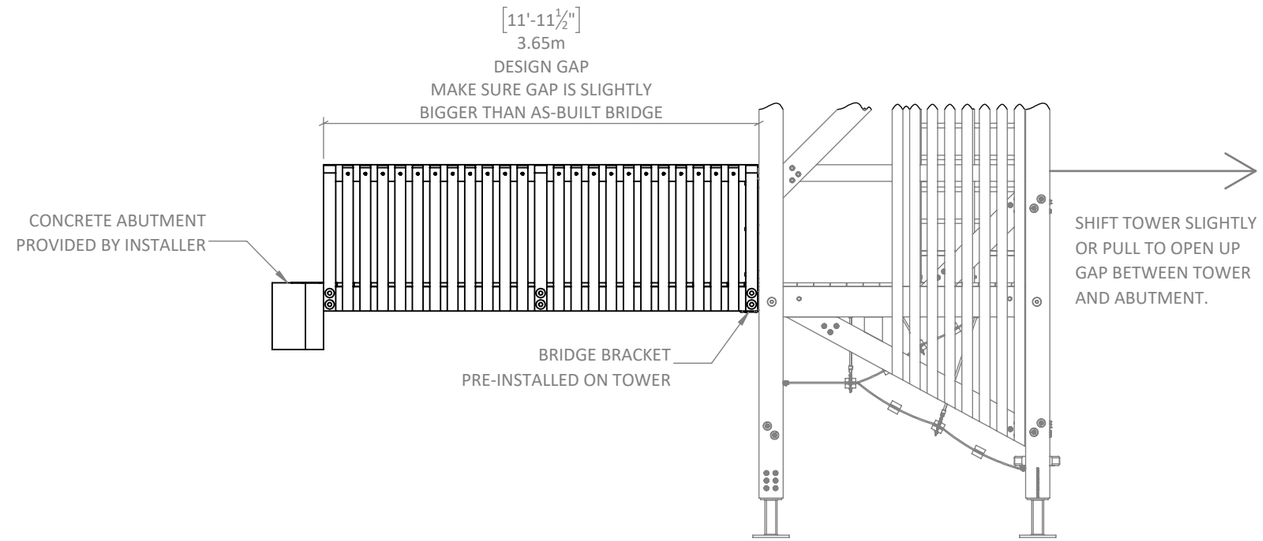

SIDE ELEVATION

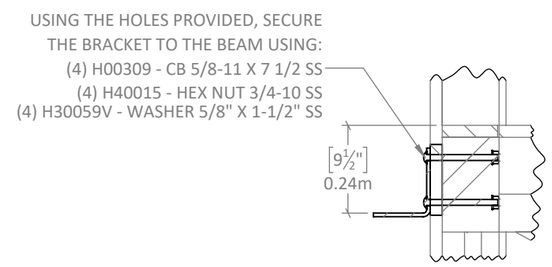

SECTION H-H

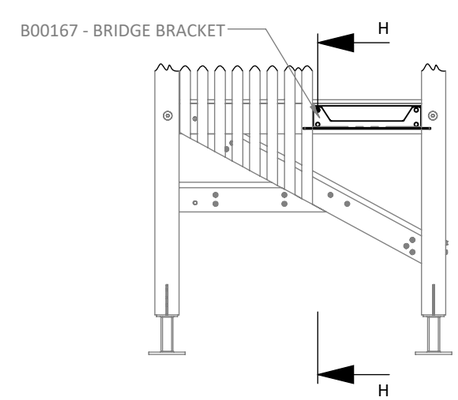

FRONT ELEVATION

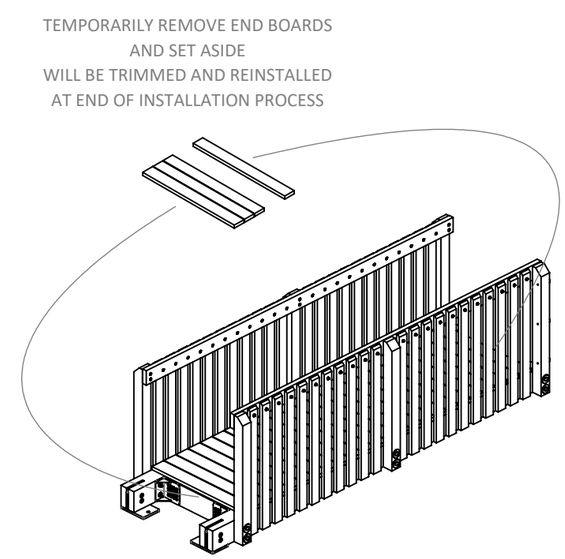

FIGURE 1

PROPERTY OF EARTHSCAPE PLAY INC. - DO NOT COPY. DO NOT DISTRIBUTE.

LIFT AND PLACE BRIDGE

MODIFIED TIMBER BRIDGE 12'

STEP 6 - LIFT AND PLACE BRIDGE

Lift bridge with appropriate equipment and move into position. Lower bridge on to the tower bracket and the concrete abutment. Ensure the bridge is centered in the tower opening and centered in the concrete abutment.

STEP 7 - ADJUST POSITION OF TOWERS

Draw the tower so the end of the bridge is tight to the tower and the bridge is sitting on the abutment. Ensure a gap is present from the end of the bridge to the concrete as shown in the plan view.

Make minor adjustments to the tower position to ensure both ends of the bridge are centered in the tower opening and the concrete abutment. Ensure the tower is tight to the end of the bridge.

STEP 8 - SECURE BRIDGE GUARDRAIL POSTS

Install screws through pre-drilled holes in the end guardrail posts into timber tower posts.

Pre-drill all screw holes as per general notes.

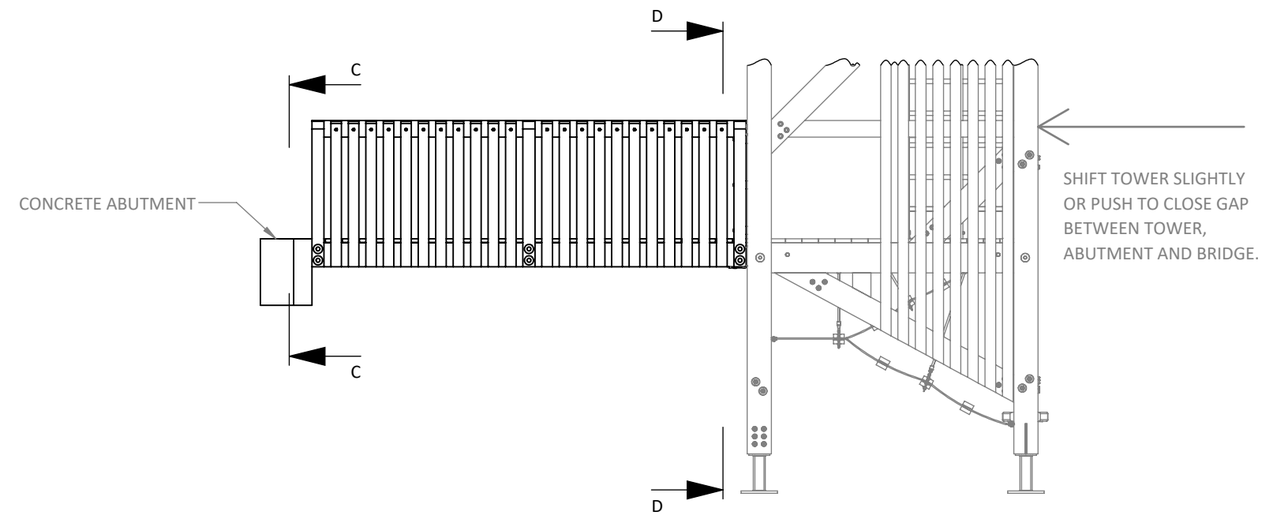

SIDE ELEVATION

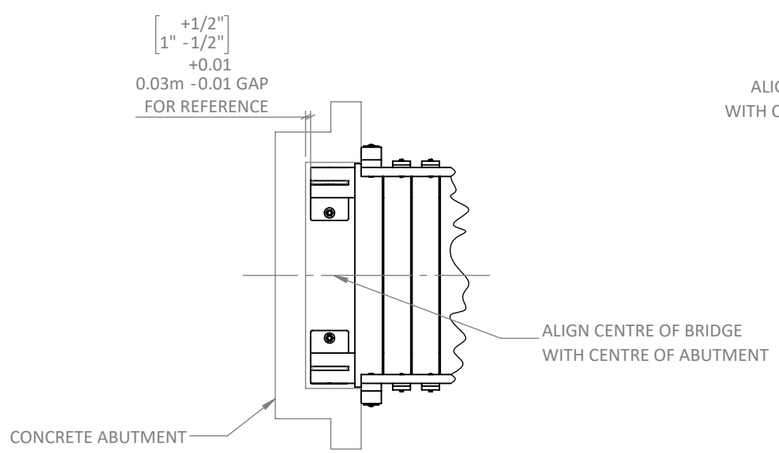

PLAN VIEW

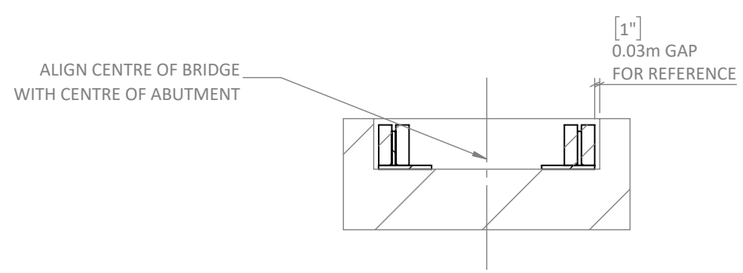

SECTION C-C
ABUTMENT SIDE

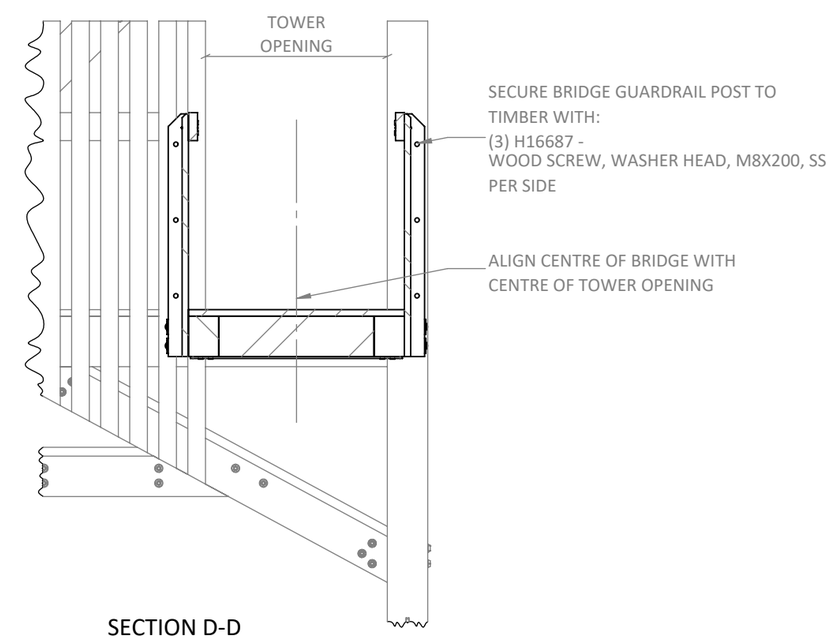

SECTION D-D
TOWER SIDE

PROPERTY OF EARTHSCAPE PLAY INC. - DO NOT COPY. DO NOT DISTRIBUTE.

STEP 9 - SECURE BRIDGE STRINGERS

Install screws through bottom of steel brackets into underside of bridge timber stringers.

Pre-drill all screw holes as per general notes in main installation package.

STEP 10 - SECURE BRIDGE TO ABUTMENT

Install threaded rod into concrete using epoxy, see general notes in the main installation package epoxy details. Cut and grind the top of the threaded rod after installation to ensure max two threads exposed.

Ensure a minimum threaded rod embedment depth of 6".

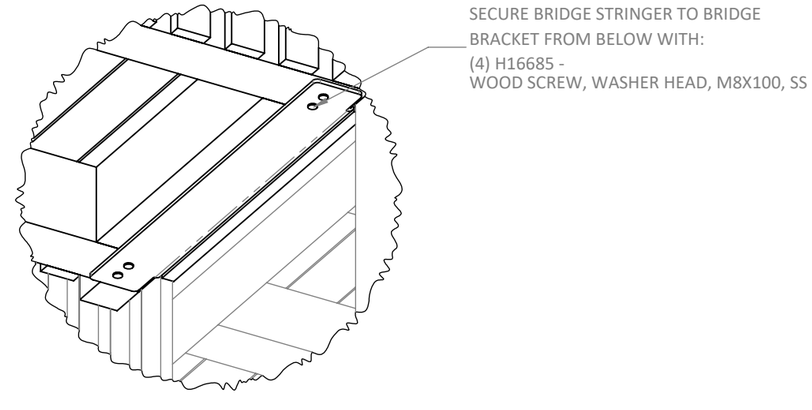

DETAIL E

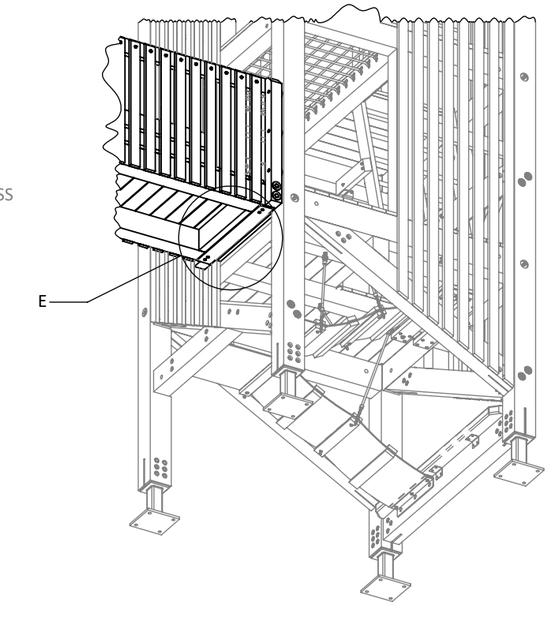

LOOKING UNDER BRIDGE

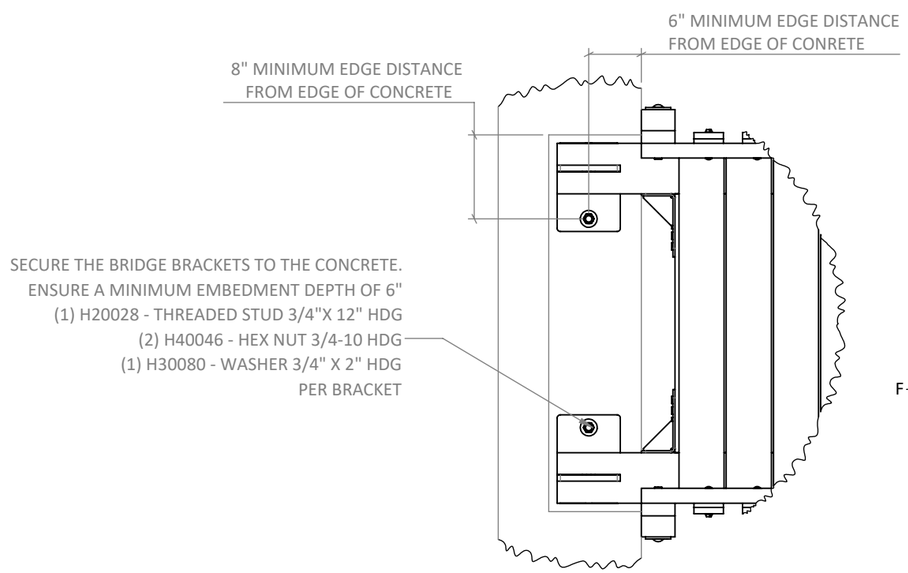

DETAIL F

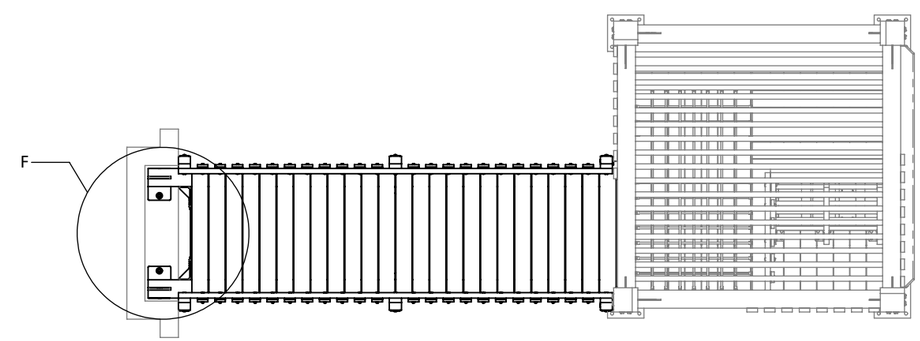

PLAN VIEW

PROPERTY OF EARTHSCAPE PLAY INC. - DO NOT COPY. DO NOT DISTRIBUTE.

REINSTALL DECKBOARDS

STEP 11 - REINSTALL DECKBOARDS AT TOWER

Trim the removed deckboards to suit the gap in decking between the bridge and tower.

Ensure a +/-6mm (1/4") gap between deckboards as per Detail K. Deckboards must not touch. Reinstall with the original screws.

STEP 12 - REINSTALL DECKBOARDS AT ABUTMENT

Trim the removed deckboards to suit the gap in decking between the bridge and the abutment. By design the deckboards are intended to be flush with the finished grade at the abutment.

Ensure a +/-6mm (1/4") gap between deckboards as per Detail J and L. Deckboards must not touch. Reinstall with the original screws.

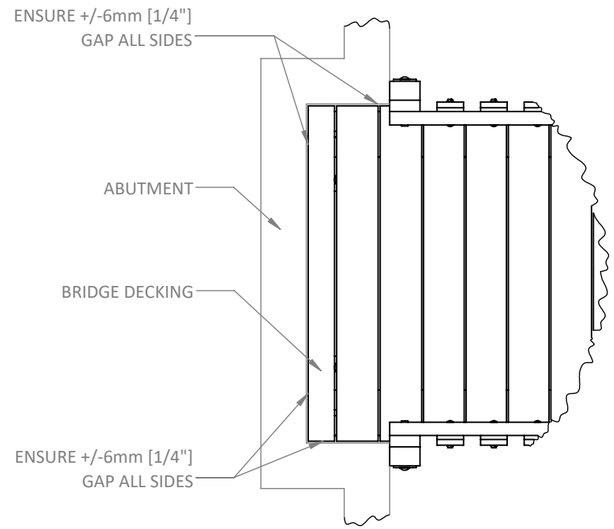

DETAIL L

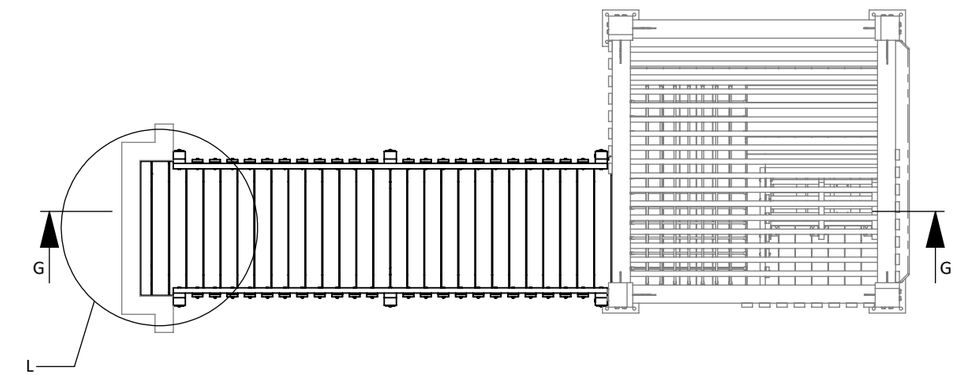

PLAN VIEW

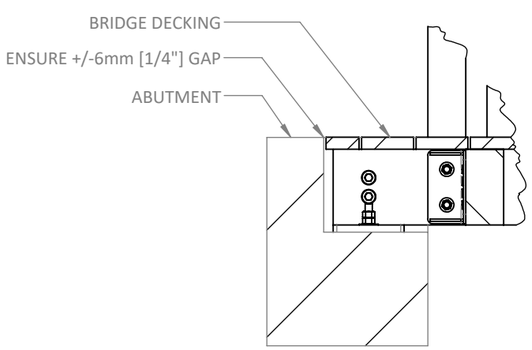

DETAIL J
DECKBOARDS AT ABUTMENT

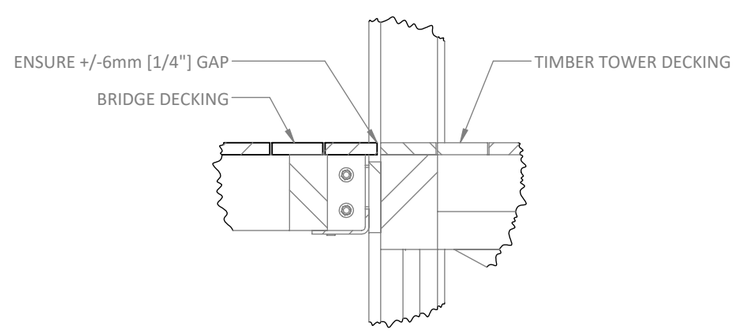

DETAIL K
DECKBOARDS AT TOWER

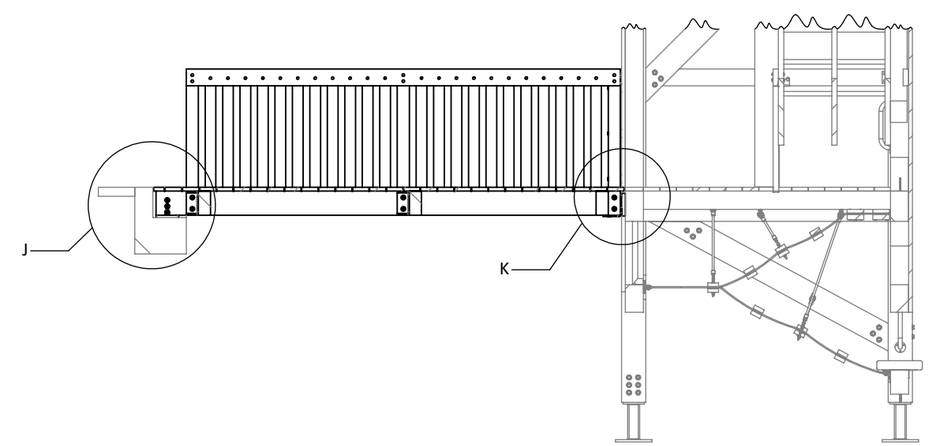

SECTION G-G

DATE DOCUMENT RELEASED 2025-09-18
DOCUMENT NUMBER: 1209450 - R1

PROPERTY OF EARTHSCAPE PLAY INC. - DO NOT COPY. DO NOT DISTRIBUTE.

INSTALLATION INSTRUCTIONS

EARTHSCAPE COLLECTIONS

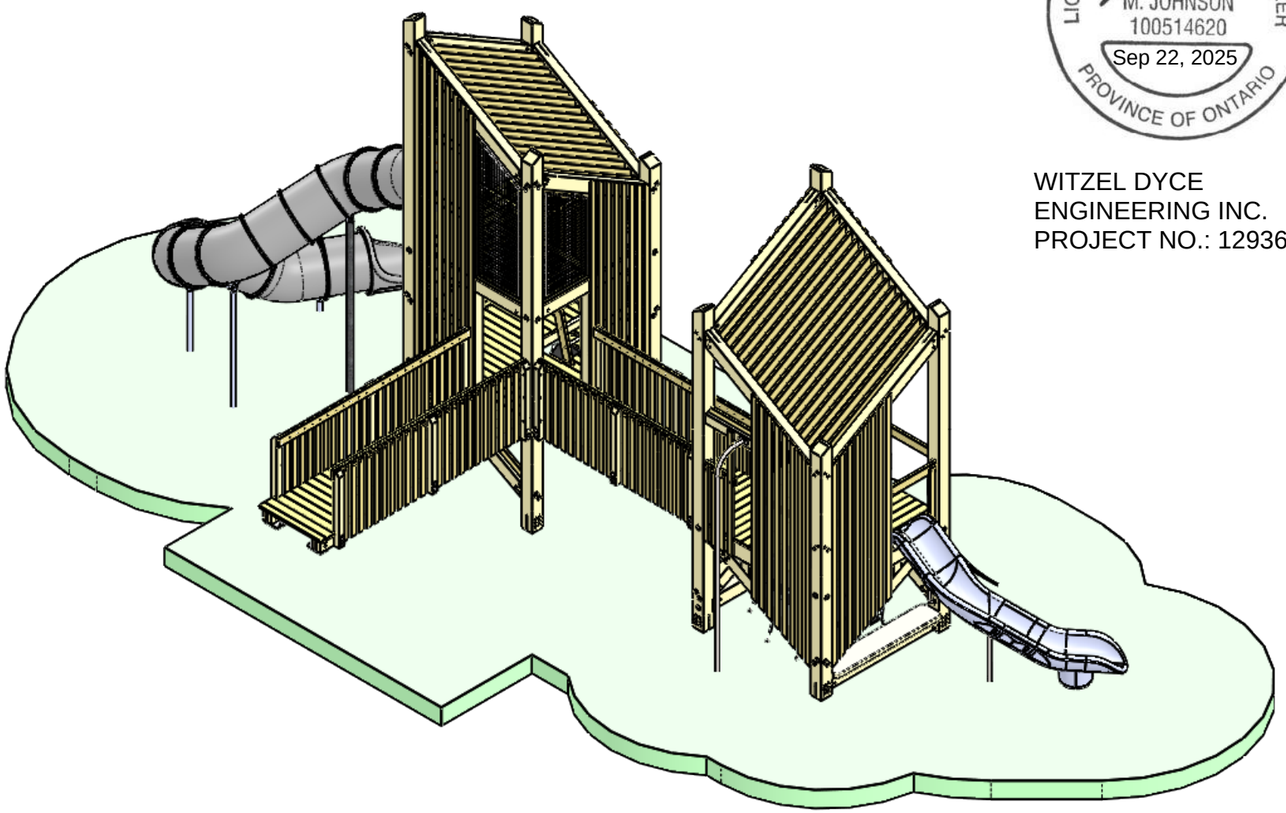

LICENSED PROFESSIONAL ENGINEER
M. JOHNSON
100514620
Sep 22, 2025
PROVINCE OF ONTARIO

WITZEL DYCE
ENGINEERING INC.
PROJECT NO.: 12936-165

COMBINED ASSEMBLY

THESE INSTRUCTIONS APPLY TO THE UNIQUE TOWER CONFIGURATION FOR:

PROJECT NUMBER: ESC0499
DESIGNED FOR: HURLD PARK
TO BE INSTALLED IN: WOBURN, MA

NOTE: COLOURS SHOWN ARE REPRESENTATIONAL AND MAY NOT BE THE SAME AS THOSE OF THE SUPPLIED PRODUCT

DATE DOCUMENT RELEASED 2025-09-18
DOCUMENT NUMBER: 1209315-R1

PROPERTY OF EARTHSCAPE PLAY INC. - DO NOT COPY. DO NOT DISTRIBUTE.

SPECIFICATIONS

INTENDED USER AGE GROUP: 5-12 y
MAXIMUM HEIGHT OF STRUCTURE: 24'0" ABOVE FINISHED PLAY SURFACE
MAXIMUM DESIGNATED FALL HEIGHT: 6'-8"
AREA OF SURFACING: 1420 ft²
APPROXIMATE AS SHIPPED WEIGHT:

- 1 LEVEL TIMBER TOWER - 4,350 LBS
- 2 LEVEL TIMBER TOWER - 5,500 LBS
- 10' WOODEN BRIDGE - 670 LBS
- 12' MODIFIED WOODEN BRIDGE - 870 LBS

RECOMMENDED INSTALLATION BUFFER

Play equipment requires a variety of offsets to other elements in a playground. The plan view on this page shows the minimum recommended area needed for installing this piece of play equipment by itself. Combining this play equipment with other pieces should be reviewed by a person with a Certified Playground Safety Inspector training.

The offset shown here includes a buffer beyond the ASTM requirements to account for fabrication and material variation.

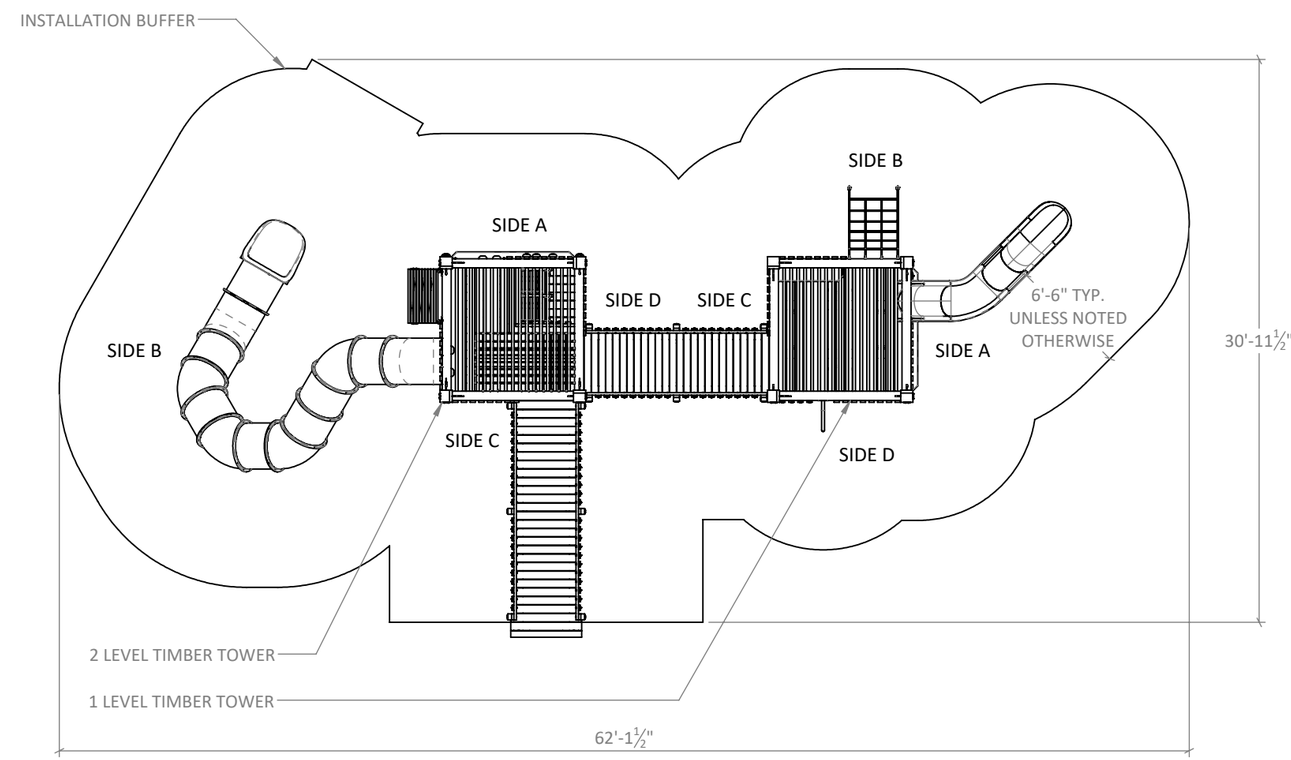

PROPERTY OF EARTHSCAPE PLAY INC. - DO NOT COPY. DO NOT DISTRIBUTE.

PLEASE READ ALL INSTRUCTIONS

Before starting to install this equipment be sure to read through and understand these instructions.

If you have any questions, contact your Earthscape Representative for assistance before proceeding.

Time, tools and materials noted on this sheet only cover the installation of the base timber tower. They do not include any of the add-ons. See separate installation packages to understand what additional time will be required.

MEASUREMENTS AND STANDARDS

Measurements have been provided in both metres and [feet-inches]. Ensure to follow standards noted for the location in which this play equipment is being installed. Those marked CSA are to be used in Canada and those marked ASTM to be used in the United States.

LIST OF ABBREVIATIONS

AYC = Alaskan Yellow Cedar
WRC = Western Red Cedar
DPS = Designated Play Surface
SS = Stainless Steel
HDG = Hot Dipped Galvanized
WWM = Welded Wire Mesh
TYP = Typical
C/W = Complete With
UNO = Unless Noted Otherwise
EWF = Engineered Wood Fiber
PIP = Poured-In-Place Rubber Surfacing
PT = Pressure Treated

TOOLS SUPPLIED WITH THIS PRODUCT

- None

TOOLS THE INSTALLER NEEDS TO SUPPLY

- T25 drive bit
- T40 drive bit
- High Torque Drill
- Wood drill bit set up to and including 1/2"
- 1/2" impact driver
- Socket Set up to and including 1-1/8"
- Hammer drill
- Concrete drill bit set up to and including size required by epoxy manufacturer to set 3/4" threaded rod 8" deep in concrete pad
- Angle grinder (with course 24 grit sanding disks and metal cut off disks)
- Transit or Laser Level
- Rigging and lifting straps

EQUIPMENT THE INSTALLER NEEDS TO SUPPLY

Machine to lift and position heaviest element.

- Pre-assembled 2 Level Tower 5,500 LBS lbs

INSTALLER CREW AND TIME REQUIRED

Number of people needed: 3
Typical total person-hours to install: 80 + concrete cure time

Time breakdown:

- 8 hours x 3 people for excavation and pouring concrete
- Time for concrete cure
- 16 hours x 3 people for onsite fabrication and play equipment installation
- 4 hours x 2 people for onsite Enclosed Bridge installation

MATERIALS THE INSTALLER NEEDS TO SUPPLY

- Threadmate threadlocker Vibra-Tite VC-3 (or equal)
- Epoxy - Simpson Strong Tie "Set 3G" or Hilti "Hy-200"
- Concrete - as specified in details

WARNINGS

These instructions do not provide specific guidance on the use of tools or the lifting and moving heavy objects. It is assumed that competent people are installing this product who are familiar with using the tools and equipment required and are knowledgeable and skilled at lifting and positioning heavy objects.

PROPERTY OF EARTHSCAPE PLAY INC. - DO NOT COPY. DO NOT DISTRIBUTE.

MAKE SURE YOU HAVE ALL THE PARTS

Examine the equipment and ensure you have all the required parts listed in the table below.

See "As Shipped Page" to understand orientation of product as delivered to site.

PART IMAGE	ITEM NO.	PART NO.	DESCRIPTION	QTY.
SEE IMAGE NEXT SHEET	1	1209039*	MODIFIED WOODEN BRIDGE 12'	1
SEE IMAGE THIS SHEET	2	F00185	1 LEVEL TIMBER TOWER	
NO IMAGE PROVIDED	3	F00227	CLIMBING HOLDS (PRE-INSTALLED)	1
SEE IMAGE NEXT SHEET	4	F00228*	CLADDED LADDER	1
SEE IMAGE THIS SHEET	5	F00302*	FILE POLE - SURFACE MOUNT 6' PLATFORM	1
SEE IMAGE THIS SHEET	6	F00308*	PLASTIC OPEN SLIDE - IN GROUND 6' - VEER LEFT	1
SEE IMAGE NEXT SHEET	7	F00316*	PLASTIC TUBE SLIDE - FLANGE 12' - TURN RIGHT	1
SEE IMAGE NEXT SHEET	8	F00363*	WOODEN BRIDGE 10'	1
SEE IMAGE NEXT SHEET	9	F00403*	SLING SEATS - PIP	1
SEE IMAGE THIS SHEET	10	F00405*	ACCESS CLIMBING NET - PIP	1
SEE IMAGE NEXT SHEET	11	F00407	2 LEVEL TIMBER TOWER	1
	12	H20019	THREADED STUD 3/4"-10 X 12" SS	32
	13	H30047V	WASHER 3/4" X 1-3/4" SS	32
	14	H40015	HEX NUT 3/4-10 SS	64

IMAGES OF FASTENERS IN THIS TABLE ARE REPRESENTATIONAL TO HELP IDENTIFY PARTS.

*THESE ASSEMBLIES INCLUDE ADDITIONAL HARDWARE. REVIEW THE SEPARATE INSTALLATION PACKAGES THAT CORRESPOND TO EACH ADD-ON FOR MORE INFORMATION.

F00405
ACCESS CLIMBING NET - PIP
SHIPS IN PIECES
SEE SEPARATE INSTALLATION PACKAGE FOR ADDITIONAL DETAILS

F00302
FIRE POLE - SURFACE MOUNT 6' PLATFORM
SHIPS IN PIECES
SEE SEPARATE INSTALLATION PACKAGE FOR ADDITIONAL DETAILS

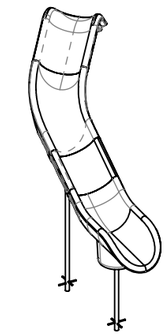

F00308
PLASTIC OPEN SLIDE - IN GROUND 6' - VEER LEFT
SHIPS IN PIECES
SEE SEPARATE INSTALLATION PACKAGE FOR ADDITIONAL DETAILS

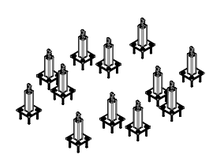

F00403
SLING SEATS - PIP
SHIPS IN PIECES
SEE SEPARATE INSTALLATION PACKAGE FOR ADDITIONAL DETAILS

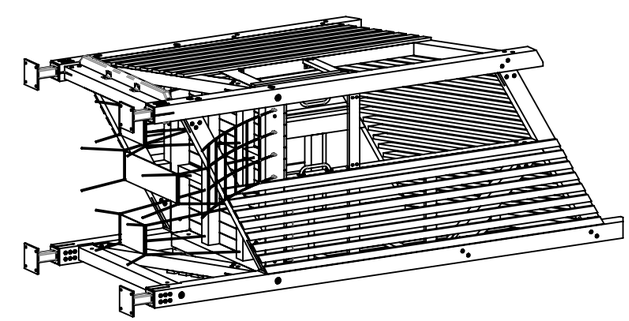

F00185
1 LEVEL TIMBER TOWER
SHIPS COMPLETE AS ILLUSTRATED
INSTALL DETAILS THIS PACKAGE

PROPERTY OF EARTHSCAPE PLAY INC. - DO NOT COPY. DO NOT DISTRIBUTE.

SUPPLIED PARTS (2 OF 2)

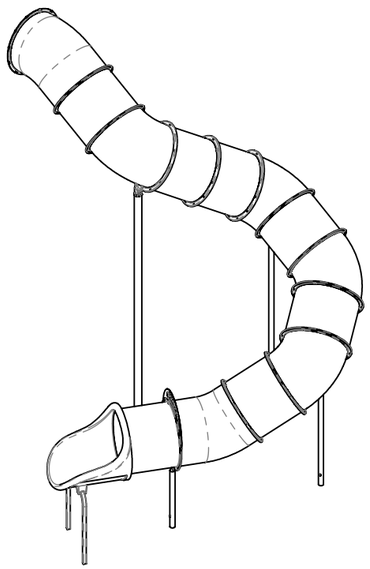

F00316
PLASTIC TUBE SLIDE - FLANGE
12' - TURN RIGHT
SHIPS IN PIECES
SEE SEPARATE INSTALLATION PACKAGE FOR
ADDITIONAL DETAILS

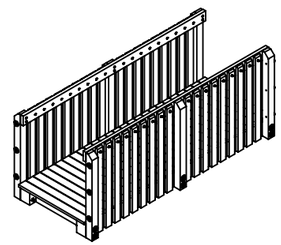

F00363
WOODEN BRIDGE 10'
SHIPS COMPLETE AS ILLUSTRATED
SEE SEPARATE INSTALLATION PACKAGE
FOR ADDITIONAL DETAILS

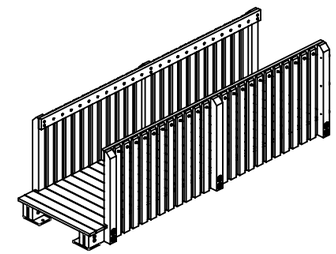

1209039
MODIFIED WOODEN BRIDGE 12'
SHIPS COMPLETE AS ILLUSTRATED
SEE SEPARATE INSTALLATION PACKAGE
FOR ADDITIONAL DETAILS

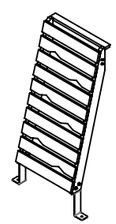

F00228
CLADDED LADDER
SHIPS COMPLETE AS ILLUSTRATED
SEE SEPARATE INSTALLATION PACKAGE FOR
ADDITIONAL DETAILS

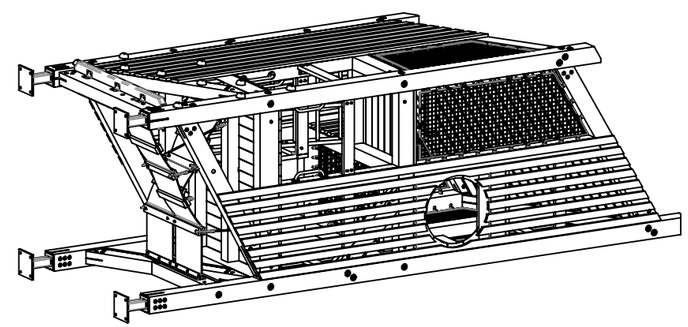

F00407
2 LEVEL TIMBER TOWER
SHIPS COMPLETE AS ILLUSTRATED
INSTALL DETAILS THIS PACKAGE

PROPERTY OF EARTHSCAPE PLAY INC. - DO NOT COPY. DO NOT DISTRIBUTE.

TOWER AS SHIPPED - 1 LEVEL TIMBER TOWER

COMBINED ASSEMBLY

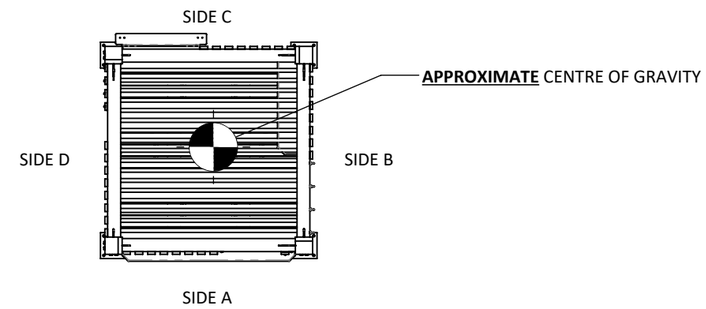

PLAN VIEW

PRE-ASSEMBLED TOWER AS SHIPPED
WEIGHS APPROXIMATELY:
4,350 LBS

DIMENSION TO
LIMITS OF POST
BASE BRACKETS

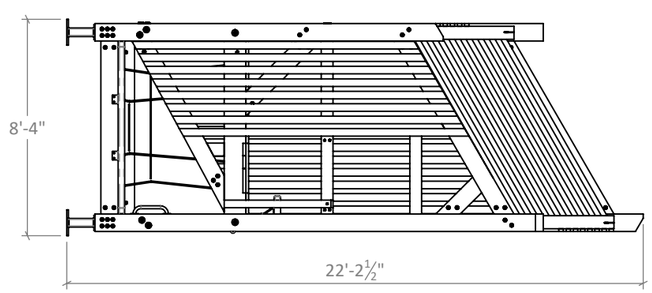

ORIENTATION ON TRUCK

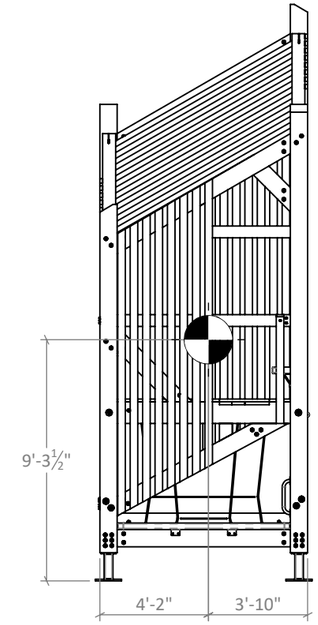

SIDE A ELEVATION

DIMENSIONS FROM OUTSIDE
FACE OF CORNER POSTS

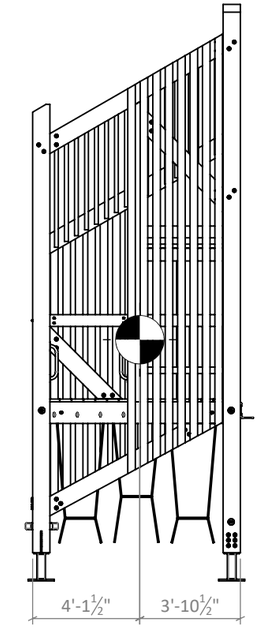

SIDE B ELEVATION

CENTRE OF GRAVITY

PROPERTY OF EARTHSCAPE PLAY INC. - DO NOT COPY. DO NOT DISTRIBUTE.

TOWER AS SHIPPED - 2 LEVEL TIMBER TOWER

COMBINED ASSEMBLY

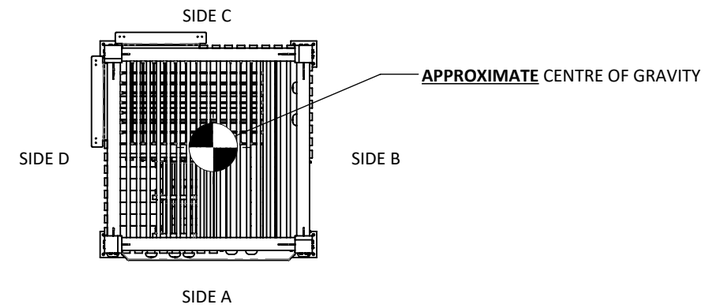

PLAN VIEW

PRE-ASSEMBLED TOWER AS SHIPPED
WEIGHS APPROXIMATELY:
5,500 LBS

DIMENSION TO
LIMITS OF POST
BASE BRACKETS

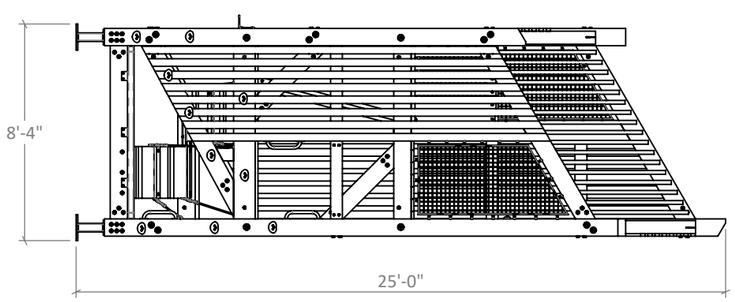

ORIENTATION ON TRUCK

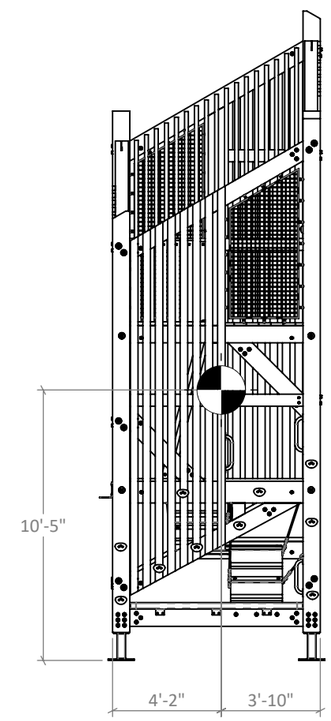

SIDE A ELEVATION

DIMENSIONS FROM OUTSIDE
FACE OF CORNER POSTS

CENTRE OF GRAVITY

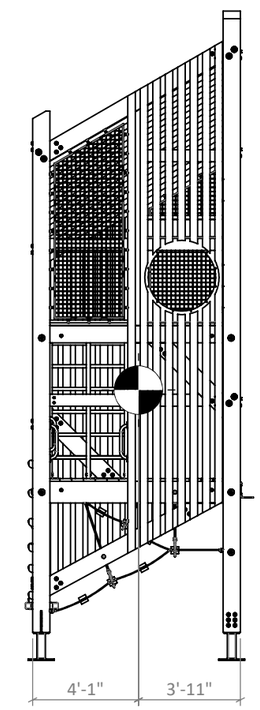

SIDE B ELEVATION

PROPERTY OF EARTHSCAPE PLAY INC. - DO NOT COPY. DO NOT DISTRIBUTE.

FINISHED PRODUCT - FRONT ISOMETRIC

WHAT THE FINISHED PRODUCT LOOKS LIKE

All concrete pads and play surfacing to be supplied by the installer.

Finished play surface is assumed to be level. Installation sites with sloped surfacing may not work with the supplied equipment. If the play surface is sloped contact your Earthscape Representative for assistance before proceeding.

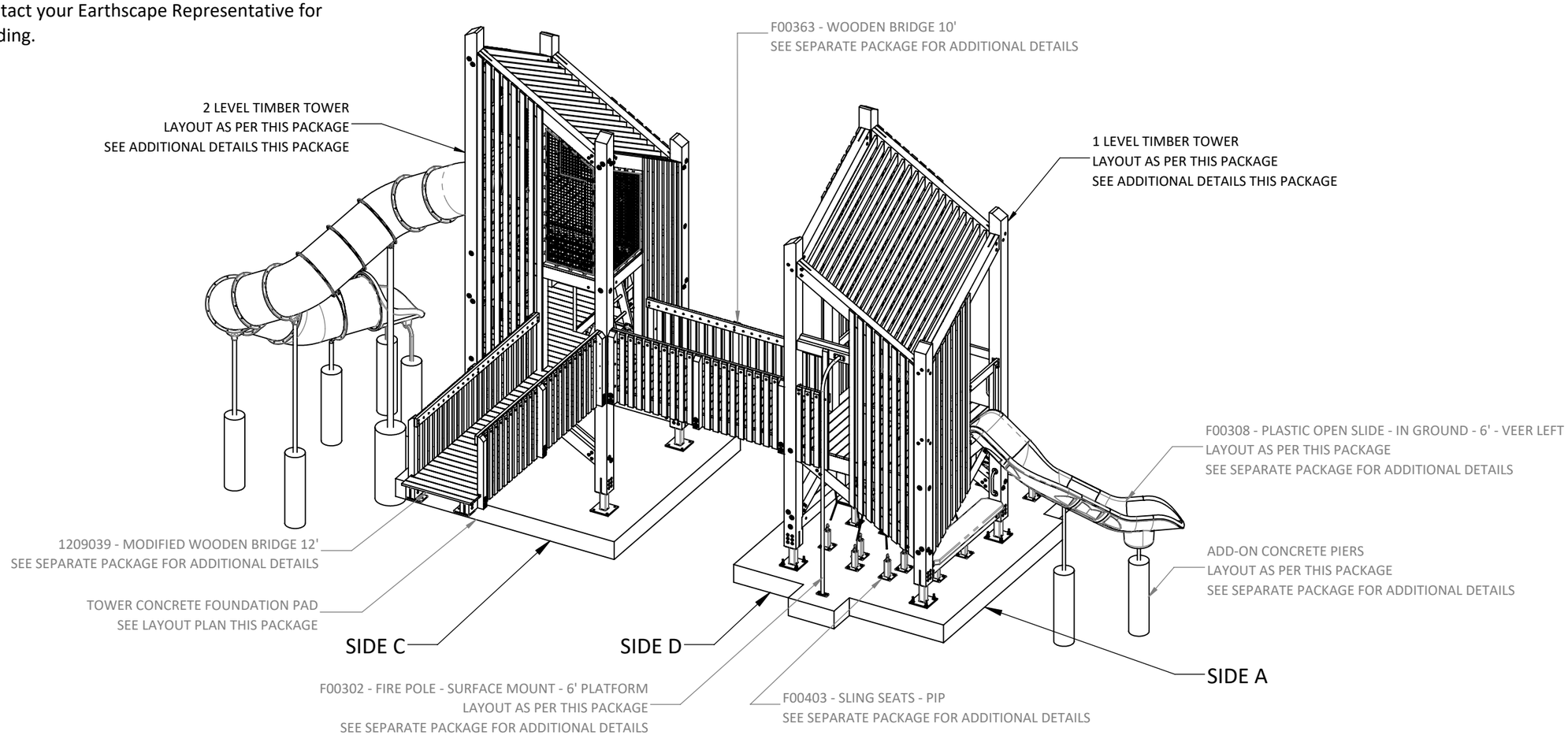

FRONT ISOMETRIC VIEW

PROPERTY OF EARTHSCAPE PLAY INC. - DO NOT COPY. DO NOT DISTRIBUTE.

FINISHED PRODUCT - REAR ISOMETRIC

WHAT THE FINISHED PRODUCT LOOKS LIKE

See note on the Finished Product - Front Isometric Sheet

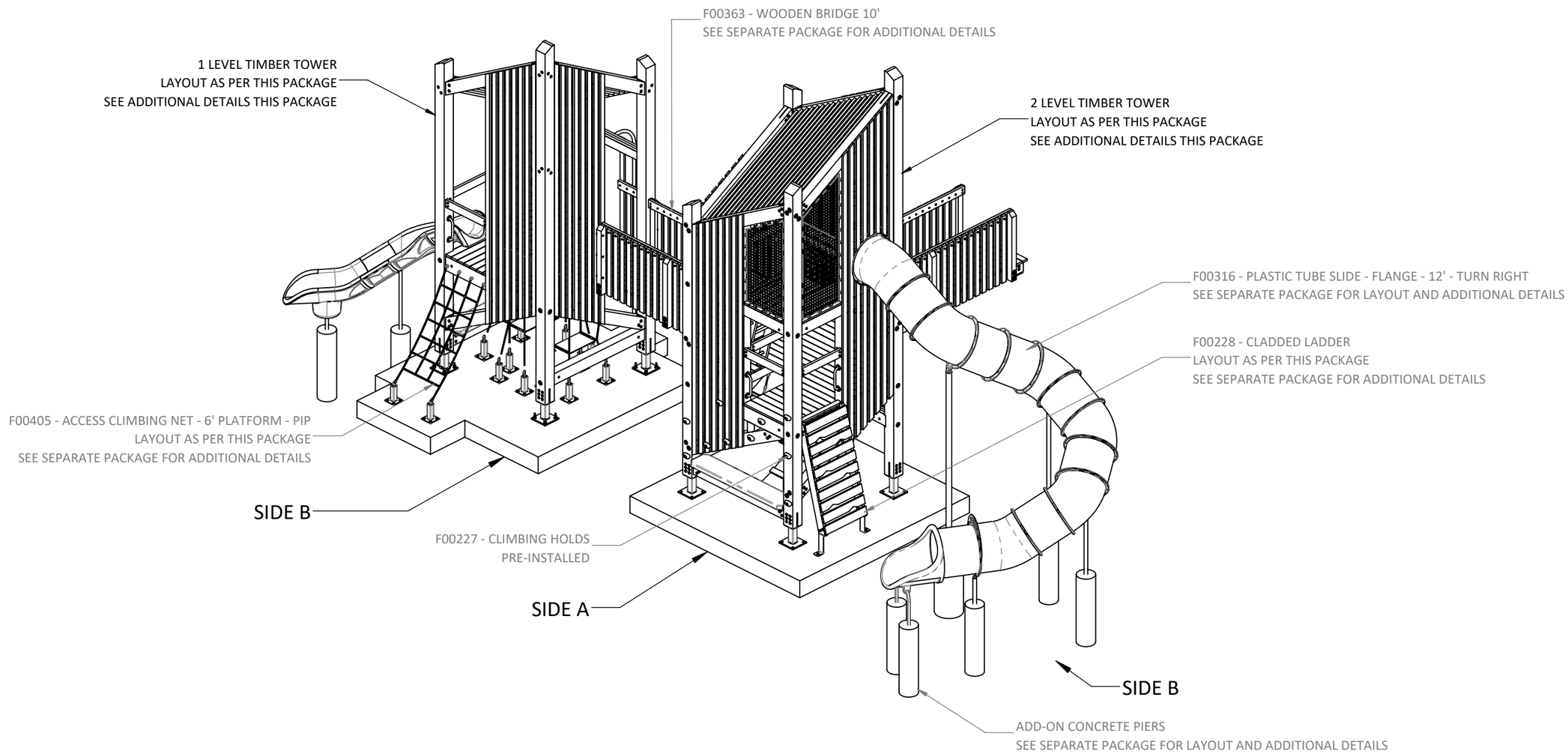

PROPERTY OF EARTHSCAPE PLAY INC. - DO NOT COPY. DO NOT DISTRIBUTE.

FINISHED PRODUCT - 1 LEVEL TIMBER TOWER

WHAT THE FINISHED PRODUCT LOOKS LIKE

See note on the Finished Product - Front Isometric Sheet

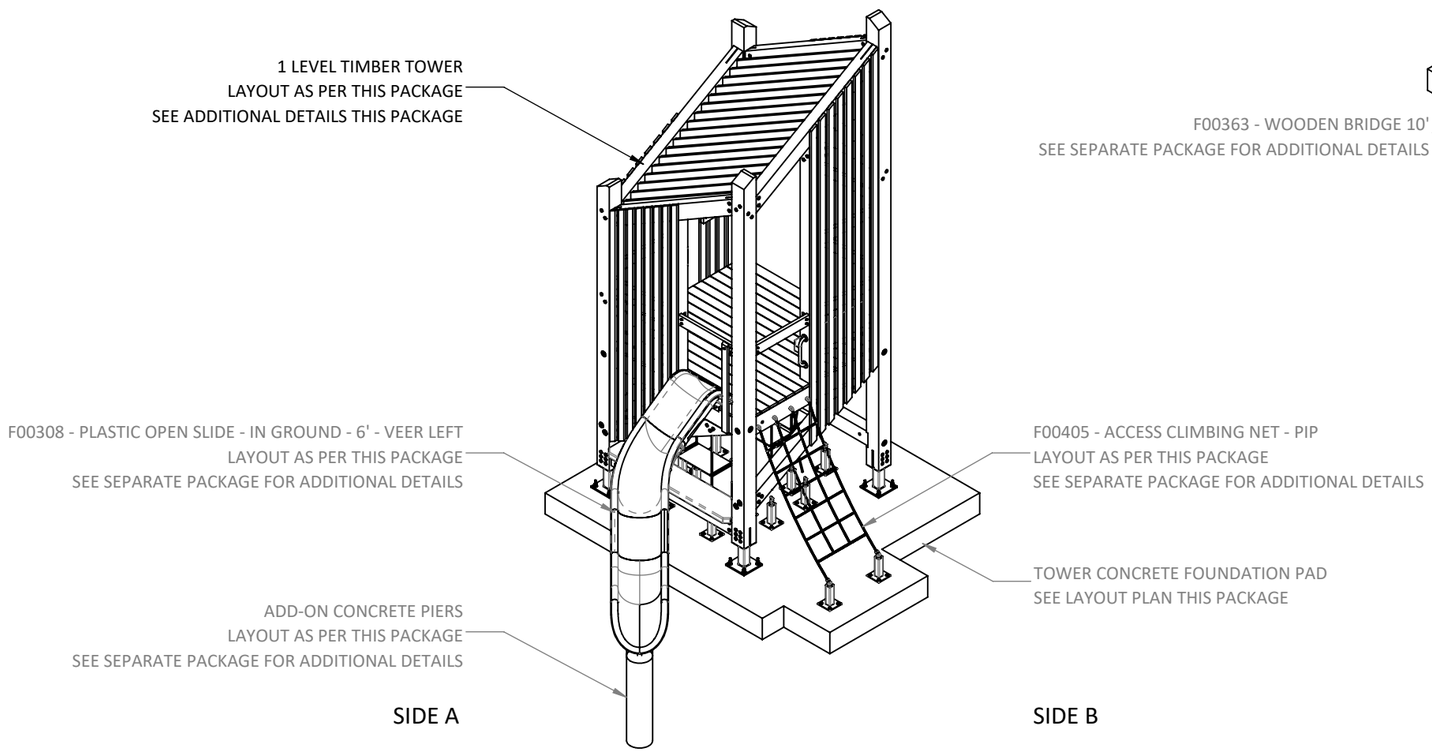

FRONT ISOMETRIC VIEW

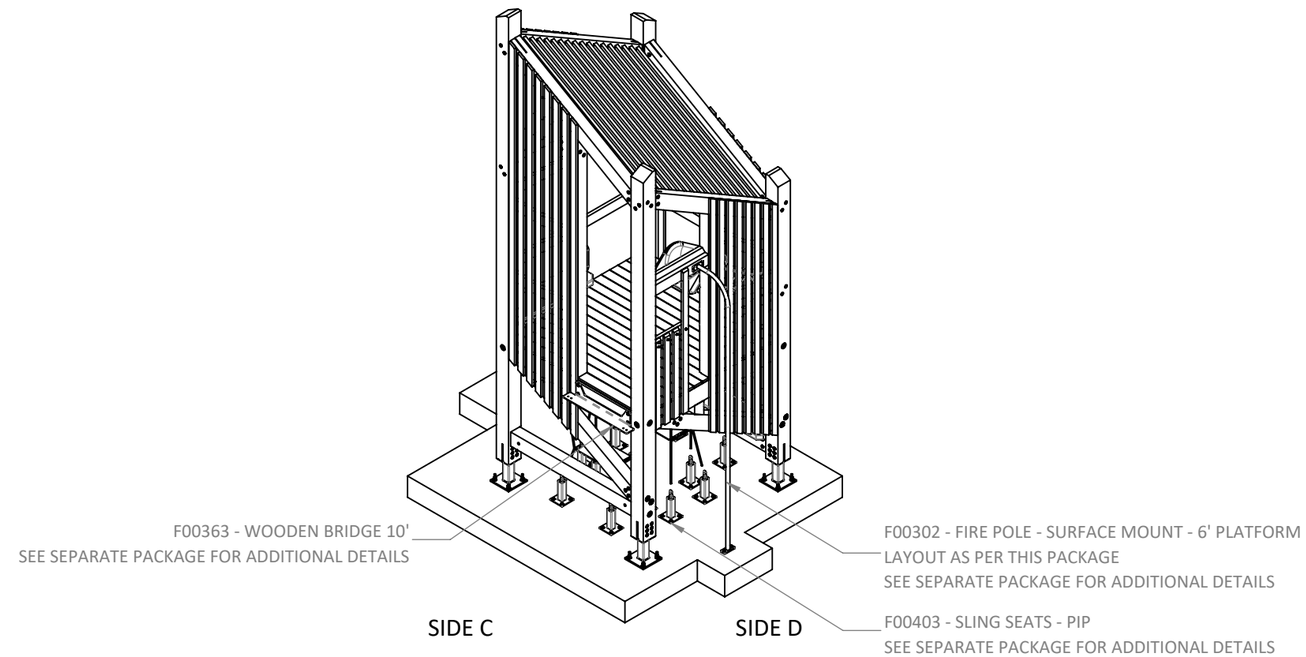

FRONT ISOMETRIC VIEW

PROPERTY OF EARTHSCAPE PLAY INC. - DO NOT COPY. DO NOT DISTRIBUTE.

FINISHED PRODUCT - 2 LEVEL TIMBER TOWER

WHAT THE FINISHED PRODUCT LOOKS LIKE

See note on the Finished Product - Front Isometric Sheet

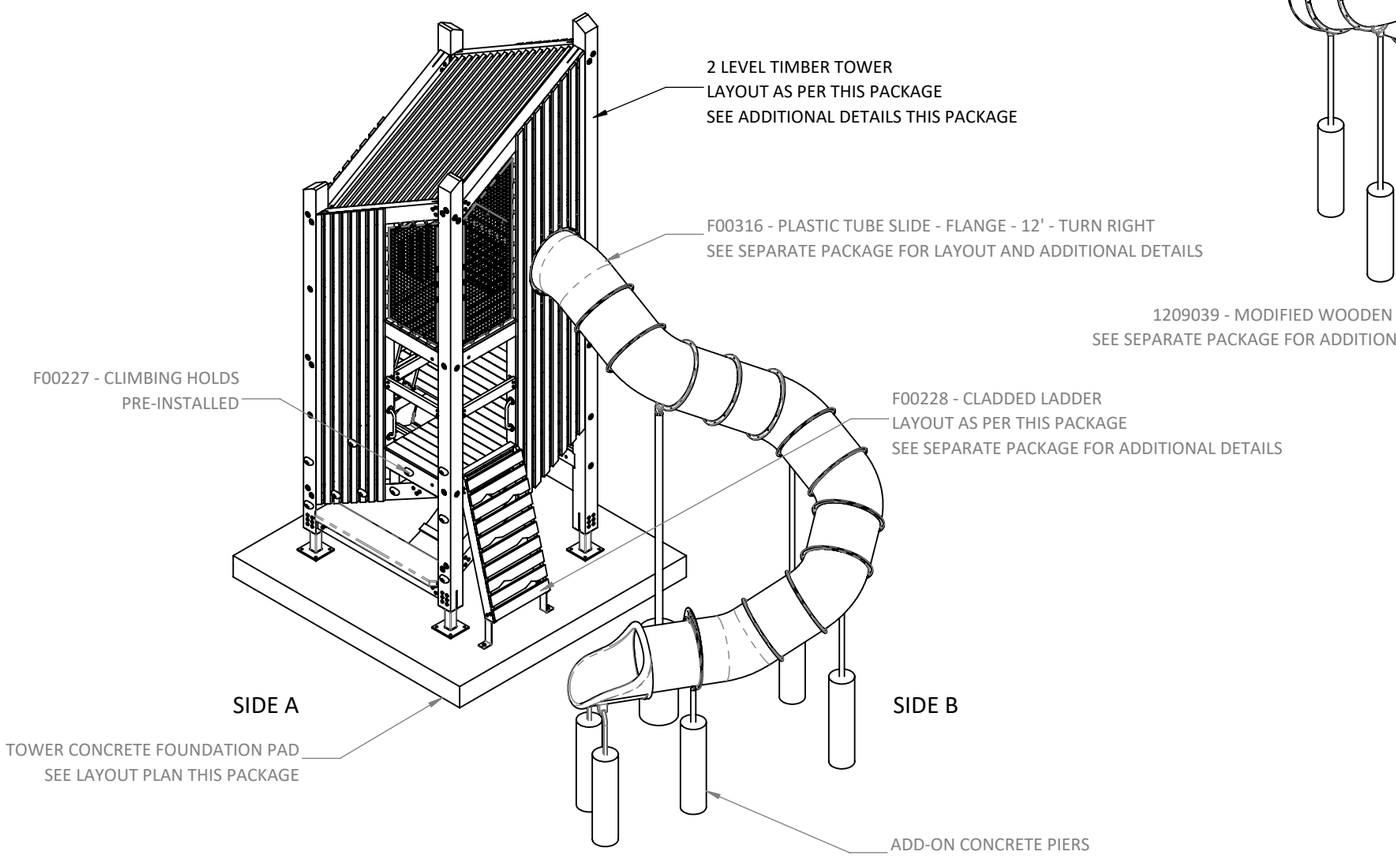

FRONT ISOMETRIC VIEW

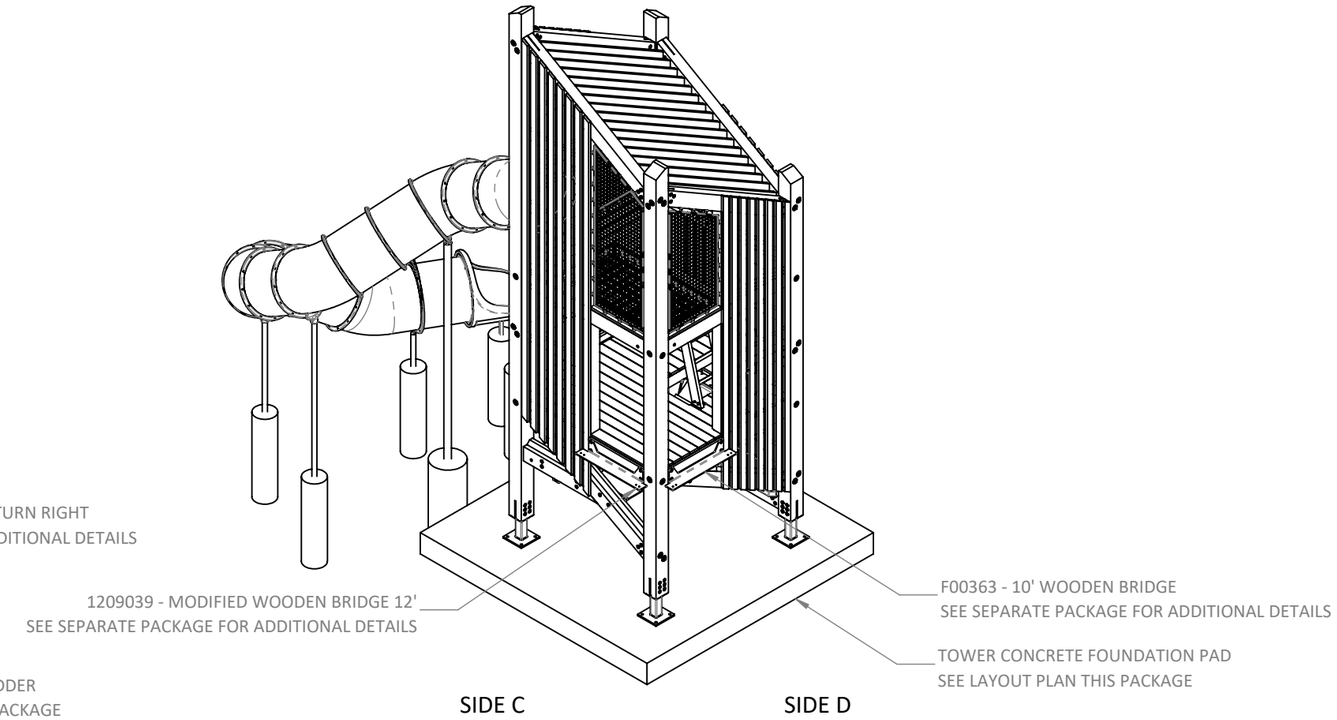

FRONT ISOMETRIC VIEW

PROPERTY OF EARTHSCAPE PLAY INC. - DO NOT COPY. DO NOT DISTRIBUTE.

FINISHED PRODUCT - PLAN VIEW

REAR

WHAT THE FINISHED PRODUCT LOOKS LIKE

See note on the Finished Product - Front Isometric sheet

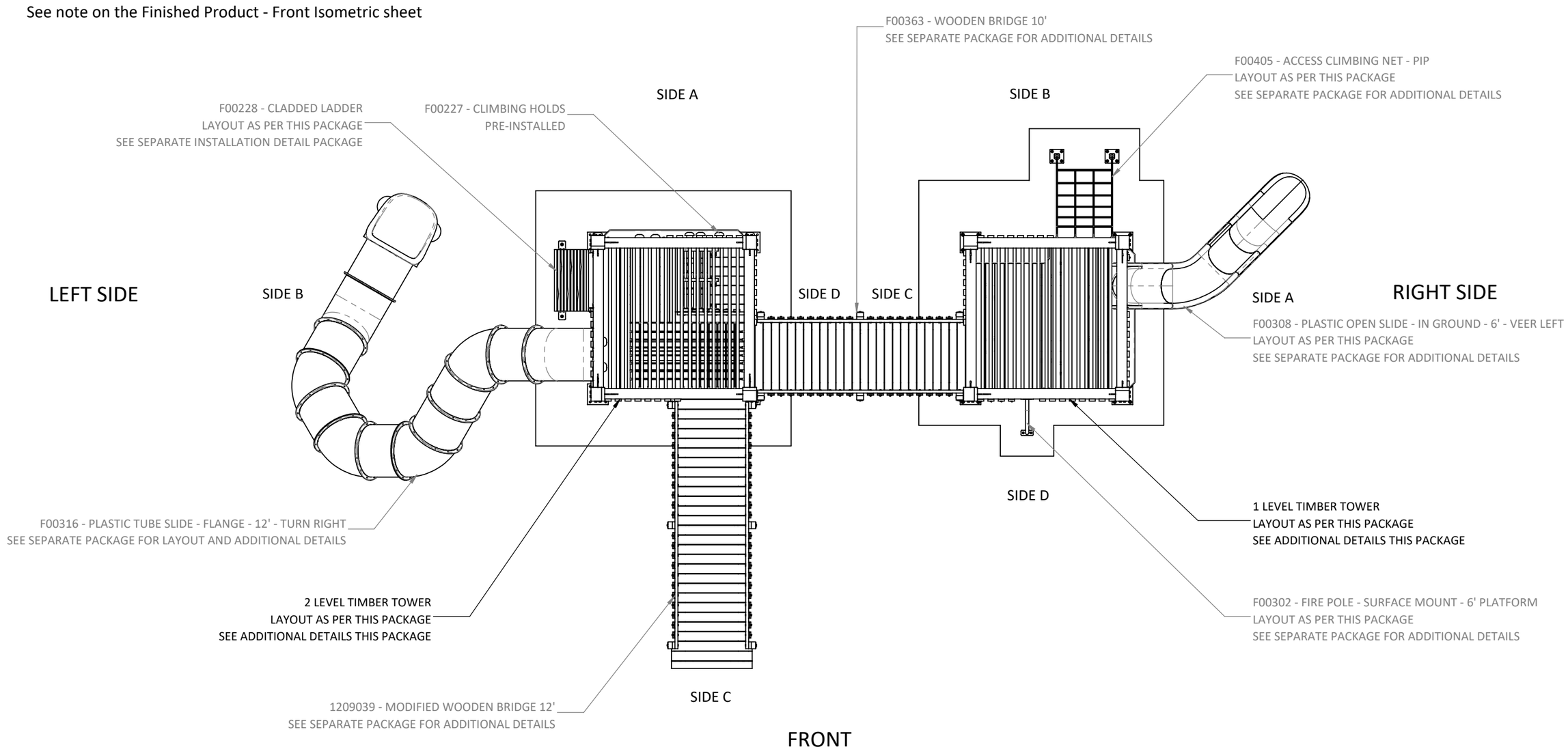

FRONT

PROPERTY OF EARTHSCAPE PLAY INC. - DO NOT COPY. DO NOT DISTRIBUTE.

WHAT THE FINISHED PRODUCT LOOKS LIKE

See note on the Finished Product - Front Isometric sheet

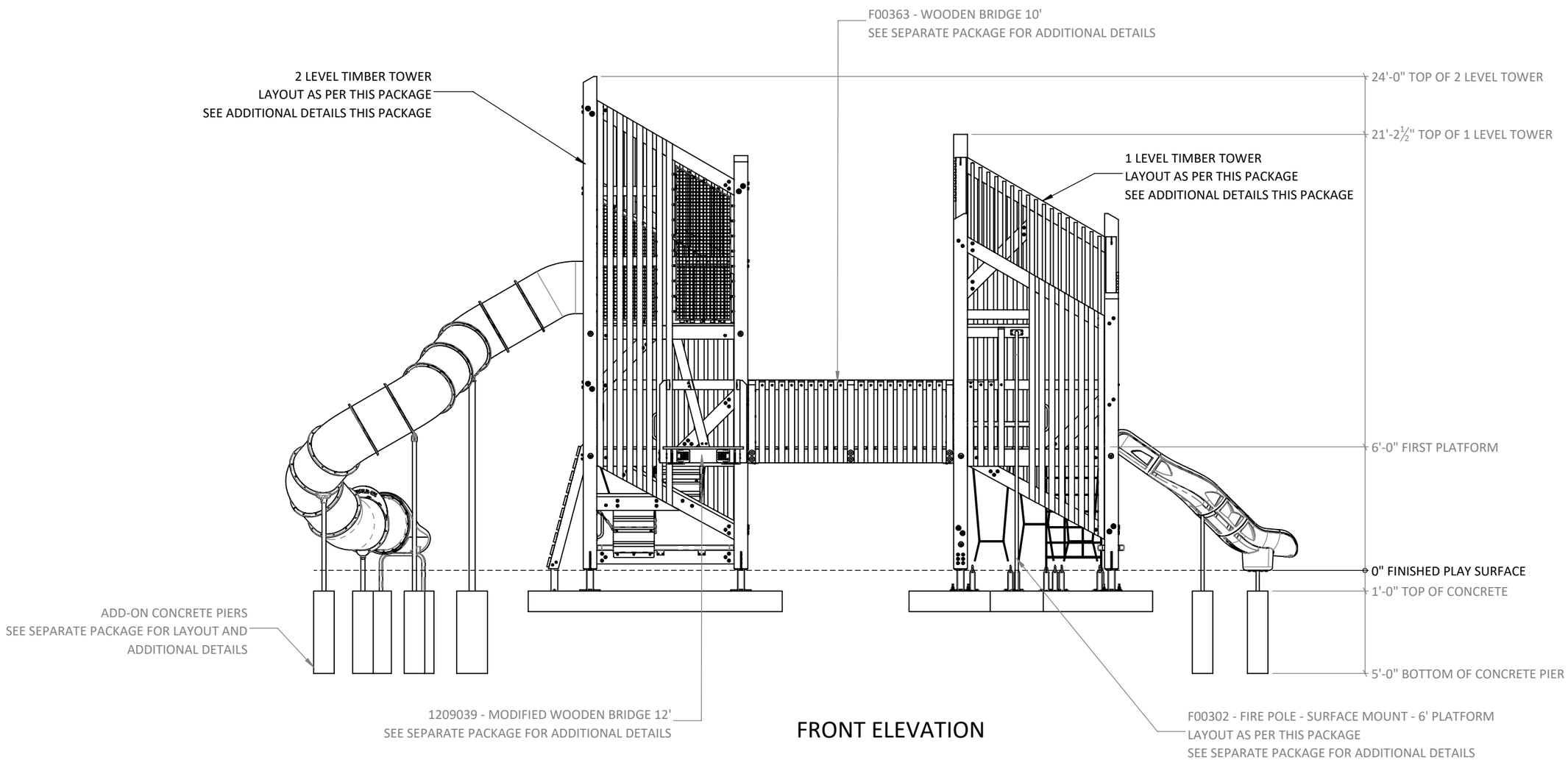

FRONT ELEVATION

PROPERTY OF EARTHSCAPE PLAY INC. - DO NOT COPY. DO NOT DISTRIBUTE.

FINISHED PRODUCT - ELEVATIONS 2 OF 4

WHAT THE FINISHED PRODUCT LOOKS LIKE

See note on the Finished Product - Front Isometric sheet

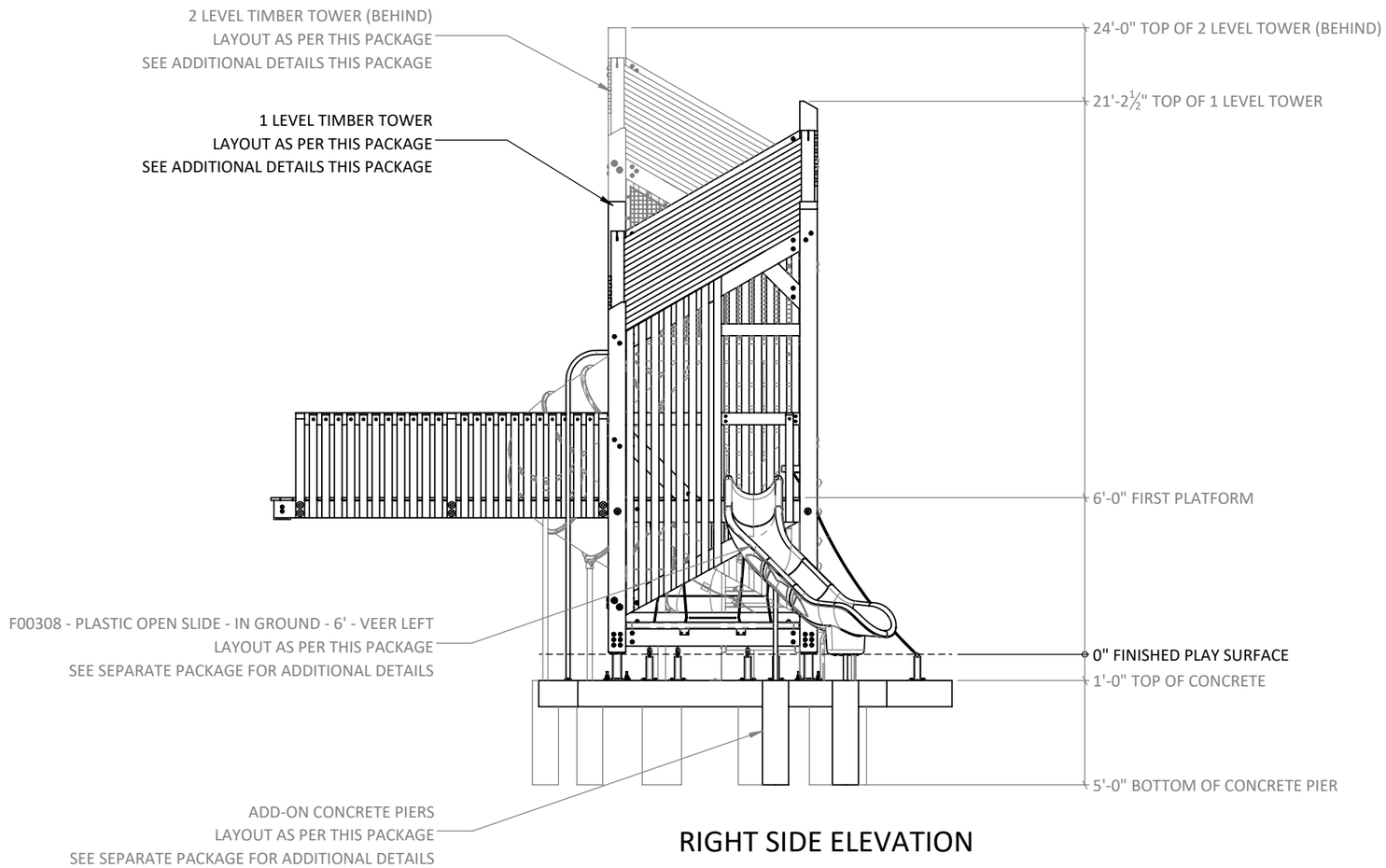

RIGHT SIDE ELEVATION

PROPERTY OF EARTHSCAPE PLAY INC. - DO NOT COPY. DO NOT DISTRIBUTE.

WHAT THE FINISHED PRODUCT LOOKS LIKE

See note on the Finished Product - Front Isometric sheet

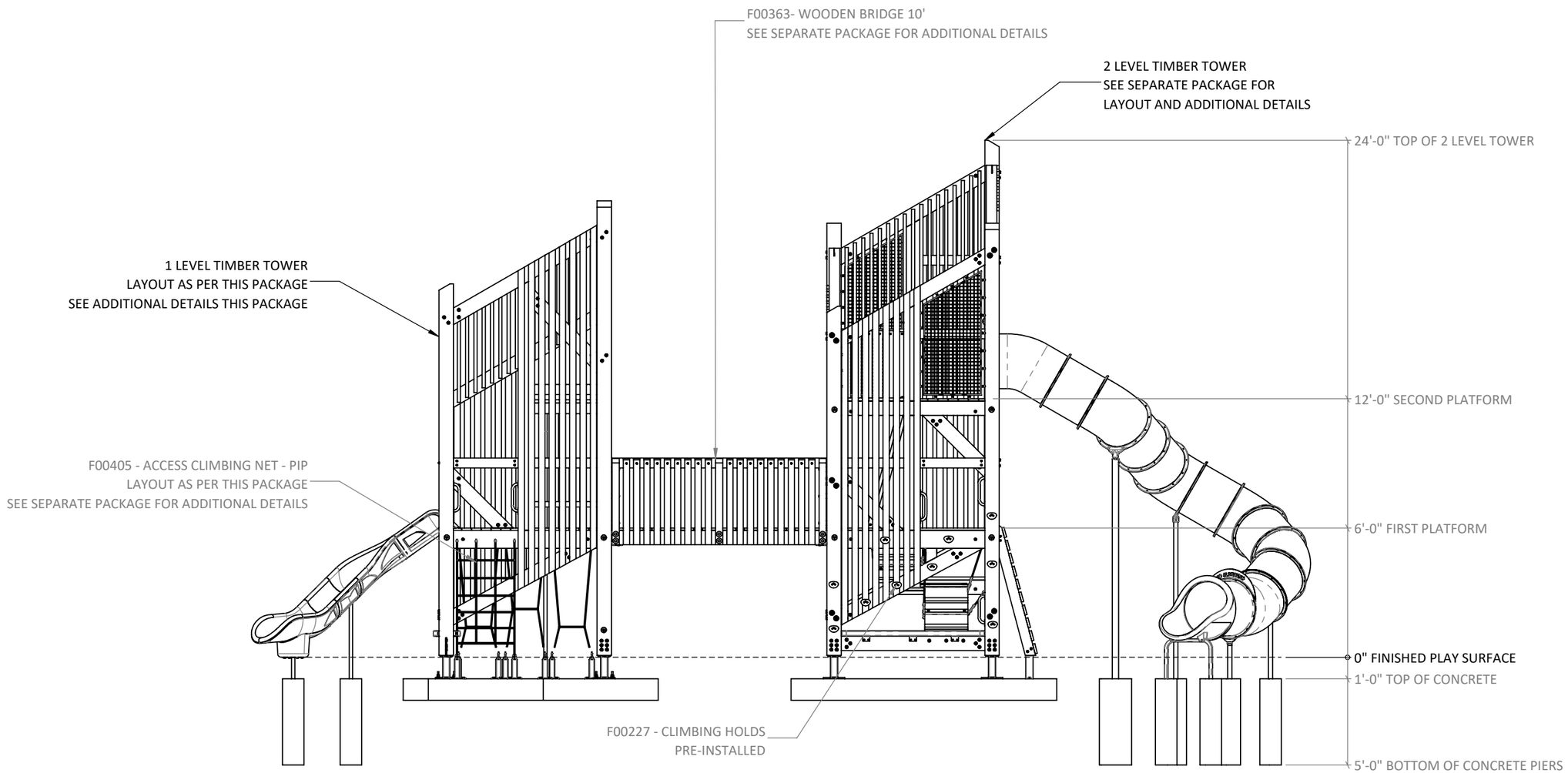

REAR ELEVATION

PROPERTY OF EARTHSCAPE PLAY INC. - DO NOT COPY. DO NOT DISTRIBUTE.

FINISHED PRODUCT - ELEVATIONS 4 OF 4

WHAT THE FINISHED PRODUCT LOOKS LIKE

See note on the Finished Product - Isometrics sheet

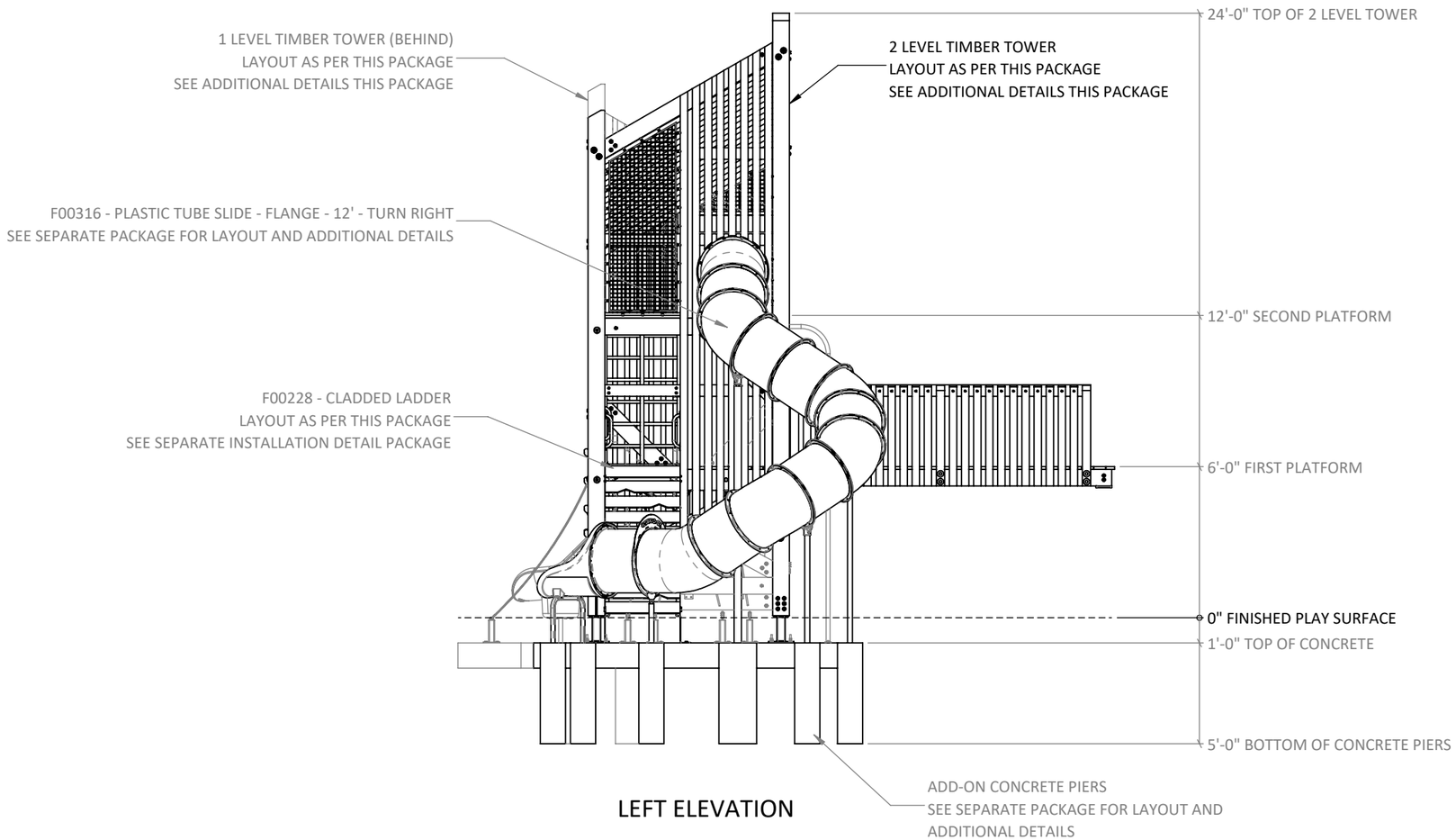

LEFT ELEVATION

PROPERTY OF EARTHSCAPE PLAY INC. - DO NOT COPY. DO NOT DISTRIBUTE.

LOCATE PLAY EQUIPMENT AND POUR TOWER PAD

STEP 1 - LOCATING THE EQUIPMENT ON SITE

Layout and mark the location of the equipment Reference Points (R.P.) on your site. Reference Points are taken from the outside corners of the tower base brackets. Refer to 1209039 - Modified Timber Bridge 12' to ensure the concrete is positioned with respect to the abutment for the bridge. The location of these points relative to the site is not within the scope of these instructions and should be provided by others.

Ensure you know what the designed elevation is for the finished safety surface. All heights provided in these instructions will be relative to the finished play surface. The finished surface elevation is not within the scope of these instructions and should be provided by others.

STEP 2 - LAYOUT CONCRETE PAD

Layout and mark the outer edge of concrete pad based off the Reference Points. Refer to Foundation Plan this sheet for details

Top of concrete is 305mm [12"] below finished play surface.

STEP 3 - EXCAVATE FOR CONCRETE PAD

Excavate area and prep as per Concrete Placement Detail SD-001B at the back of this package.

The foundation detail provided in these instructions has been developed assuming typical soil conditions specified in general notes. If the subgrade encountered does not meet these conditions, the subgrade must be improved or revisions made to this detail. Revisions to the detail are the responsibility of the installer and it is strongly recommended any changes be reviewed and approved by a registered engineer.

STEP 4 - POUR CONCRETE PAD

Form and pour timber tower concrete pads as per Foundation Plan this sheet and Concrete Placement Detail SD-001B on this sheet.

Allow concrete to cure prior to proceeding to Step 5.

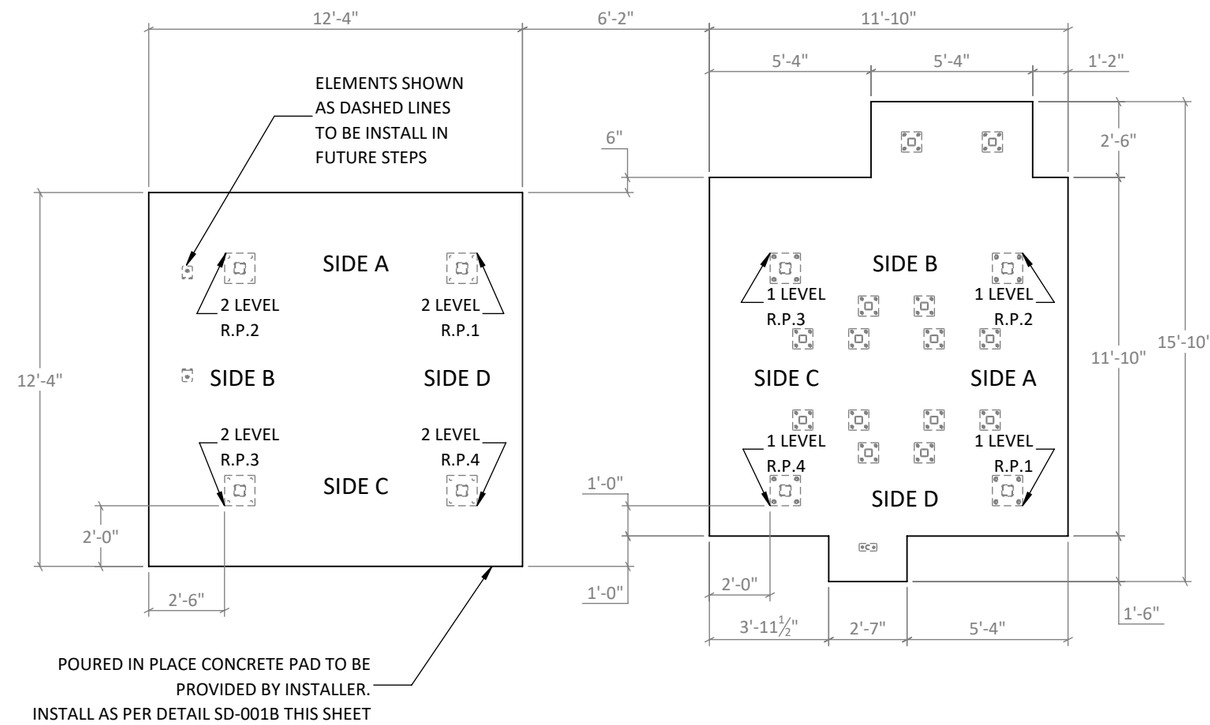

FOUNDATION PLAN

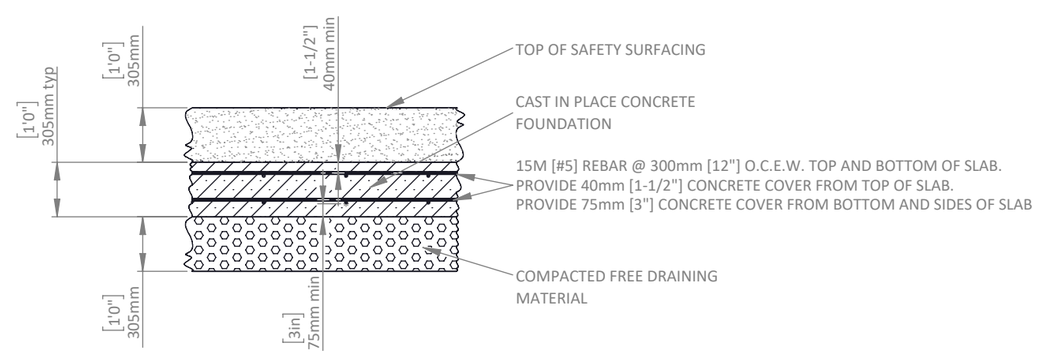

FOUNDATION NOTES:

1. TOP OF CONCRETE TO BE SET AT 300mm [12"] BELOW TOP OF SURFACING UNO.
2. SLAB TO BEAR ON MATERIAL BELOW THE FROST DEPTH, OR ALTERNATIVELY ON 300mm [12"] OF FREE DRAINING NON FROST SUSCEPTIBLE SOILS, COMPACTED TO 98% SPDD.

CONCRETE PLACEMENT DETAIL SD-001B

PROPERTY OF EARTHSCAPE PLAY INC. - DO NOT COPY. DO NOT DISTRIBUTE.

POSITION 2 LEVEL TIMBER TOWER

STEP 5 - POSITION TOWER

Layout and mark the location of the equipment Reference Points (R.P.) on the cured concrete pad as per this sheet.

Position the 2 Level Timber Tower on the foundation pad aligning it to the site reference points. Reference Points align with the outside corners of the tower base brackets. Refer to 1209039 - Modified Timber Bridge 12' to ensure the tower is centered with the concrete abutment for the bridge.

STEP 6 - INSTALL 12' MODIFIED WOODEN BRIDGE TO ABUTMENT

Install 1209039 - Modified Wooden Bridge 12' as per separate installation package. End of the bridge to secure to a concrete abutment provided by the installer

DO NOT ANCHOR TOWER TO THE FOUNDATION AT THIS TIME.

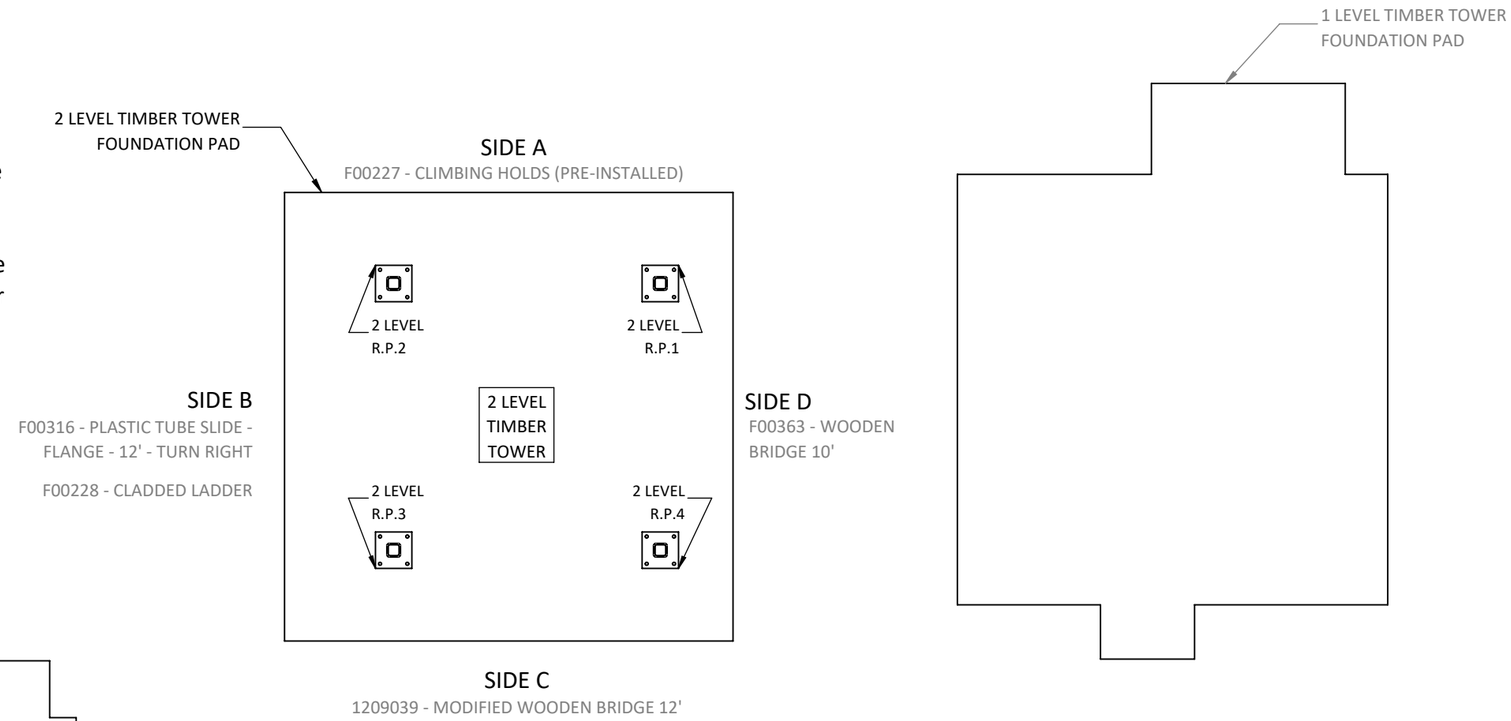

2 LEVEL TIMBER TOWER LAYOUT

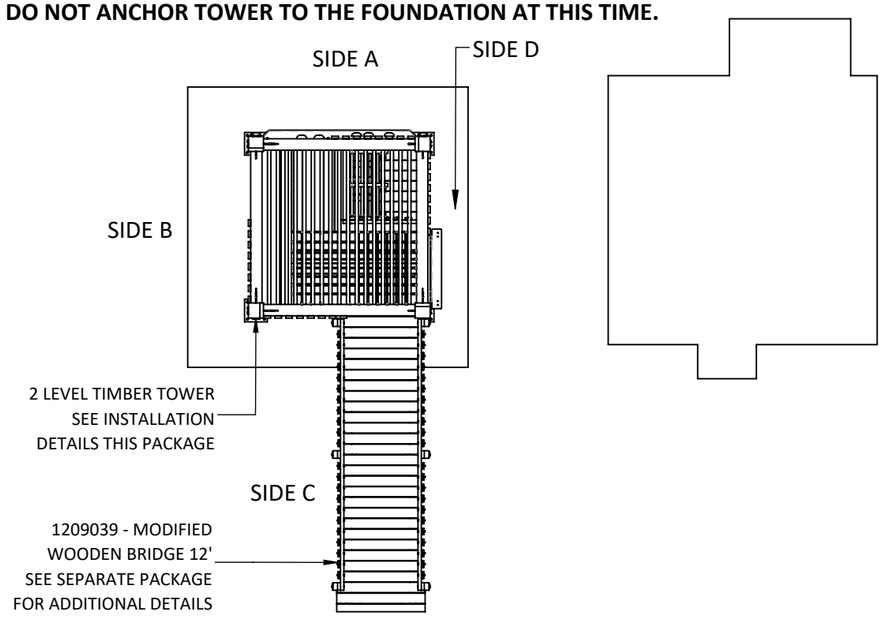

TOWER AT THE END OF STEP 6

PROPERTY OF EARTHSCAPE PLAY INC. - DO NOT COPY. DO NOT DISTRIBUTE.

STEP 7 - POSITION 1 LEVEL TOWER

Position the 1 Level Timber Tower on the foundation pad aligning it to the 2 Level Timber Tower as per the Layout this sheet.

STEP 8 - INSTALL 10' WOODEN BRIDGE

Install F00363 - Wooden Bridge 10' as per the separate installation package.

DO NOT ANCHOR TOWER TO THE FOUNDATION AT THIS TIME.

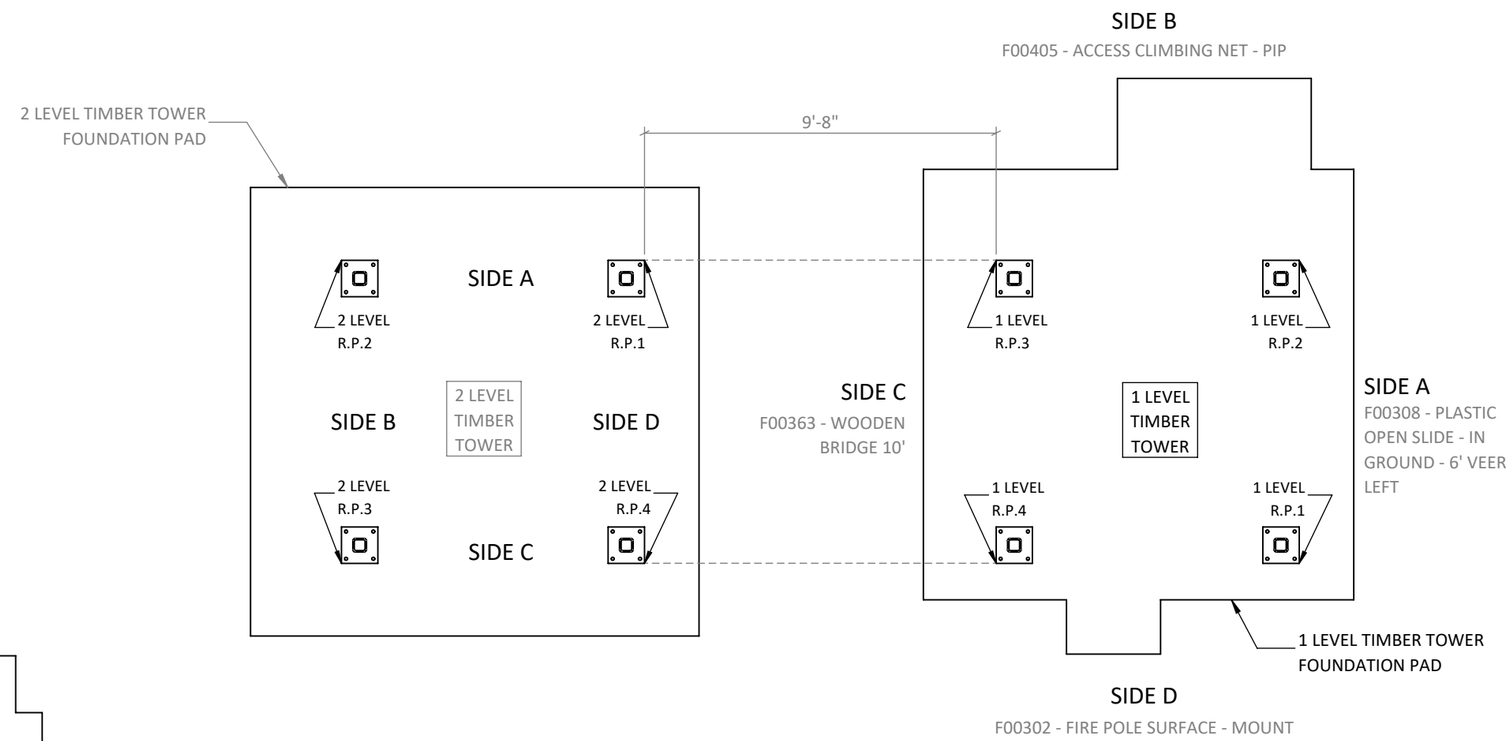

1 LEVEL TIMBER TOWER LAYOUT

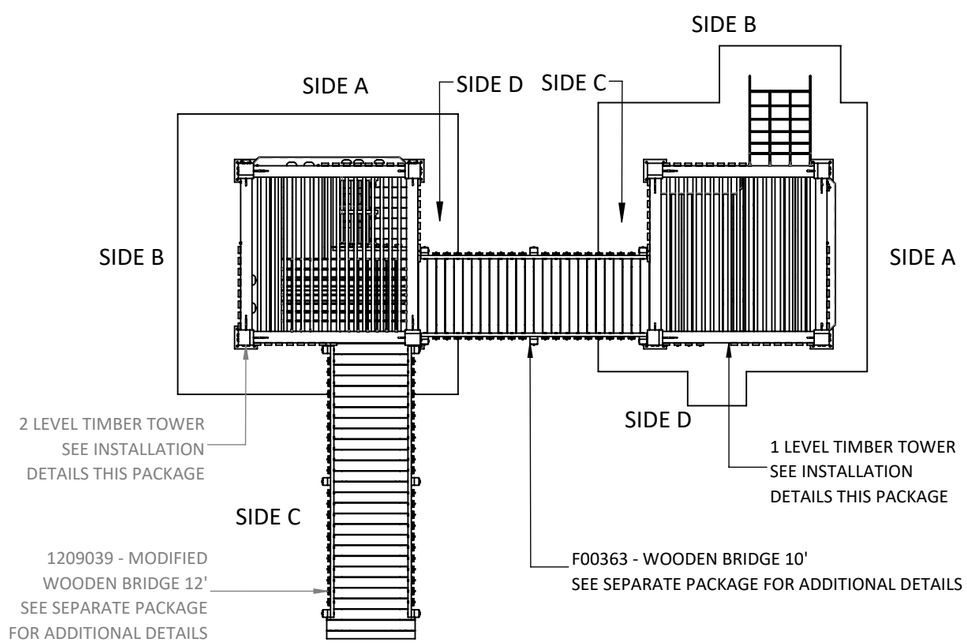

TOWER AT THE END OF STEP 8

PROPERTY OF EARTHSCAPE PLAY INC. - DO NOT COPY. DO NOT DISTRIBUTE.

STEP 9 - SECURE TOWERS TO FOUNDATION PAD

Secure both Timber Tower post base brackets to the concrete foundation pad as per SD-002B on this sheet.

Ensure excess threaded rod cut and ground after installation complete as noted on detail.

Anchoring of threaded rod with epoxy to be completed as per epoxy manufacturer's instructions.

MAINTAIN A MINIMUM ANCHOR ROD EDGE DISTANCE OF 100mm [4"].

HARDWARE REFERENCE LIST (PER CONNECTION)

ITEM NO.	PARTNO	DESCRIPTION	QTY.
1	H20019	Threaded Stud 3/4"-10 x 12" SS	4
2	H30047V	WASHER 3/4" X 1-3/4" SS	4
3	H40015	HEX NUT 3/4-10 SS	8

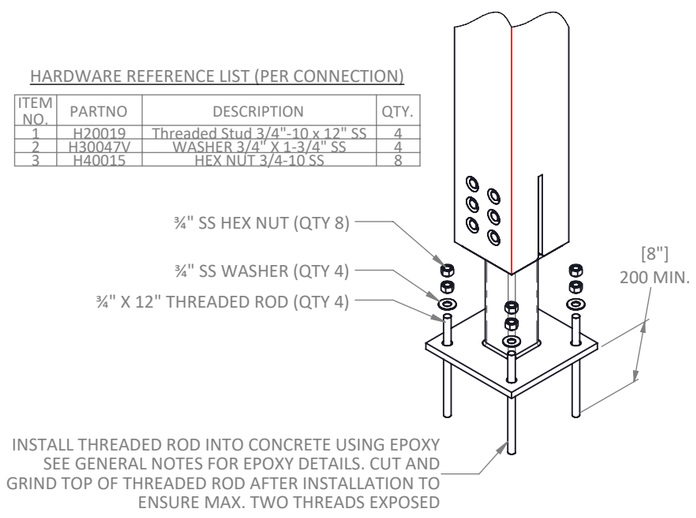

SD-002B

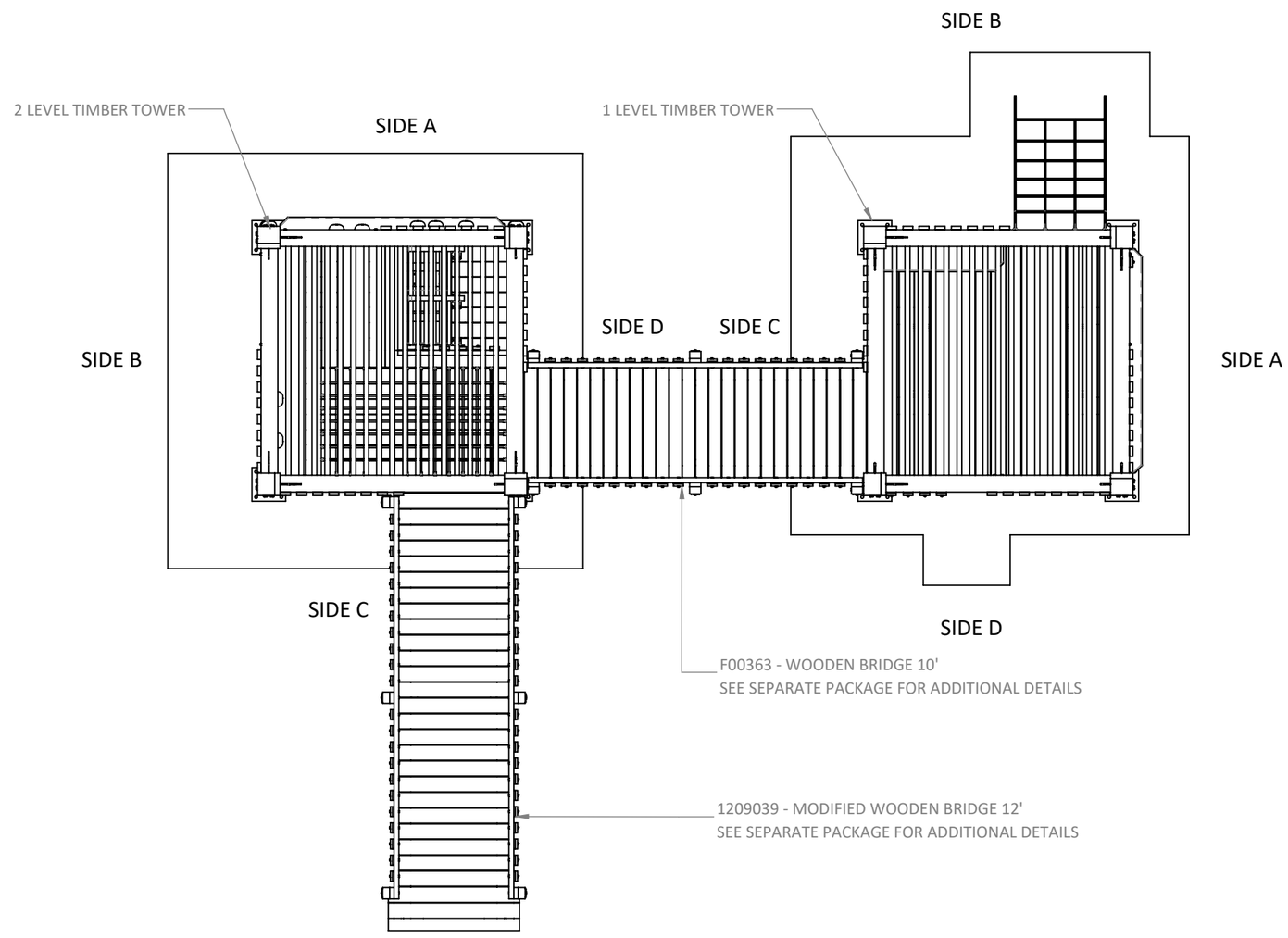

TOWER AT THE END OF STEP 9

PROPERTY OF EARTHSCAPE PLAY INC. - DO NOT COPY. DO NOT DISTRIBUTE.

STEP 10 - LOCATE AND INSTALL ADD-ONS

Refer to the layout drawing on this sheet to locate the add-ons relative to the timber towers.

Anchoring and other details relating to installation of the add-ons to be found in their separate installation packages.

1 LEVEL TIMBER TOWER ADD-ONS
F00302 - FILE POLE - SURFACE MOUNT - 6' PLATFORM
F00308 - PLASTIC OPEN SLIDE - IN GROUND - 6' - VEER LEFT
F00403 - SLING SEATS - PIP
F00405 - ACCESS CLIMBING NET - PIP

2 LEVEL TIMBER TOWER ADD-ONS
F00228 - CLADDED LADDER
F00316 - PLASTIC TUBE SLIDE - FLANGE - 12' - TURN RIGHT

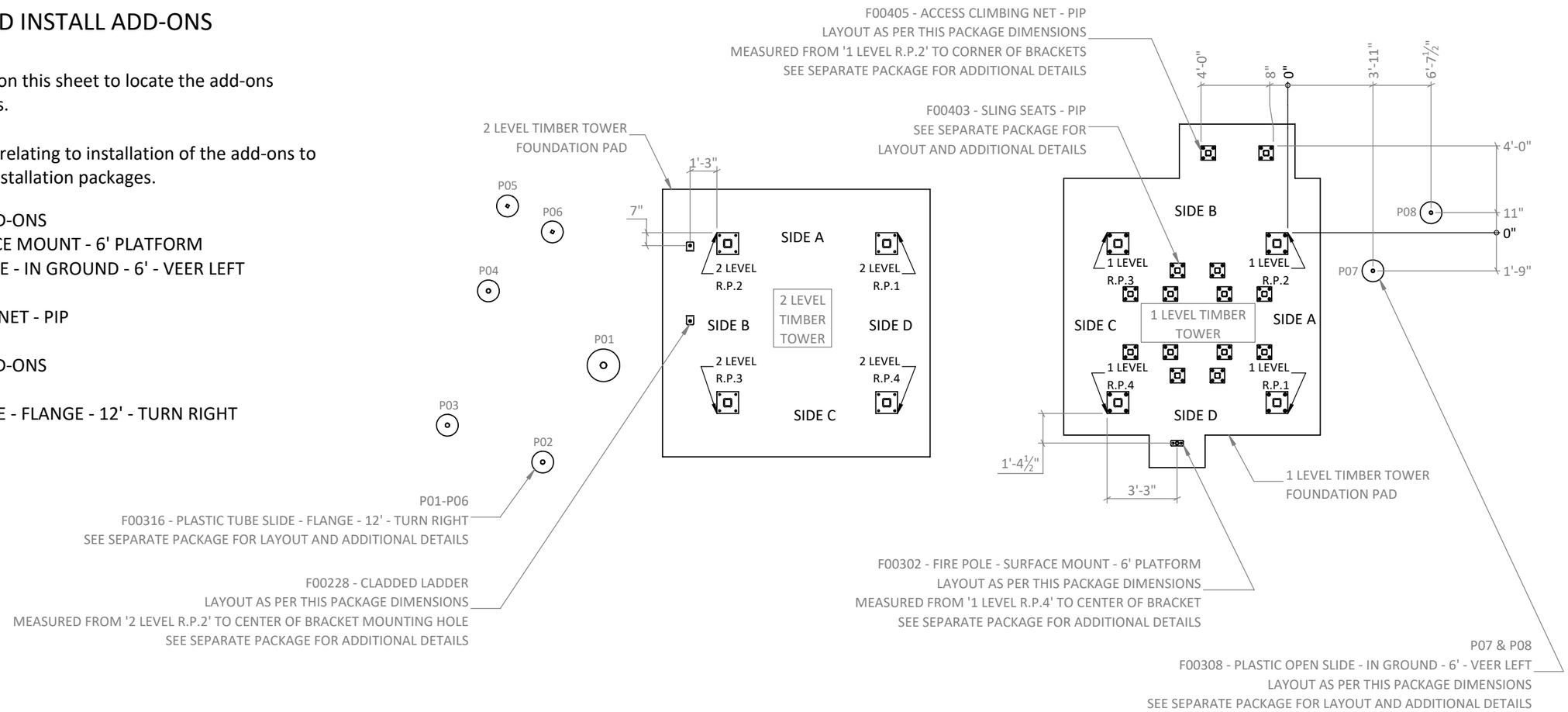

TOWER ADD-ON LAYOUT PLAN

PIER LAYOUT TABLE							
PIER I.D.	ADD-ON	PIER DIAMETER	PIER DEPTH	RAY FROM 1 LEVEL R.P.1	RAY FROM 1 LEVEL R.P.2	RAY FROM 1 LEVEL R.P.3	RAY FROM 1 LEVEL R.P.4
P07	F00308	∅1'-0"	5'-0"	7'-8"	4'-3½"	-	-
P08	F00308	∅1'-0"	5'-0"	11'-4½"	6'-8"	-	-

PROPERTY OF EARTHSCAPE PLAY INC. - DO NOT COPY. DO NOT DISTRIBUTE.

GENERAL NOTES

COMBINED ASSEMBLY

FOR CANADIAN INSTALLATION SITES USE THESE NOTES

GENERAL NOTES

1. THIS DRAWING IS THE PROPERTY OF EARTHSCAPE. DO NOT COPY OR DISTRIBUTE WITHOUT PERMISSION.
2. EARTHSCAPE RESERVES OWNERSHIP OF ALL DRAWINGS, SPECIFICATIONS, AND OTHER DOCUMENTS, INCLUDING THOSE IN ELECTRONIC FORM, AUTHORED BY EARTHSCAPE. UPON SIGNING CONTRACT, EARTHSCAPE GRANTS THE OWNER LIMITED LICENSE TO USE THE INSTRUMENTS OF SERVICE SOLELY FOR USING AND MAINTAINING, OR ADDING TO THE PROJECT
3. ENGINEERING AND STRUCTURAL REVIEW: EARTHSCAPE PROVIDES STAMPED DRAWINGS AND/OR STRUCTURAL LOAD TESTING FOR ONTARIO, AS REQUIRED BY CSA Z614. LOCAL ENGINEERING APPROVAL FOR JURISDICTIONS OUTSIDE ONTARIO, IF REQUIRED, TO BE PROVIDED BY OTHERS.
4. EARTHSCAPE DESIGNS AND ENGINEERS FOR A FROST PENETRATION DEPTH OF 1200mm. SLAB ON GRADE CONSTRUCTION IS SUBJECT TO FROST MOVEMENTS. FREE DRAINING SOIL UNDER THE FOOTING IS USED TO MINIMIZE FROST EFFECTS. OVERALL TOWER/SLAB MOVEMENT MAY OCCUR.
5. INSPECTION AND TESTING: INSPECTION, TESTING (INCLUDING CONCRETE TESTING), PRE-CONSTRUCTION SURVEYS TO BE COMPLETED BY OTHERS.
6. SURFACING: WHEN AN IMPACT-ABSORBING SURFACE MATERIAL IS REQUIRED, IT MUST COMPLY WITH CSA Z614 (MOST RECENT EDITION) FOR THE DEFINED FALL HEIGHT OF THE EQUIPMENT SPECIFIED IN DRAWINGS BY EARTHSCAPE OR A CONTRACTUALLY OBLIGATED CRITICAL HEIGHT SPECIFIED IN ADVANCE. ENSURE USE ZONES, SAFETY ZONES, AND/OR PROTECTIVE SURFACING ZONES AROUND ALL PLAY EQUIPMENT ARE COMPLIANT WITH CSA Z614 (MOST RECENT EDITION) - BY OTHERS.
7. SURVEY AND FACILITIES: SURVEY WORK INCLUDING BENCHMARKS, LINES AND LEVELS, PRE-CONSTRUCTION SURVEY, AS-BUILT DRAWINGS BY OTHERS
8. THESE DRAWINGS ARE INTENDED TO BE PRINTED AT 11" X 17" PAGE SIZE. DO NOT SCALE
9. ALL MEASUREMENTS ARE IN METRES (m) UNLESS OTHERWISE STATED
10. EQUIPMENT SHALL COMPLY WITH THE REQUIREMENTS OF CAN/CSA-Z614 (MOST RECENT EDITION) "CHILDREN'S PLAYSPACES AND EQUIPMENT"
11. VISUAL DETAILS INCLUDING BUT NOT LIMITED TO: NET SPACING, ROPE APPEARANCE AND COLOURS ARE FOR CONCEPTUAL PURPOSES ONLY
12. ALWAYS WEAR PROPER PPE AND FOLLOW SAFE PRACTICES.
13. ALL WORK SHALL BE COMPLETED IN ACCORDANCE WITH THE OCCUPATIONAL HEALTH AND SAFETY ACT.
14. CONTRACTOR IS RESPONSIBLE FOR CONFIRMING ALL SITE CONDITIONS AND REPORTING DISCREPANCIES TO EARTHSCAPE IMMEDIATELY.
15. EARTHSCAPE IS NOT RESPONSIBLE FOR THIRD PARTY USE OF THESE DRAWINGS

FASTENERS:

1. METRIC/IMPERIAL DIAMETER CONVERSIONS OF TYPICAL SIZES:
   1. 8mm=5/16", 10mm=3/8", 12mm=1/2", 25mm=1"
   2. ROUND UP TO NEAREST STANDARD LENGTH FOR MANUFACTURER
2. ALL FASTENERS ARE TO BE STAINLESS STEEL (UNLESS OTHERWISE NOTED)
3. ALL BOLT HOLES SHALL BE PRE-DRILLED AND SHALL BE NOT LESS THAN 1mm AND NOT GREATER THAN 2mm LARGER THAN THE NOMINAL HOLE DIAMETER
4. FOR PARTIALLY THREADED SCREWS, EMBED FULL THREAD INTO SECONDARY MEMBER OR TO A DEPTH AS SPECIFIED ON DRAWINGS.
5. WHERE PRE-DRILLING OF SCREWS IS RECOMMENDED BY THE SCREW MANUFACTURER, HOLE DIAMETER TO BE STRICTLY AS PER MANUFACTURER'S INSTRUCTIONS.
6. DO NOT USE IMPACT DRILLS FOR SCREW INSTALLATION.
7. DO NOT USE A HAMMER TO ENGAGE THE FASTENER WITH THE WOOD.
8. ALL FASTENERS TO BE INSTALLED AS POSITIONED ON DRAWINGS.
9. ALL BOLTED CONNECTIONS ARE TO BE SECURED USING VIBRA-TITE "VC-3" THREAD-LOCKING FLUID OR EQUIVALENT

EXCAVATION AND BACKFILL

1. STRIP ALL TOP SOIL, PAVING, AND DELETERIOUS MATERIAL FROM UNDER FOOTINGS.
2. LOCATE ALL SERVICES PRIOR TO COMPLETING EXCAVATION.
3. ALL FOOTINGS SHALL BE PLACED AT A MINIMUM OF 1200mm BELOW GRADE UNLESS OTHERWISE NOTED ON THE DRAWINGS.
4. SUPPORTING SUBGRADE AND FILL TO HAVE A MINIMUM BEARING CAPACITY OF 150 kPa.
5. ALL FOOTINGS AND SLABS TO BE PLACED ON EITHER NATIVE GRAVEL/SAND/CLAY OR 150mm OF GRANULAR A COMPACTED TO A MINIMUM STANDARD PROCTOR DRY DENSITY OF 98%.
6. BENEATH 150mm TOP LAYER OF COMPACTED GRANULAR A, GRANULAR B FILL CAN BE USED AS REQUIRED PLACED IN MAXIMUM 200mm LIFTS, COMPACTED TO A STANDARD PROCTOR DRY DENSITY OF 96%.
7. CONTRACTOR IS RESPONSIBLE FOR SUPPORT OF EXCAVATIONS DURING CONSTRUCTION AS REQUIRED.

CONCRETE

1. ALL CONCRETE WORK AND MATERIALS SHALL BE IN ACCORDANCE WITH CAN/CSA A23.1/2
2. ALL REINFORCING STEEL TO BE IN ACCORDANCE WITH CAN/CSA A23.1/2 INCLUDING FABRICATION, DETAILING, LAP SPLICES, PLACEMENT, FIXING AND COVER.
3. REINFORCING STEEL SHALL COMPLY WITH CAN/CSA G40.18
4. DO NOT ADD WATER TO CONCRETE ONSITE.
5. ENSURE A MINIMUM COVER OF 75mm TO THE GROUND IN ALL BELOW GRADE CONCRETE.
6. CONCRETE MATERIAL TO BE:
   1. FOOTINGS: CLASS F-2 CONCRETE WITH A MINIMUM 28 DAY COMPRESSIVE STRENGTH OF 25 MPa, MAXIMUM WATER/CEMENT RATIO OF 0.55, MAXIMUM COARSE AGGREGATE SIZE OF 20mm, 4-7% AIR CONTENT, AND A MAXIMUM SLUMP OF 50-100mm.
   2. SLAB ON GRADE: CLASS C-2 CONCRETE WITH A MINIMUM 28 DAY COMPRESSIVE STRENGTH OF 32 MPa, MAXIMUM WATER/CEMENT RATIO OF 0.45, MAXIMUM COARSE AGGREGATE SIZE OF 20mm, 5-8% AIR CONTENT AND A MAXIMUM SLUMP OF 50-100mm.
7. CONCRETE REINFORCING TO DEFORMED MINIMUM YIELD STRENGTH OF 400 MPa
8. PIT RUN GRAVEL WILL NOT BE ACCEPTABLE.
9. ALL REINFORCING CHAIRS SHALL BE PLASTIC
10. ALL FORM OIL TO BE NON-STAINING MINERAL OIL, FREE OF KEROSENE.
11. WELDED WIRE MESH SHALL BE IN ACCORDANCE WITH ASTM A1064.
12. VIBRATE ALL CONCRETE TO ENSURE THAT CONCRETE IS FREE FROM VOIDS AND OTHER DEFECTS.
13. MOIST CURE ALL CONCRETE 7 DAYS.
14. IN HOT OR COLD WEATHER CONDITIONS TAKE ADDITIONAL PRECAUTIONS AS PER CAN/CSA A23.1/2.
15. UNLESS NOTED OTHERWISE, FASTEN ALL HARDWARE TO CONCRETE USING EITHER:
    1. SIMPSON STRONG TIE "TITEN HD" Ø½ X 5" SS CONCRETE SCREW
    2. THREADED ROD WITH SIMPSON STRONG TIE "SET 3G" OR HILTI "HY-200" EPOXY.
    3. REFER TO RESPECTIVE MANUFACTURER's INSTRUCTIONS FOR INSTALLATION PROCEDURE

FOR U.S. INSTALLATION SITES USE THESE NOTES

GENERAL NOTES

1. THIS DRAWING IS THE PROPERTY OF EARTHSCAPE. DO NOT COPY OR DISTRIBUTE WITHOUT PERMISSION.
2. EARTHSCAPE RESERVES OWNERSHIP OF ALL DRAWINGS, SPECIFICATIONS, AND OTHER DOCUMENTS, INCLUDING THOSE IN ELECTRONIC FORM, AUTHORED BY EARTHSCAPE. UPON SIGNING CONTRACT, EARTHSCAPE GRANTS THE OWNER LIMITED LICENSE TO USE THE INSTRUMENTS OF SERVICE SOLELY FOR USING AND MAINTAINING, OR ADDING TO THE PROJECT
3. ENGINEERING AND STRUCTURAL REVIEW: EARTHSCAPE PROVIDES STAMPED DRAWINGS AND/OR STRUCTURAL LOAD TESTING FOR ONTARIO, AS REQUIRED BY ASTM F-1487-17. LOCAL ENGINEERING APPROVAL FOR JURISDICTIONS OUTSIDE ONTARIO, IF REQUIRED, TO BE PROVIDED BY OTHERS.
4. EARTHSCAPE DESIGNS AND ENGINEERS FOR A FROST PENETRATION DEPTH OF 48". SLAB ON GRADE CONSTRUCTION IS SUBJECT TO FROST MOVEMENTS. FREE DRAINING SOIL UNDER THE FOOTING IS USED TO MINIMIZE FROST EFFECTS. OVERALL TOWER/SLAB MOVEMENT MAY OCCUR.
5. INSPECTION AND TESTING: INSPECTION, TESTING (INCLUDING CONCRETE TESTING), PRE-CONSTRUCTION SURVEYS TO BE COMPLETED BY OTHERS.
6. SURFACING: WHEN AN IMPACT-ABSORBING SURFACE MATERIAL IS REQUIRED, IT MUST COMPLY WITH ASTM F-1292 (MOST RECENT EDITION) FOR THE DEFINED FALL HEIGHT OF THE EQUIPMENT SPECIFIED IN DRAWINGS BY EARTHSCAPE OR A CONTRACTUALLY OBLIGATED CRITICAL HEIGHT SPECIFIED IN ADVANCE. ENSURE USE ZONES, SAFETY ZONES, AND/OR PROTECTIVE SURFACING ZONES AROUND ALL PLAY EQUIPMENT ARE COMPLIANT WITH ASTM F-1292 (MOST RECENT EDITION) - BY OTHERS.
7. SURVEY AND FACILITIES: SURVEY WORK INCLUDING BENCHMARKS, LINES AND LEVELS, PRE-CONSTRUCTION SURVEY, AS-BUILT DRAWINGS BY OTHERS
8. THESE DRAWINGS ARE INTENDED TO BE PRINTED AT 11" X 17" PAGE SIZE. DO NOT SCALE
9. ALL MEASUREMENTS ARE IN FEET-INCHES UNLESS OTHERWISE STATED
10. EQUIPMENT SHALL COMPLY WITH THE REQUIREMENTS OF ASTM F1487-17 "STANDARD CONSUMER SAFETY PERFORMANCE SPECIFICATION FOR PLAYGROUND EQUIPMENT"
11. VISUAL DETAILS INCLUDING BUT NOT LIMITED TO: NET SPACING, ROPE APPEARANCE AND COLOURS ARE FOR CONCEPTUAL PURPOSES ONLY
12. ALWAYS WEAR PROPER PPE AND FOLLOW SAFE PRACTICES.
13. ALL WORK SHALL BE COMPLETED IN ACCORDANCE WITH THE OCCUPATIONAL HEALTH AND SAFETY ACT.
14. CONTRACTOR IS RESPONSIBLE FOR CONFIRMING ALL SITE CONDITIONS AND REPORTING DISCREPANCIES TO EARTHSCAPE IMMEDIATELY.
15. EARTHSCAPE IS NOT RESPONSIBLE FOR THIRD PARTY USE OF THESE DRAWINGS

FASTENERS

1. METRIC/IMPERIAL DIAMETER CONVERSIONS:
   1. 8mm=5/16", 10mm=3/8", 12mm=1/2", 25mm=1"
   2. ROUND UP TO NEAREST STANDARD LENGTH FOR MANUFACTURER
2. ALL FASTENERS ARE TO BE STAINLESS STEEL (UNLESS OTHERWISE NOTED)
3. ALL BOLT HOLES SHALL BE PRE-DRILLED AND SHALL BE NOT LESS THAN 3/64" AND NOT GREATER THAN 5/64" LARGER THAN THE NOMINAL HOLE DIAMETER
4. FOR PARTIALLY THREADED SCREWS, EMBED FULL THREAD INTO SECONDARY MEMBER OR TO A DEPTH AS SPECIFIED ON DRAWINGS.
5. WHERE PRE-DRILLING OF SCREWS IS RECOMMENDED BY THE SCREW MANUFACTURER, HOLE DIAMETER TO BE STRICTLY AS PER MANUFACTURER'S RECOMMENDATIONS.
6. DO NOT USE IMPACT DRILLS FOR SCREW INSTALLATION.
7. DO NOT USE A HAMMER TO ENGAGE THE FASTENER WITH THE WOOD.
8. ALL FASTENERS TO BE INSTALLED AS POSITIONED ON SHOP DRAWINGS.
9. ALL BOLTED CONNECTIONS ARE TO BE SECURED USING VIBRA-TITE "VC-3" THREAD-LOCKING FLUID OR EQUIVALENT

EXCAVATION AND BACKFILL

1. STRIP ALL TOP SOIL, PAVING, AND DELETERIOUS MATERIAL FROM UNDER FOOTINGS.
2. LOCATE ALL SERVICES PRIOR TO COMPLETING EXCAVATION.
3. ALL FOOTINGS SHALL BE PLACED AT A MINIMUM OF 4' BELOW GRADE UNLESS OTHERWISE NOTED ON THE DRAWINGS.
4. SUPPORTING SUBGRADE AND FILL TO HAVE A MINIMUM BEARING CAPACITY OF 3000PSF.
5. ALL FOOTINGS AND SLABS TO BE PLACED ON EITHER NATIVE GRAVEL/SAND/CLAY OR 6" OF GRANULAR A COMPACTED TO A MINIMUM STANDARD PROCTOR DRY DENSITY OF 98%.
6. BENEATH 6" TOP LAYER OF COMPACTED GRANULAR A, GRANULAR B FILL CAN BE USED AS REQUIRED PLACED IN MAXIMUM 8" LIFTS, COMPACTED TO A STANDARD PROCTOR DRY DENSITY OF 96%.
7. CONTRACTOR IS RESPONSIBLE FOR SUPPORT OF EXCAVATIONS DURING CONSTRUCTION AS REQUIRED.

CONCRETE

1. ALL CONCRETE WORK AND MATERIALS SHALL BE IN ACCORDANCE WITH ACI-301
2. ALL REINFORCING STEEL TO BE IN ACCORDANCE WITH ASTM A615 AND ACI-301 INCLUDING FABRICATION, DETAILING, LAP SPLICES, PLACEMENT, FIXING AND COVER.
3. REINFORCING STEEL SHALL COMPLY WITH ASTM A615
4. DO NOT ADD WATER TO CONCRETE ONSITE.
5. ENSURE A MINIMUM COVER OF 3" TO THE GROUND IN ALL BELOW GRADE CONCRETE.
6. CONCRETE MATERIAL TO BE:
   1. FOOTINGS AND SLABS: CONCRETE WITH A MINIMUM 28 DAY COMPRESSIVE STRENGTH OF 4000 PSI, MAXIMUM WATER/CEMENT RATIO OF 0.50, MAXIMUM COARSE AGGREGATE SIZE OF 3/4", 4-7% AIR CONTENT (WHERE CONCRETE PLACED ABOVE FROST), AND A MAXIMUM SLUMP OF 2 - 4 INCHES.
7. CONCRETE REINFORCING TO DEFORMED MINIMUM YIELD STRENGTH OF 58000 PSI
8. PIT RUN GRAVEL WILL NOT BE ACCEPTABLE.
9. ALL REINFORCING CHAIRS SHALL BE PLASTIC
10. ALL FORM OIL TO BE NON-STAINING MINERAL OIL, FREE OF KEROSENE.
11. WELDED WIRE MESH SHALL BE IN ACCORDANCE WITH ASTM A1064.
12. VIBRATE ALL CONCRETE TO ENSURE THAT CONCRETE IS FREE FROM VOIDS AND OTHER DEFECTS.
13. MOIST CURE ALL CONCRETE 7 DAYS.
14. IN HOT OR COLD WEATHER CONDITIONS TAKE ADDITIONAL PRECAUTIONS AS PER ACI 305 OR 306 RESPECTIVELY.
15. UNLESS NOTED OTHERWISE, FASTEN ALL HARDWARE TO CONCRETE USING EITHER:
    1. SIMPSON STRONG TIE "TITEN HD" Ø½ X 5" SS CONCRETE SCREW
    2. THREADED ROD WITH SIMPSON STRONG TIE "SET 3G" OR HILTI "HY-200" EPOXY
    3. REFER TO RESPECTIVE MANUFACTURER'S INSTRUCTIONS FOR INSTALLATION PROCEDURE
    4.

PROPERTY OF EARTHSCAPE PLAY INC. - DO NOT COPY. DO NOT DISTRIBUTE.

INSTALLATION INSTRUCTIONS

EARTHSCAPE COLLECTIONS

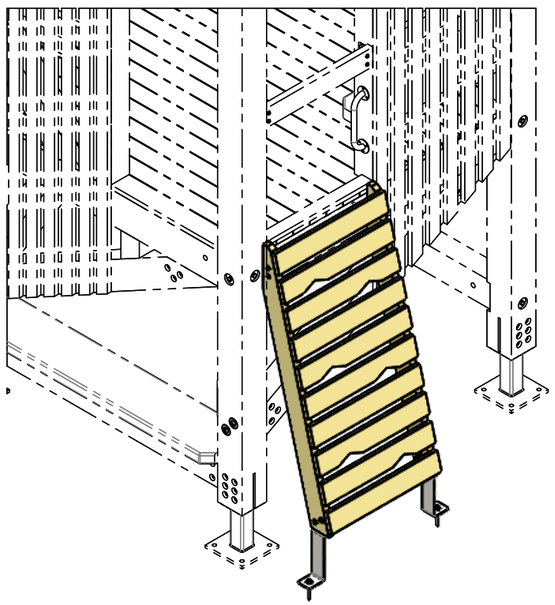

LICENSED PROFESSIONAL ENGINEER
M. JOHNSON
100514620
Sep 22, 2025
PROVINCE OF ONTARIO

WITZEL DYCE
ENGINEERING INC.
PROJECT NO.: 12936-165

CLADDING LADDER

THESE INSTRUCTIONS APPLY TO THE FOLLOWING VERSIONS OF THIS PRODUCT:

F00228 - CLADDING LADDER

WHICH IS DESIGNED TO BE INSTALLED ON THE FOLLOWING PRODUCTS:

1 LEVEL TIMBER TOWER
2 LEVEL TIMBER TOWER
3 LEVEL TIMBER TOWER

NOTE: COLOURS SHOWN ARE REPRESENTATIONAL AND MAY NOT BE THE SAME AS THOSE OF THE SUPPLIED PRODUCT

FOR CSA AND ASTM SPECIFICATIONS AND GENERAL NOTES SEE MAIN STRUCTURE INSTALLATION PACKAGE

PROPERTY OF EARTHSCAPE PLAY INC. - DO NOT COPY. DO NOT DISTRIBUTE.

PLEASE READ ALL INSTRUCTIONS

Before starting to install this equipment be sure to read through and understand these instructions.

If you have any questions, contact your local dealer for assistance before proceeding.

MEASUREMENTS AND STANDARDS

Measurements have been provided in both metres and [feet-inches]. Ensure to follow standards noted for the location in which this play equipment is being installed. Those marked CSA are to be used in Canada and those marked ASTM to be used in the United States.

LIST OF ABBREVIATIONS

AYC = Alaskan Yellow Cedar
WRC = Western Red Cedar
DPS = Designated Play Surface
SS = Stainless Steel
HDG = Hot Dipped Galvanized
WWM = Welded Wire Mesh
TYP = Typical
C/W = Complete With
UNO = Unless Noted Otherwise
EWF = Engineered Wood Fiber
PIP = Poured-In-Place Rubber Surfacing
PT = Pressure Treated

TOOLS SUPPLIED WITH THIS PRODUCT

- No tools supplied

TOOLS THE INSTALLER NEEDS TO SUPPLY

- High torque drill
- 1/2" impact driver
- Set of wood drill bits - up to 1/2"
- Set of impact sockets - up to 1"
- 1/2" ratcheting socket wrench
- T25 drive bit
- T40 drive bit
- Hammer drill
- Concrete drill bit, 1/2" x 8"

EQUIPMENT THE INSTALLER NEEDS TO SUPPLY

- No special equipment required

INSTALLER CREW AND TIME REQUIRED

Number of people needed: 2
Typical total person-hours to install: 2
Time breakdown:

- 1 hours x 2 people to position and anchor the ladder in place

MATERIALS THE INSTALLER NEEDS TO SUPPLY

No additional materails required

WARNINGS

These instructions do not provide specific guidance on the use of tools or the lifting and moving heavy objects. It is assumed that competent people are installing this product who are familiar with using the tools and equipment required and are knowledgeable and skilled at lifting and positioning heavy objects.

PROPERTY OF EARTHSCAPE PLAY INC. - DO NOT COPY. DO NOT DISTRIBUTE.

MAKE SURE YOU HAVE ALL THE PARTS

Examine the equipment and ensure you have all the required parts listed in the table below.

PART IMAGE	ITEM NO.	PART NO.	DESCRIPTION	QTY.
	1	H30059	WASHER 5/8" X 1-1/2" SS	2
	2	H60020	TITEN HD 1/2" X 5" CONCRETE SCREW	2
	3	H16715	WOOD SCREW, WASHER HEAD, M8x80, SS	4
SEE IMAGE THIS SHEET	4		PRE-ASSEMBLED CLADDING LADDER	1

IMAGES OF FASTENERS IN THIS TABLE ARE REPRESENTATIONAL TO HELP IDENTIFY PARTS.

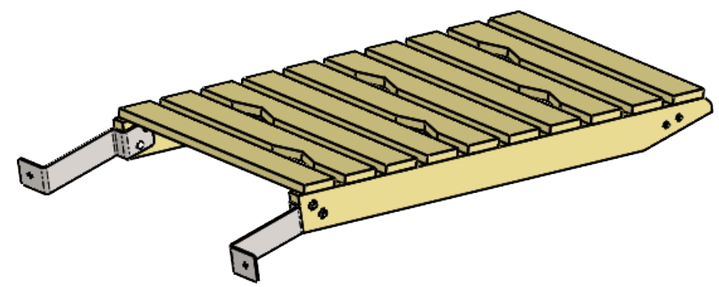

4 PRE-ASSEMBLED CLADDING LADDER

PROPERTY OF EARTHSCAPE PLAY INC. - DO NOT COPY. DO NOT DISTRIBUTE.

CLADDED LADDER INSTALLATION

CLADDING LADDER

STEP 1 - CONFIRM WHERE THE ACCESSORY IS TO BE INSTALLED

Review the complete tower installation package to determine on which side this accessory is to be installed and what the finished product should look like. The images shown on this page are representational and may not match your exact installation.

STEP 2 - POSITION LADDER

Align ladder with correct opening and position so top of ladder is flush with top of grab rail noted in Section A-A this sheet

Bottom of ladder should be located as per dimension noted in Section A-A

STEP 3 - SECURE TOP OF LADDER TO TOWER

You will need to remove the top one or two boards from the ladder to access the attachment brackets. Make sure to save screws and boards to be reinstalled after ladder secured.

Pre-drill holes for screws then screw brackets to timber beam as per Detail B this sheet.

Reinstall removed boards.

STEP 4 - SECURE LADDER BASE BRACKETS TO CONCRETE PAD

Confirm bottom of ladder is still in the correct location as per Step 2, then pre-drill holes in concrete pad and anchor the base bracket to the pad as per Detail C this sheet.

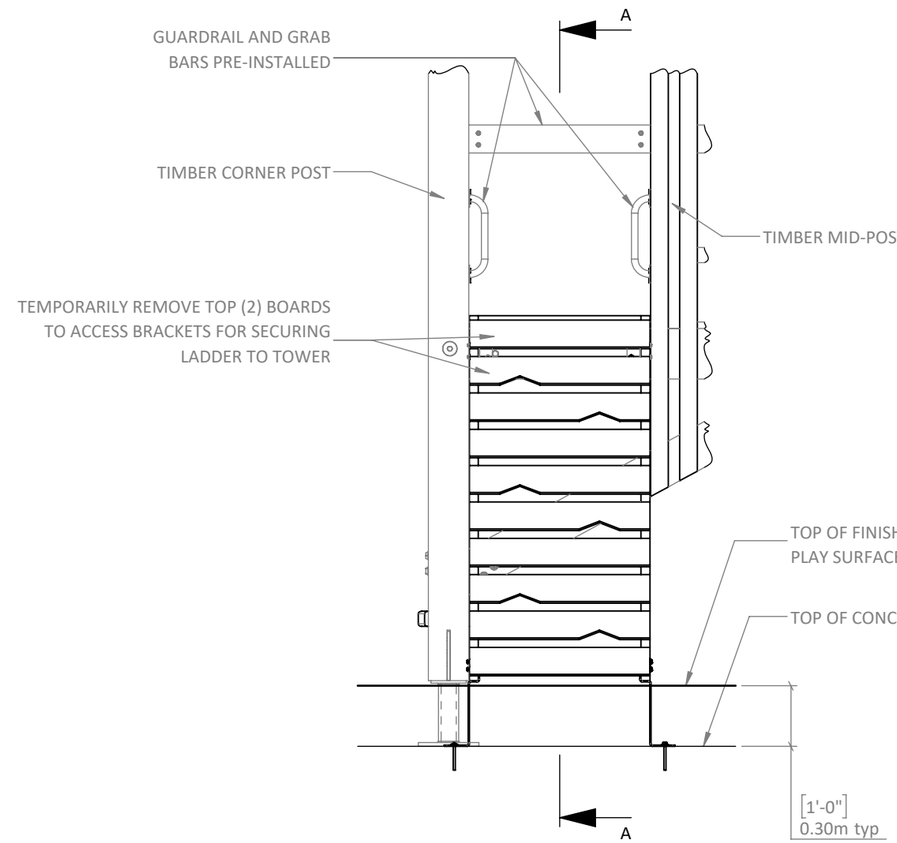

SAMPLE ELEVATION

(ACTUAL INSTALLATION MIGHT BE A MIRRORED VERSION OF THIS VIEW)

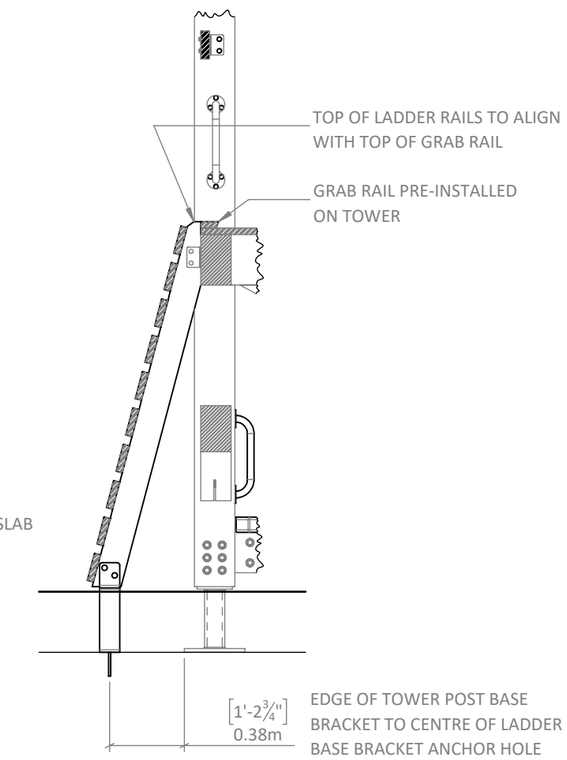

SECTION A-A

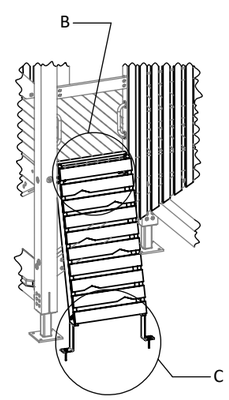

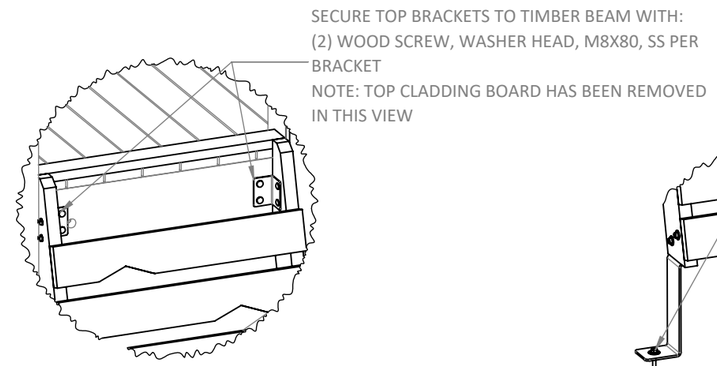

DETAIL B

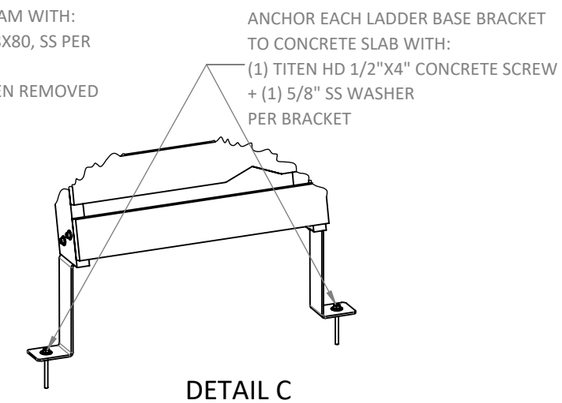

DETAIL C

PROPERTY OF EARTHSCAPE PLAY INC. - DO NOT COPY. DO NOT DISTRIBUTE.

INSTALLATION INSTRUCTIONS

EARTHSCAPE COLLECTIONS

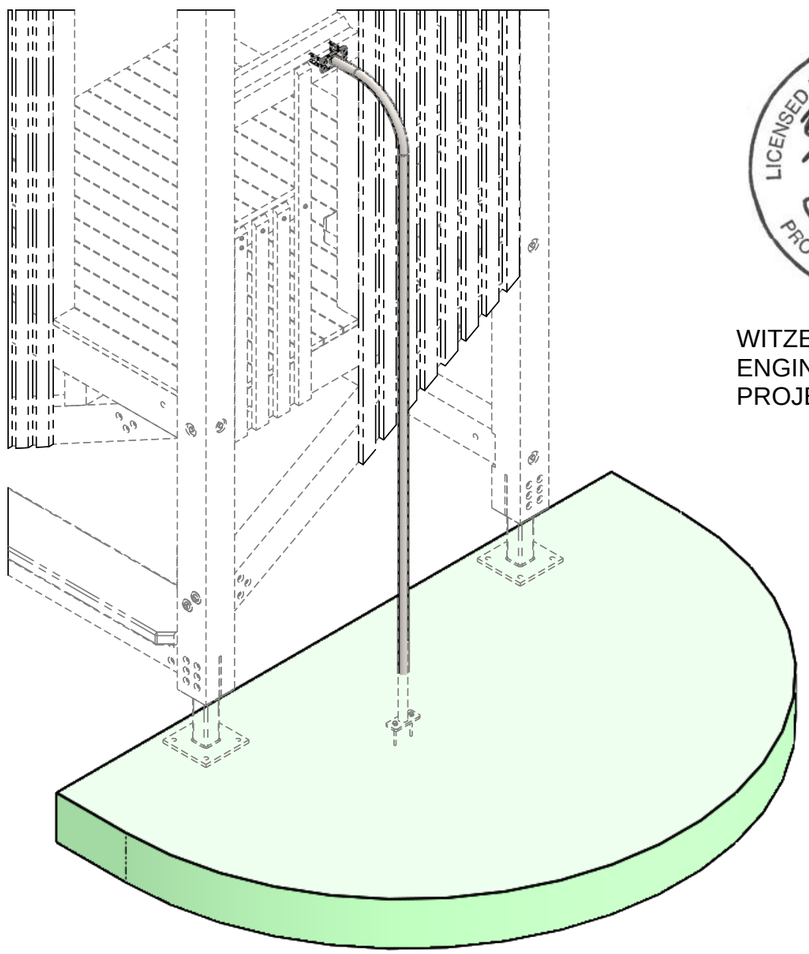

WITZEL DYCE
ENGINEERING INC.
PROJECT NO.: 12936-165

FIRE POLE

THESE INSTRUCTIONS APPLY TO THE FOLLOWING VERSIONS OF THIS PRODUCT:

F00302 - FIRE POLE - SURFACE MOUNT - 6' PLATFORM

WHICH IS DESIGNED TO BE INSTALLED ON THE FOLLOWING PRODUCTS:

1 LEVEL TIMBER TOWERS
2 LEVEL TIMBER TOWER
3 LEVEL TIMBER TOWER

NOTE: COLOURS SHOWN ARE REPRESENTATIONAL AND MAY NOT BE THE SAME AS THOSE OF THE SUPPLIED PRODUCT

FOR CSA AND ASTM SPECIFICATIONS AND GENERAL NOTES SEE MAIN STRUCTURE INSTALLATION PACKAGE

DATE DOCUMENT RELEASED 2024-06-17
DOCUMENT NUMBER: 1051479-R4

PROPERTY OF EARTHSCAPE PLAY INC. - DO NOT COPY. DO NOT DISTRIBUTE.

PLEASE READ ALL INSTRUCTIONS

Before starting to install this equipment be sure to read through and understand these instructions.
If you have any questions, contact your local dealer for assistance before proceeding.

MEASUREMENTS AND STANDARDS

Measurements have been provided in both metres and [feet-inches]. Ensure to follow standards noted for the location in which this play equipment is being installed. Those marked CSA are to be used in Canada and those marked ASTM to be used in the United States.

LIST OF ABBREVIATIONS

AYC = Alaskan Yellow Cedar
WRC = Western Red Cedar
DPS = Designated Play Surface
SS = Stainless Steel
HDG = Hot Dipped Galvanized
WWM = Welded Wire Mesh
TYP = Typical
C/W = Complete With
UNO = Unless Noted Otherwise
EWF = Engineered Wood Fiber
PIP = Poured-In-Place Rubber Surfacing
PT = Pressure Treated

TOOLS SUPPLIED WITH THIS PRODUCT

- No tools supplied

TOOLS THE INSTALLER NEEDS TO SUPPLY

- High torque drill
- Set of wood drill bits - up to 1/2"
- 1/2" impact driver
- Set of impact sockets - up to 1"
- 1/2" ratcheting socket wrench
- T25 drive bit
- T40 drive bit
- Hammer drill
- Concrete drill bit, 1/2" x 8"

EQUIPMENT THE INSTALLER NEEDS TO SUPPLY

- No special equipment required

INSTALLER CREW AND TIME REQUIRED

Number of people needed: 2
Typical total person-hours to install: 2
Time breakdown:

- 1 hour x 2 to position and anchor the fire pole

MATERIALS THE INSTALLER NEEDS TO SUPPLY

- No special materials required

WARNINGS

These instructions do not provide specific guidance on the use of tools or the lifting and moving heavy objects. It is assumed that competent people are installing this product who are familiar with using the tools and equipment required and are knowledgeable and skilled at lifting and positioning heavy objects.

PROPERTY OF EARTHSCAPE PLAY INC. - DO NOT COPY. DO NOT DISTRIBUTE.

MAKE SURE YOU HAVE ALL THE PARTS

Examine the equipment and ensure you have all the required parts listed in the table below.

PART IMAGE	ITEM NO.	PART NO.	DESCRIPTION	QTY.
SEE IMAGE THIS SHEET	1	B00089	FIRE POLE - SURFACE MOUNT	1
	2	H60020	Titen HD 1/2" x 5" Concrete Screw SS	2
	3	H16685	ASSY SK A2 8mm X 100mm SS	4

IMAGES OF FASTENERS IN THIS TABLE ARE REPRESENTATIONAL TO HELP IDENTIFY PARTS.

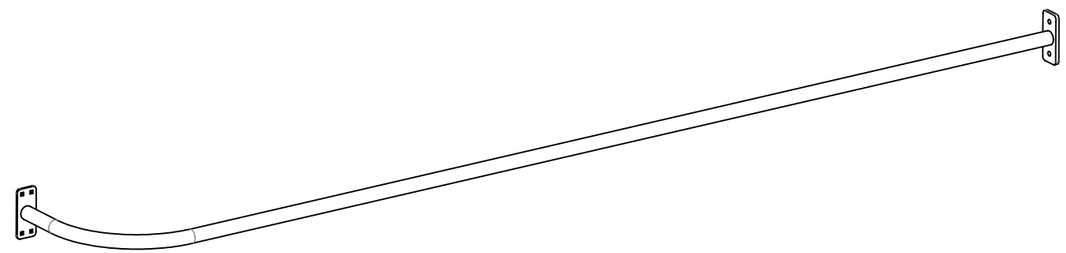

1 FIRE POLE - SURFACE MOUNT

PROPERTY OF EARTHSCAPE PLAY INC. - DO NOT COPY. DO NOT DISTRIBUTE.

FIRE POLE INSTALLATION

STEP 1 - CONFIRM WHERE THE ACCESSORY IS TO BE INSTALLED

Review the complepte tower installation package to determine on which side this accessory is to be installed and what the finished product should look like. The images shown on this page are representational and may not match your exact installation. Your installation could be a mirror image of what is shown on this sheet.

STEP 2 - LAYOUT LOCATION OF FIRE POLE

Mark the centre of the upper opening on the timber where the Fire Pole Top Plate will be secured as per Detail B

Mark the target location on the concrete pad for the centre of the Fire Pole Base Flange relative the the timber tower post base plates as shown in the Sample Elevation and Section A-A.

STEP 3 - ROUGH ALIGNMENT OF FIRE POLE

Align the top mounting plate of fire pole to the upper centre mark and temporarily hold in place.

Align the centre of the Base Flange with the mark on the concrete foundation pad and then check to ensure Fire Pole is plumb and the bottom mounting plate is resting flat on the concrete pad.

STEP 4 - ANCHOR FIRE POLE TO TOWER AND PAD

Secure the top plate to timber beam with screws as shown in Detail B. Predrill all screw holes as per manufacturer's instructions.

Secure base flange to concrete slab as noted in Sample Elevation.

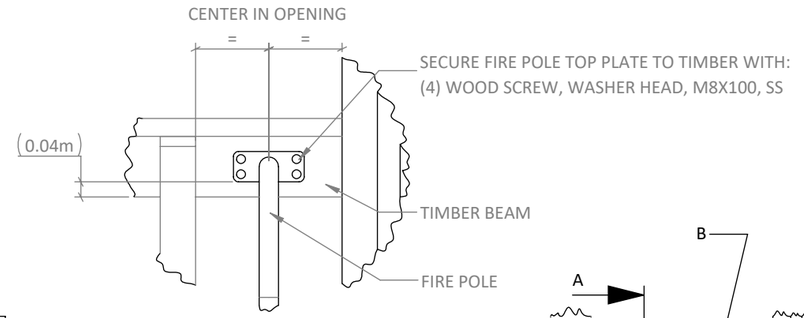

DETAIL B

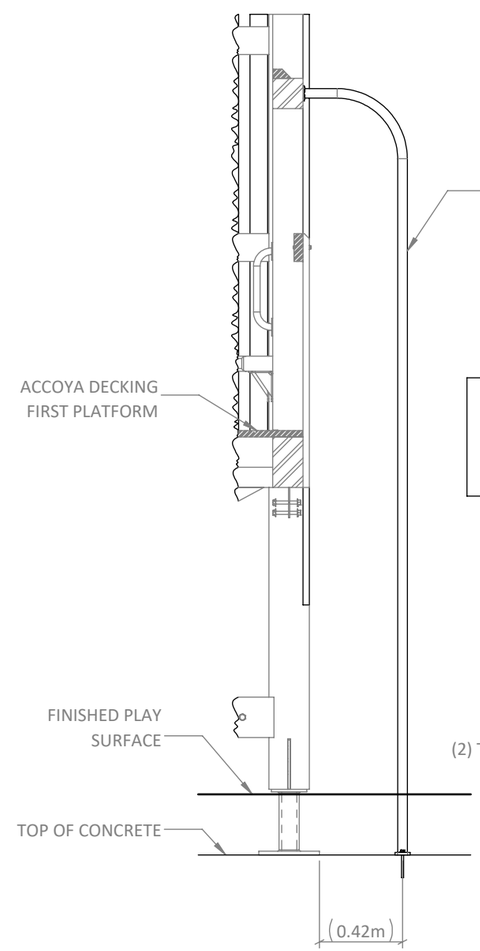

SECTION A-A

DIMENSIONS IN PARENTHESIS ARE APPROXIMATE. MINOR ADJUSTMENT MIGHT BE REQUIRED TO ENSURE FIRE POLE IS PLUMB AND BASE FLANGE RESTING ON CONCRETE PAD

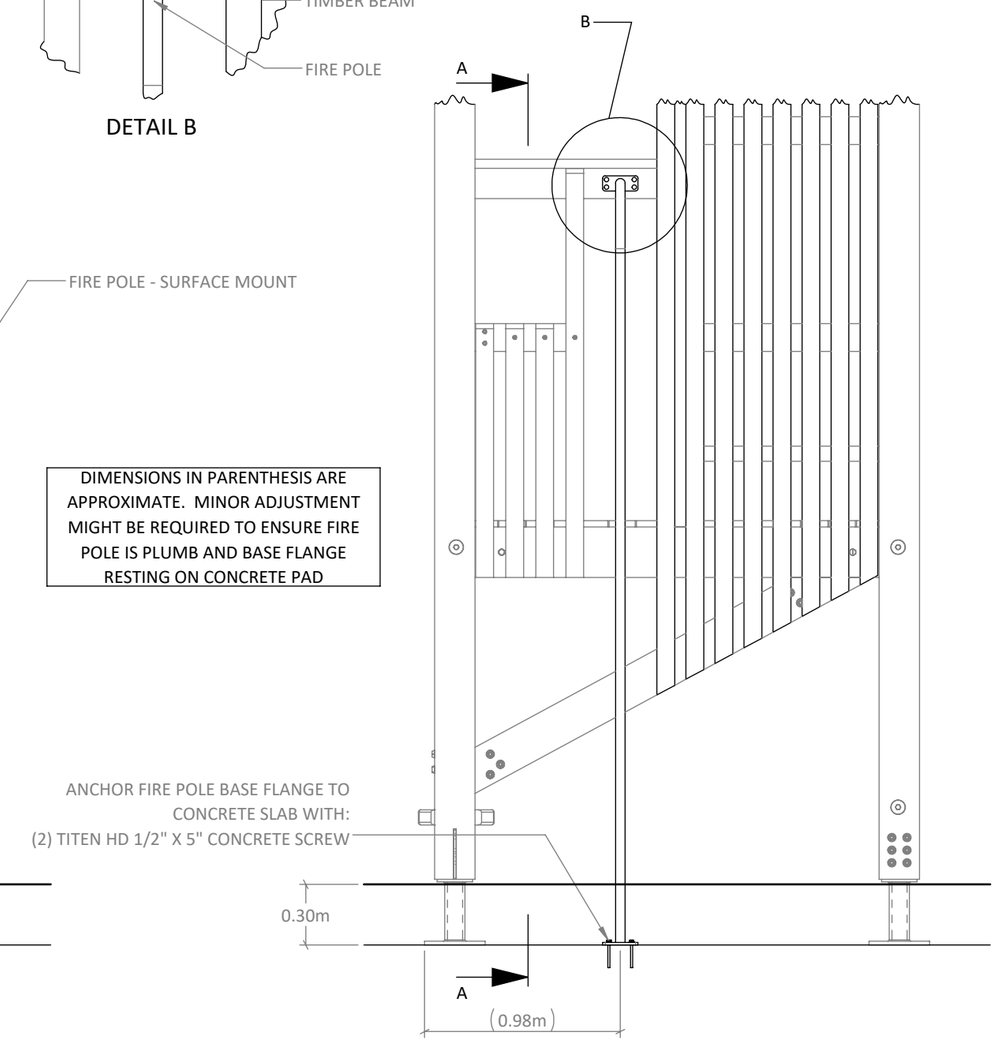

SAMPLE ELEVATION
(ACTUAL INSTALLATION MIGHT BE A MIRRORED VERSION OF THIS VIEW)

PROPERTY OF EARTHSCAPE PLAY INC. - DO NOT COPY. DO NOT DISTRIBUTE.

INSTALLATION INSTRUCTIONS

EARTHSCAPE COLLECTIONS

LICENSED PROFESSIONAL ENGINEER
M. JOHNSON
100514620
Sep 22, 2025
PROVINCE OF ONTARIO

WITZEL DYCE
ENGINEERING INC.
PROJECT NO.: 12936-165

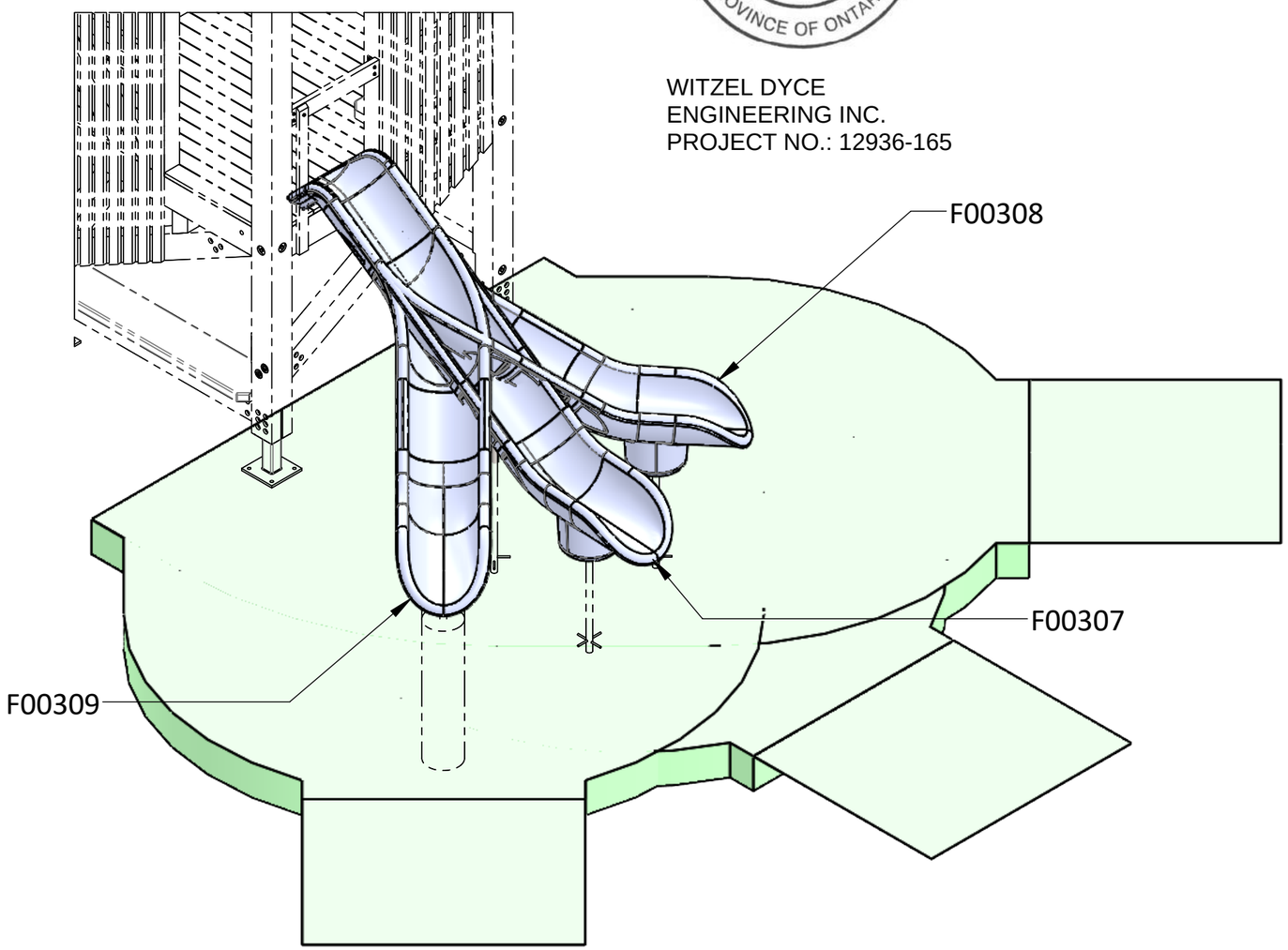

OPEN SLIDES - STARGLIDE

THESE INSTRUCTIONS APPLY TO THE FOLLOWING VERSIONS OF THIS PRODUCT:

F00307 - STARGLIDE 6' OPEN STRAIGHT SLIDE
F00308 - STARGLIDE 6' VEER LEFT SLIDE
F00309 - STARGLIDE 6' VEER RIGHT SLIDE

WHICH ARE DESIGNED TO BE INSTALLED ON THE FOLLOWING PRODUCTS:

F00182 - 2 LEVEL TIMBER TOWER
F00185 - 1 LEVEL TIMBER TOWER
F00407 - 2 LEVEL TIMBER TOWER
F00408 - 3 LEVEL TIMBER TOWER

NOTE: COLOURS SHOWN ARE REPRESENTATIONAL AND MAY NOT BE THE SAME AS THOSE OF THE SUPPLIED PRODUCT

FOR CSA AND ASTM SPECIFICATIONS AND GENERAL NOTES SEE MAIN STRUCTURE INSTALLATION PACKAGE

DATE DOCUMENT RELEASED 2021-09-06
DOCUMENT NUMBER: 1051525-R4

PROPERTY OF EARTHSCAPE PLAY INC. - DO NOT COPY. DO NOT DISTRIBUTE.

PLEASE READ ALL INSTRUCTIONS

Before starting to install this equipment be sure to read through and understand these instructions.

If you have any questions, contact your local dealer for assistance before proceeding.

MEASUREMENTS AND STANDARDS

Measurements have been provided in both metres and [feet-inches]. Ensure to follow standards noted for the location in which this play equipment is being installed. Those marked CSA are to be used in Canada and those marked ASTM to be used in the United States.

LIST OF ABBREVIATIONS

AYC = Alaskan Yellow Cedar
WRC = Western Red Cedar
DPS = Designated Play Surface
SS = Stainless Steel
HDG = Hot Dipped Galvanized
WWM = Welded Wire Mesh
TYP = Typical
C/W = Complete With
UNO = Unless Noted Otherwise
EWF = Engineered Wood Fiber
PIP = Poured-In-Place Rubber Surfacing
PT = Pressure Treated

TOOLS SUPPLIED WITH THIS PRODUCT

- No tools supplied

TOOLS THE INSTALLER NEEDS TO SUPPLY

- High torque drill
  - recommend right angle or flexible drive
- Set of wood drill bits - up to 1/2"
- 1/2" impact driver
- Set of impact sockets - up to 1"
- 1/2" ratcheting socket wrench
- Set of imperial hex keys - up to 1/4"
- T25 drive bit
- T40 drive bit
- Transit or Laser Level
- Rigging and lifting straps

EQUIPMENT THE INSTALLER NEEDS TO SUPPLY

Machine to aid in lifting and positioning the slide.

- Site assembled Starglide plastic slide +/- 80 kg [180 lbs]

INSTALLER CREW AND TIME REQUIRED

Number of people needed: 2
Typical total person-hours to install: 5 + concrete cure time
Time breakdown:

- 1 hour x 2 people for excavation and pouring concrete
- 1 hour x 2 people for onsite fabrication and play equipment installation
- Time for concrete cure
- 1 hour x 1 person to remove bracing and install string probe kit

MATERIALS THE INSTALLER NEEDS TO SUPPLY

- Concrete

WARNINGS

These instructions do not provide specific guidance on the use of tools or the lifting and moving heavy objects. It is assumed that competent people are installing this product who are familiar with using the tools and equipment required and are knowledgeable and skilled at lifting and positioning heavy objects.

PROPERTY OF EARTHSCAPE PLAY INC. - DO NOT COPY. DO NOT DISTRIBUTE.

MAKE SURE YOU HAVE ALL THE PARTS

Examine the equipment and ensure you have all the required parts listed in the tables below.

PART IMAGE	ITEM NO.	PART NO.	DESCRIPTION	QTY.
SEE STANDARD DETAIL SD-035A AT PACK OF THIS PACKAGE	1	B00002	STRING PROBE KIT 135°	1
SEE IMAGE THIS SHEET	2	B00047	BRACKET SLIDE FOOTBUCK	1
SEE IMAGE THIS SHEET	3	B00056-70	SPI SLIDE SUPPORT POST - 70"	1
	4	H16674	ASSY SK A2 8mm X 80mm SS	3
ONE OF THE FOLLOWING SLIDES WILL BE SUPPLIED AS PER THE PRODUCT NUMBER ORDERED				
SEE IMAGE THIS SHEET	5A	SL0010	6' STARGLIDE SLIDE STRAIGHT (F00307)	1
SEE IMAGE THIS SHEET	5B	SL0018	6' STARGLIDE SLIDE VEER LEFT (F00308)	1
SEE IMAGE THIS SHEET	5C	SL0019	6' STARGLIDE SLIDE VEER RIGHT (F00309)	1

IMAGES OF FASTENERS IN THIS TABLE ARE REPRESENTATIONAL AND ARE PROVIDED TO HELP IDENTIFY PARTS.

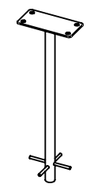

2 BRACKET SLIDE FOOTBUCK

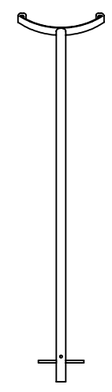

3 SPI SLIDE SUPPORT POST - 70"

5A

6' STARGLIDE SLIDE - STRAIGHT
(FOR PRODUCT F00307)
DOES NOT COME ASSEMBLED

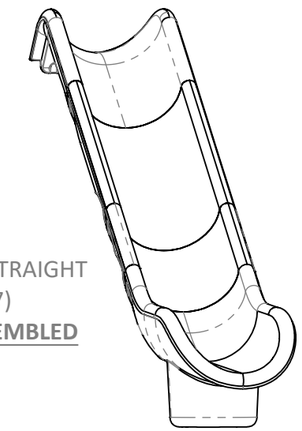

OR

5B

6' STARGLIDE SLIDE - VEER LEFT
(FOR PRODUCT F00308)
DOES NOT COME ASSEMBLED

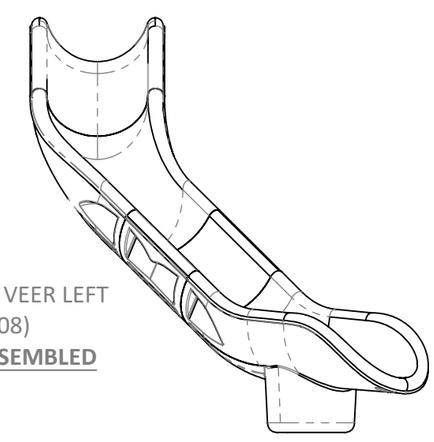

OR

5C

6' STARGLIDE SLIDE - VEER RIGHT
(FOR PRODUCT F00309)
DOES NOT COME ASSEMBLED

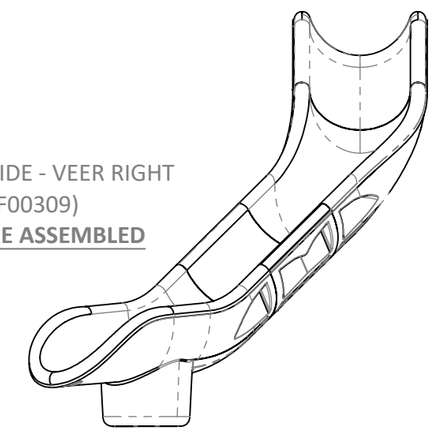

PROPERTY OF EARTHSCAPE PLAY INC. - DO NOT COPY. DO NOT DISTRIBUTE.

POSITION SLIDE

OPEN SLIDES - STARGLIDE

STEP 1 - CONFIRM WHERE THE ACCESSORY IS TO BE INSTALLED

Review the complete tower installation package and determine which side the slide is to be installed and what the finished product should look like. The images shown on this page are representational and may not match your exact installation. Your installation could be a mirror image of what is shown on this sheet and the shape of the slide could differ depending on the product number ordered.

STEP 2 - ASSEMBLE THE SLIDE AND SUPPORT POSTS

The plastic parts of the slide will arrive in pieces. Assemble using manufacturer's supplied hardware and instructions.
Secure the Middle Support Post to the slide (SPI Slide Support Post - 70") as per detail SD-007 at the back of this package
Secure the Slide Base Bracket (Bracket Slide Footbuck) to the slide as per detail SD-006 at the back of this package.

STEP 3 - POSITION SLIDE

With the slide fully assembled, position the top of the slide in the prefabricated notch in the tower. Centre in the opening as per Detail A this sheet.

Position the 2 support posts in the pre-augered holes (**as per complete tower installation package**).

Temporarily brace the slide to ensure the exit of the slide meets the target ***exit height*** above the finished play surface as per the Sample Side Elevation (this sheet) and detail SD-006 at the back of this package.

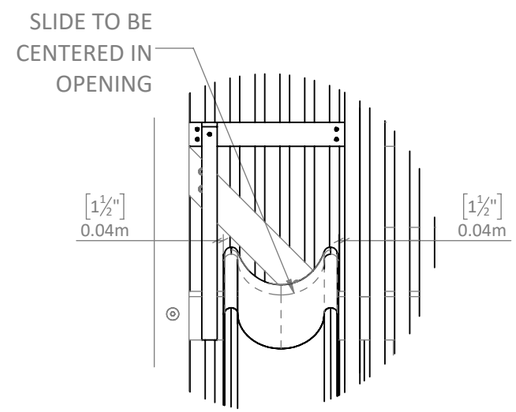

DETAIL A

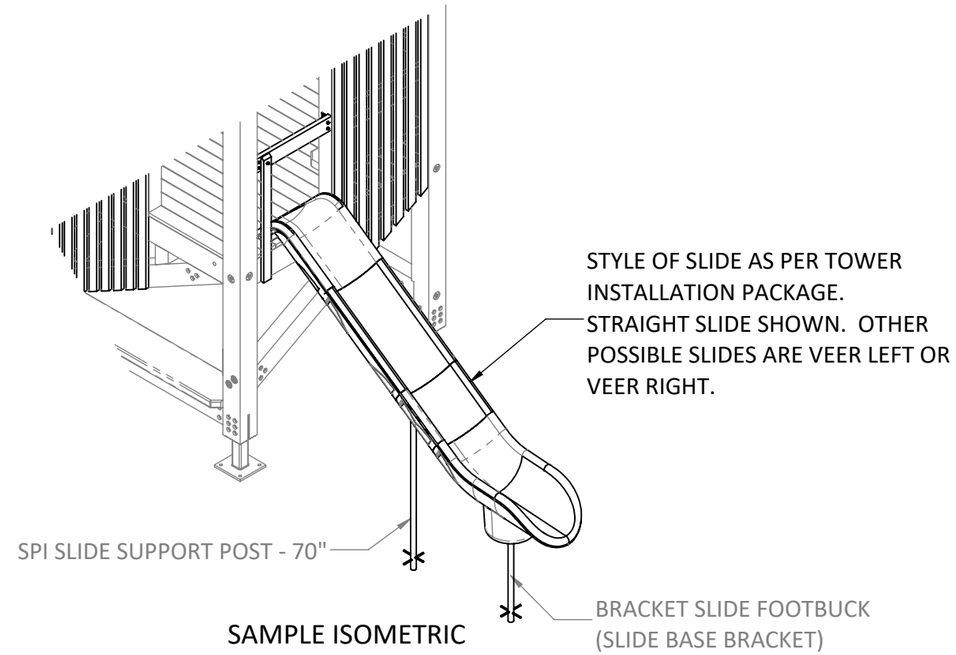

SAMPLE ISOMETRIC

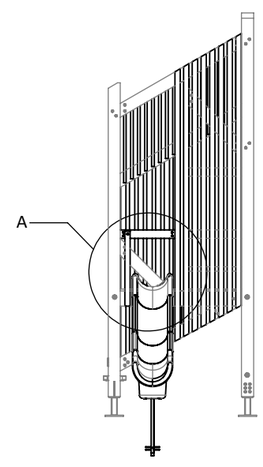

SAMPLE FRONT ELEVATION

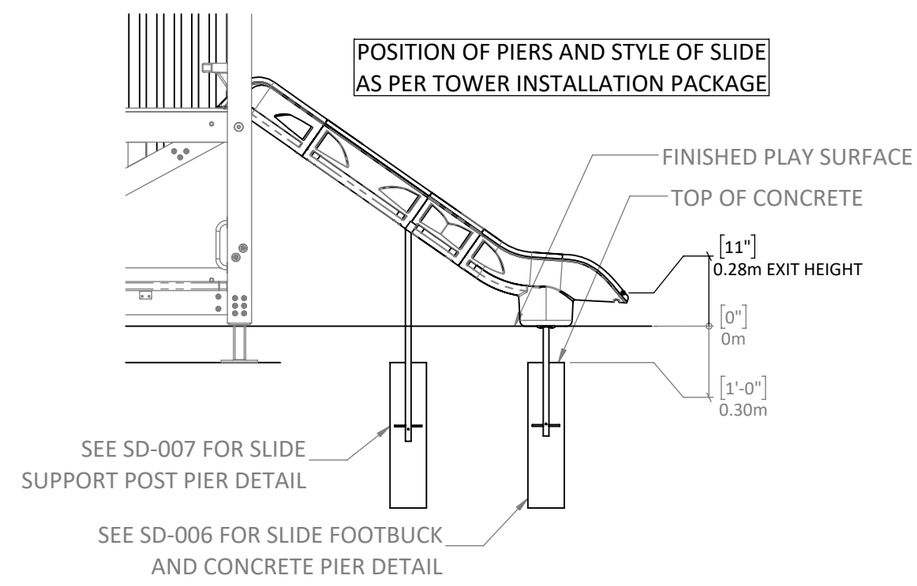

SAMPLE SIDE ELEVATION

PROPERTY OF EARTHSCAPE PLAY INC. - DO NOT COPY. DO NOT DISTRIBUTE.

STEP 4 - SECURE TOP OF SLIDE TO TOWER

Predrill and install the screws at the top of the slide as per Detail B this sheet

STEP 5 - POUR CONCRETE PIERS

Pour concrete piers as per details SD-006 and SD-007 at back of this package. Allow concrete to cure prior to proceeding to step 6.

STEP 6 - REMOVE BRACING

Once concrete piers have cured, remove temporary slide bracing.

STEP 7 - INSTALL STRING PROBE KIT

Install the string probe kit at the top of the slide as per detail SD-035A at the back of this package.

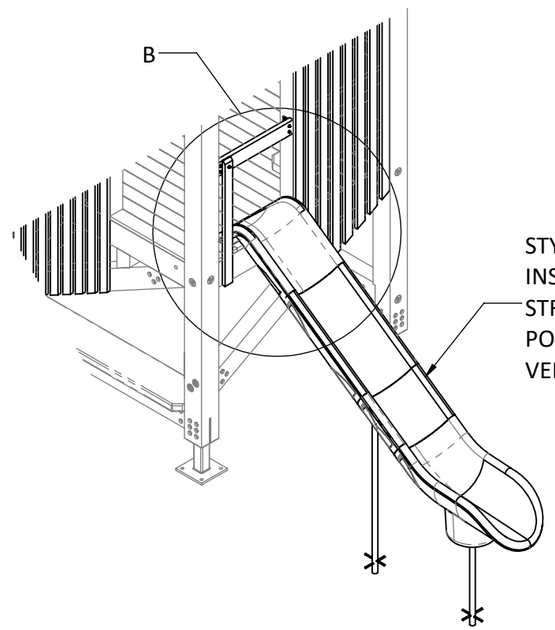

SAMPLE ISOMETRIC

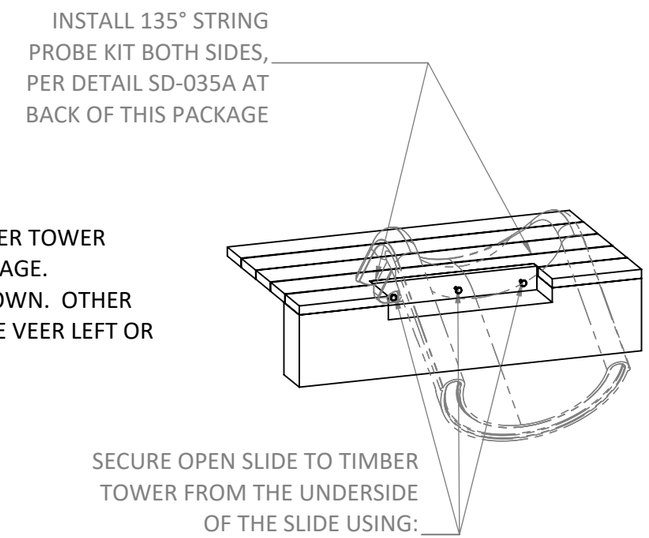

DETAIL B

PROPERTY OF EARTHSCAPE PLAY INC. - DO NOT COPY. DO NOT DISTRIBUTE.

SD-006

OPEN SLIDES - STARGLIDE

NOTES:

1. THIS CONNECTION DETAIL IS ONLY INTENDED TO SHOW AN ISOLATED SECTION. REFER TO THE APPROPRIATE DETAILS AS NOTED IN THE CONSTRUCTION DRAWINGS FOR ALL OTHER INFORMATION
2. IF SLIDE HEIGHT IS LESS THAN 1.2m [47.2"], EXIT HEIGHT MUST BE FROM 0-275mm [0-10.8"] ABOVE GRADE
3. IF SLIDE HEIGHT IS MORE THAN 1.2M [47.2"], EXIT HEIGHT MUST BE BETWEEN 175-380mm [6.9-15"] ABOVE GRADE
4. SLIDE EXIT HEIGHT TO BE SPECIFICALLY NOTED IN PROJECT INSTALLATION DRAWING

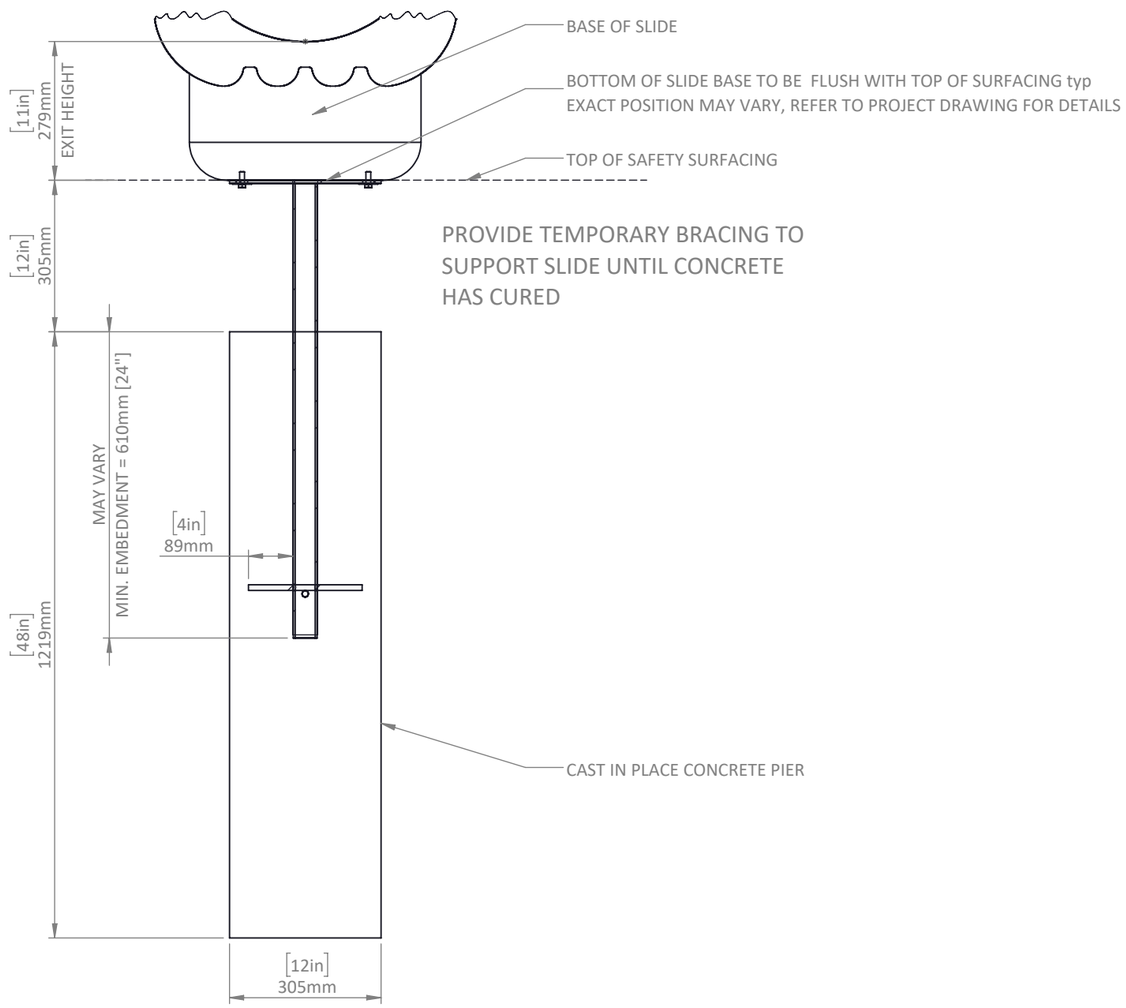

HARDWARE REFERENCE LIST

ITEM NO.	PartNo	DESCRIPTION	QTY.
1	B00047	Bracket Slide Footbuck	1
2	H30052	Washer 3/8" x 1-1/2" SS Fender	4
3	H10244	Hex Cap Screw 3/8-16 x 1 SS full thread	4

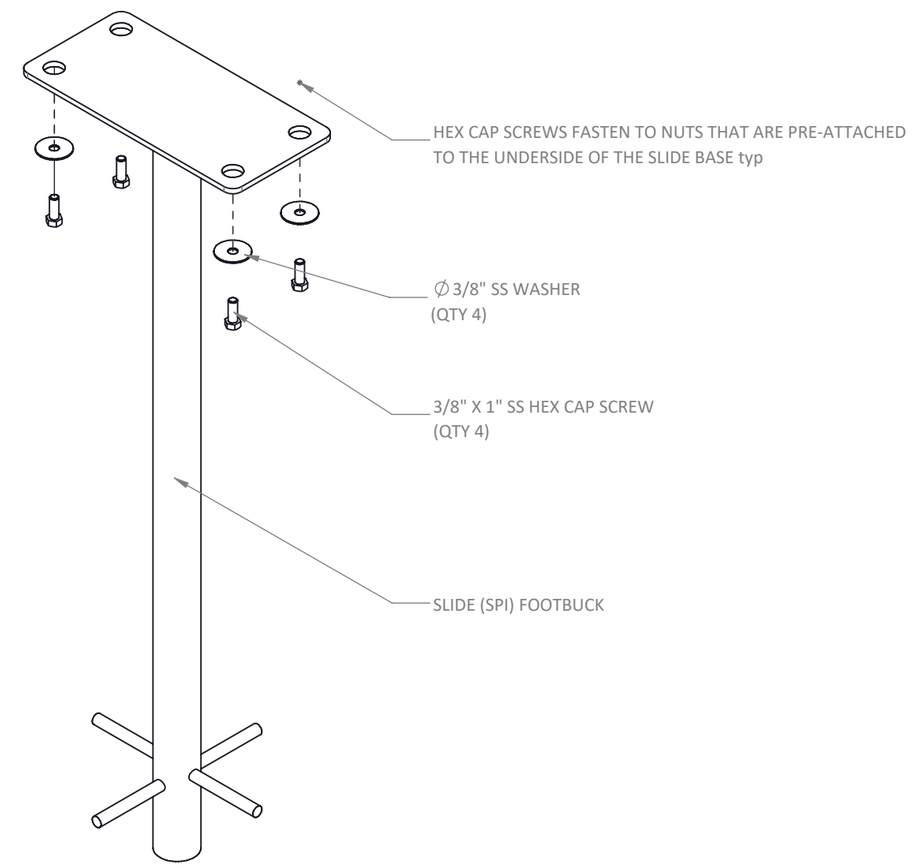

SLIDE (SPI) BASE BRACKET INSTALLATION

PROPERTY OF EARTHSCAPE PLAY INC. - DO NOT COPY. DO NOT DISTRIBUTE.

SD-007

OPEN SLIDES - STARGLIDE

IF REQUIRED, SLIDE POSTS TO BE CUT TO LENGTH ON SITE BY CONTRACTOR ONCE GRADE HAS BEEN ESTABLISHED
IF SLIDE HEIGHT IS LESS THAN 1.2m [47.2"], EXIT HEIGHT MUST BE FROM 0-275mm [0-10.8"] ABOVE GRADE
IF SLIDE HEIGHT IS MORE THAN 1.2M [47.2"], EXIT HEIGHT MUST BE BETWEEN 175-380mm [6.9-15"] ABOVE GRADE

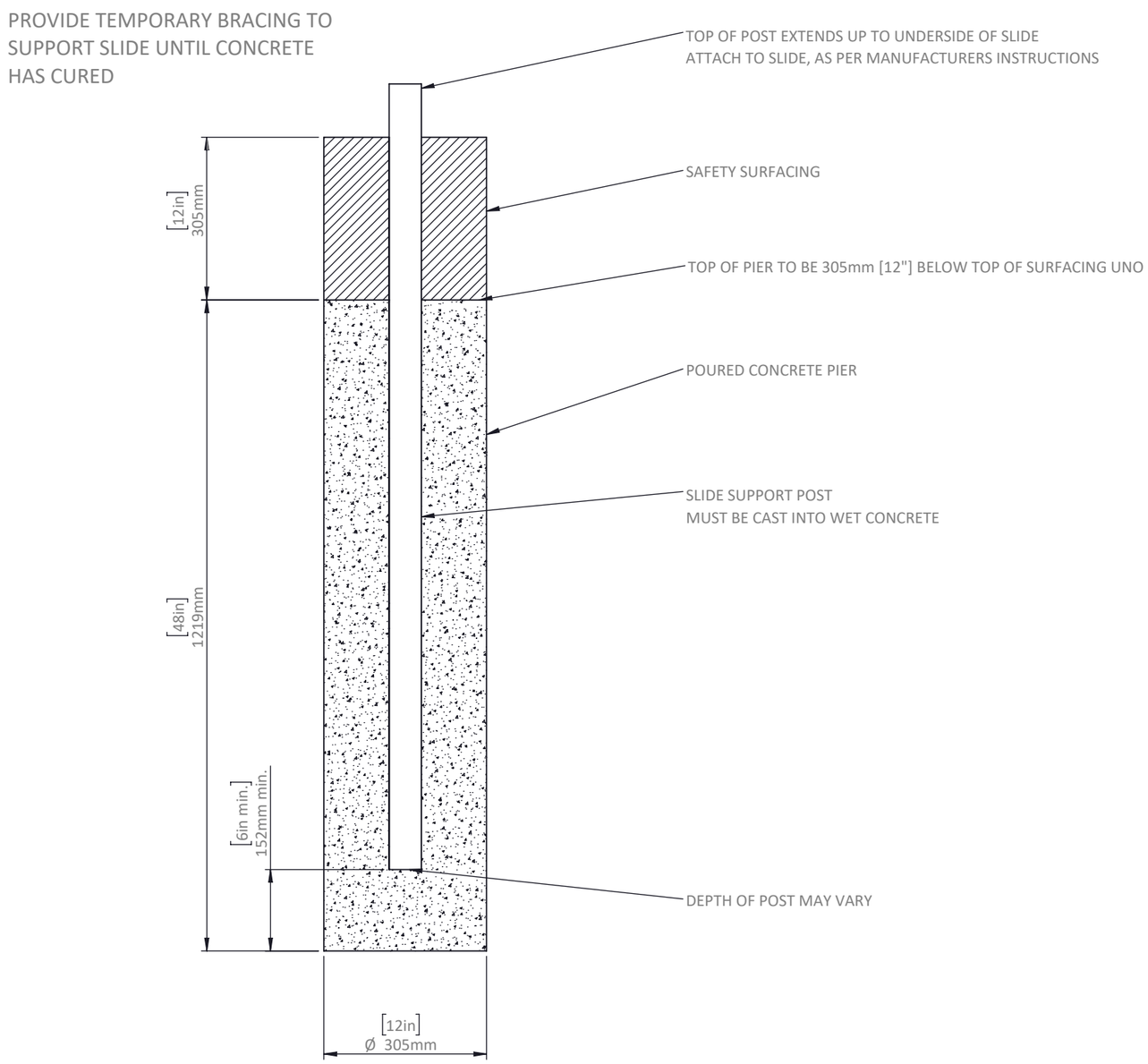

SLIDE SUPORT POST PIER INSTALLATION

PROPERTY OF EARTHSCAPE PLAY INC. - DO NOT COPY. DO NOT DISTRIBUTE.

SD-035A

OPEN SLIDES - STARGLIDE

NOTES:

1. REFER TO "GENERAL NOTES" SHEET FOR ALL GENERAL NOTES
2. THIS CONNECTION DETAIL IS ONLY INTENDED TO SHOW AN ISOLATED SECTION. REFER TO THE APPROPRIATE DETAILS AS NOTED IN THE INSTALLATION PACKAGE FOR ALL OTHER INFORMATION

B00002 KIT BOM			
ITEM NO.	PartNo	DESCRIPTION	QTY.
1	B00017	Bracket Slide String Probe 135°	2
2	H13225	Button Socket Head Cap Screw 3/8-16 x 1 SS	2
3	H16685	ASSY SK A2 8mm x 100mm SS	2
4	H30053	Washer 3/8" x 7/8" SS	2
5	H40071	Flat Rivet Nut 3/8"-16 SS	2
ITEMS BELOW ARE NOT SHOWN IN THIS DETAIL. THEY ARE USED FOR MOUNTING THE SLIDE BASE BRACKET. SEE SD-006 FOR MORE INFORMATION.			
6	H10244	Hex Cap Screw 3/8-16 x 1 SS full thread	4
7	H30052	Washer 3/8" x 1-1/2" SS Fender	4

*ONLY USE ONE KIT PER SLIDE

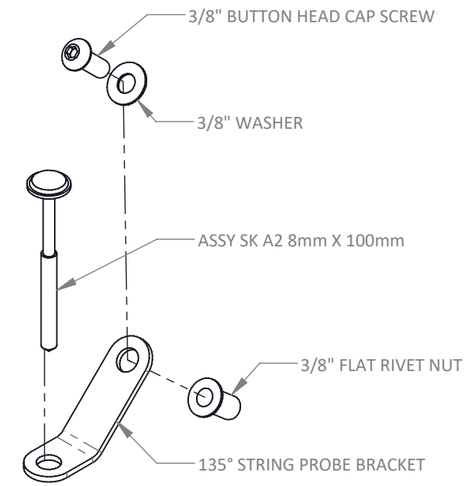

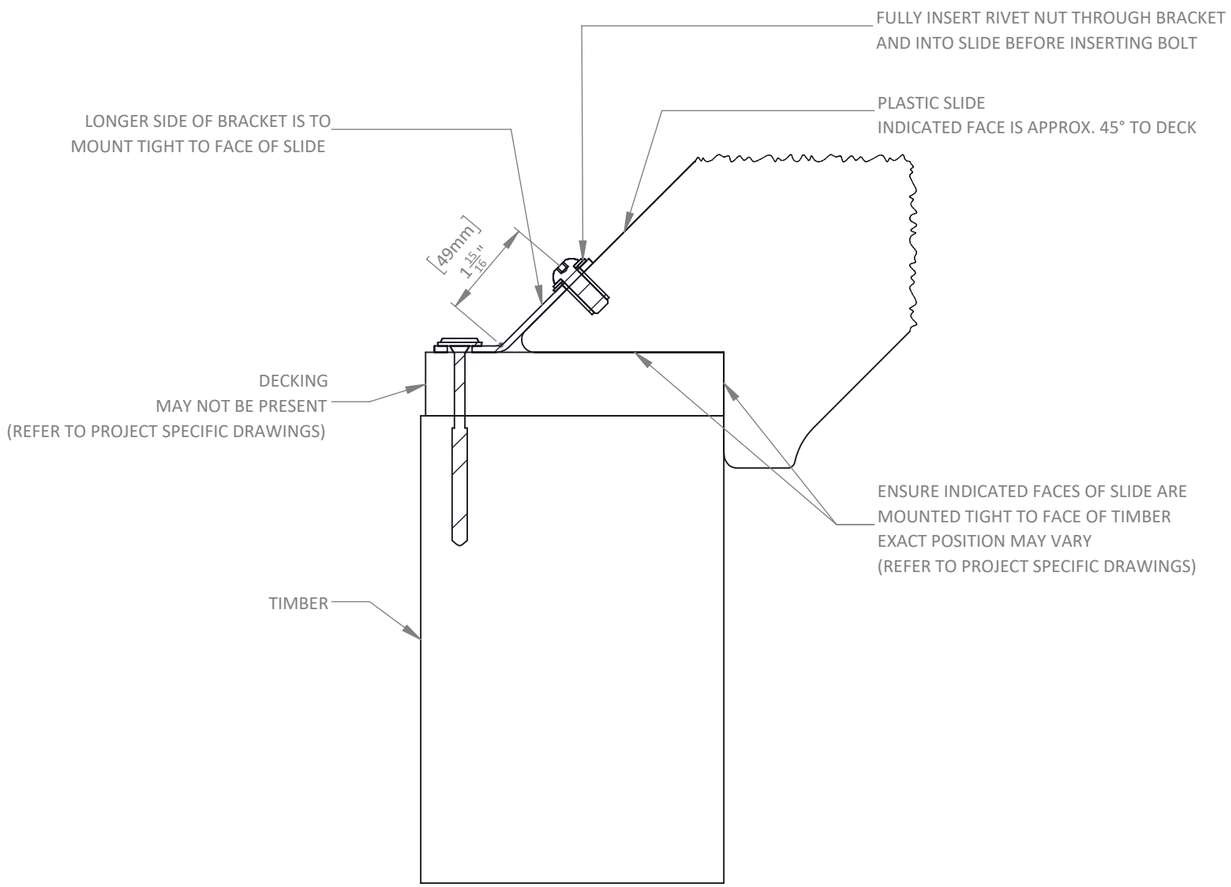

DETAIL A

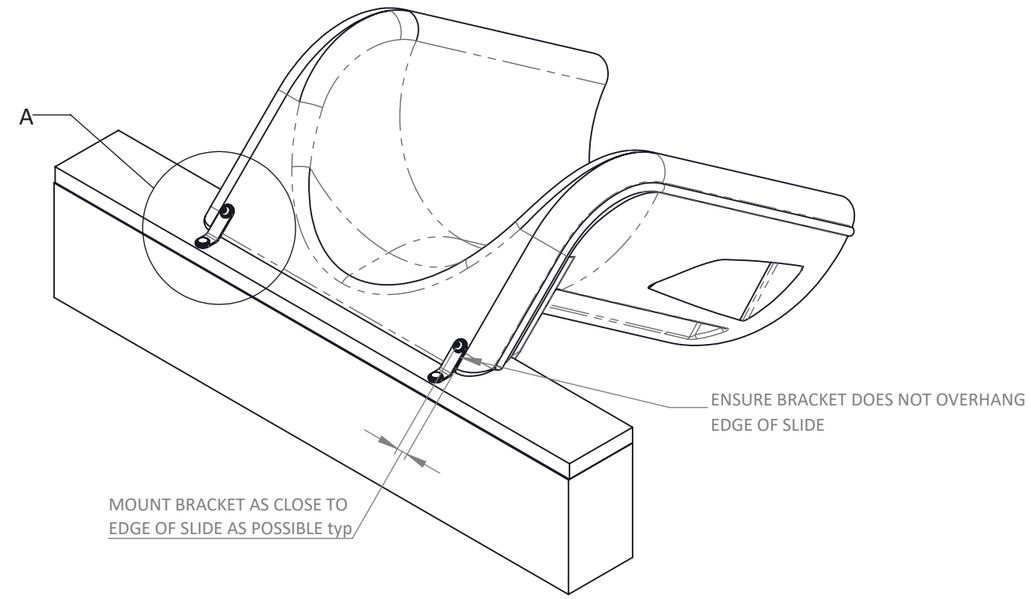

135° STRING PROBE BRACKET INSTALLATION

DATE DOCUMENT RELEASED 2021-09-06
DOCUMENT NUMBER: 1051525 - R4

PROPERTY OF EARTHSCAPE PLAY INC. - DO NOT COPY. DO NOT DISTRIBUTE.

INSTALLATION INSTRUCTIONS

EARTHSCAPE COLLECTIONS

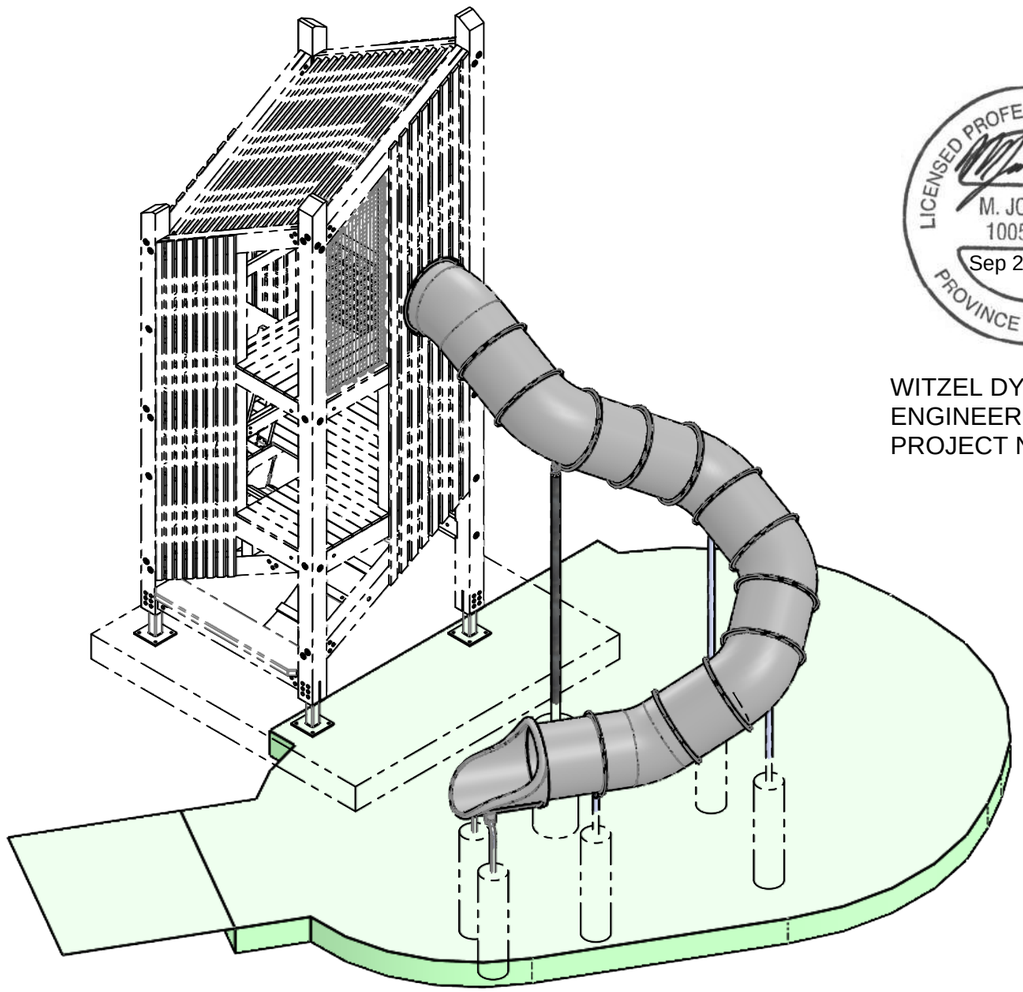

LICENSED PROFESSIONAL ENGINEER
M. JOHNSON
100514620
Sep 22, 2025
PROVINCE OF ONTARIO

WITZEL DYCE
ENGINEERING INC.
PROJECT NO.: 12936-165

PLASTIC TUBE SLIDE - FLANGE - 12' - TURN RIGHT

THESE INSTRUCTIONS APPLY TO THE FOLLOWING VERSIONS OF THIS PRODUCT:

F00316 - PLASTIC TUBE SLIDE - FLANGE - 12' - TURN RIGHT

WHICH IS DESIGNED TO BE INSTALLED ON THE FOLLOWING PRODUCTS:

F00407 - 2 LEVEL TIMBER TOWER
F00408 - 3 LEVEL TIMBER TOWER

NOTE: COLOURS SHOWN ARE REPRESENTATIONAL AND MAY NOT BE THE SAME AS THOSE OF THE SUPPLIED PRODUCT

FOR CSA AND ASTM SPECIFICATIONS AND GENERAL NOTES, SEE MAIN STRUCTURE INSTALLATION PACKAGE.

DATE DOCUMENT RELEASED 2022-11-09
DOCUMENT NUMBER: 1074101-R2

PROPERTY OF EARTHSCAPE PLAY INC. - DO NOT COPY. DO NOT DISTRIBUTE.

PLEASE READ ALL INSTRUCTIONS

Before starting to install this equipment be sure to read through and understand these instructions.

If you have any questions, contact your local dealer for assistance before proceeding.

MEASUREMENTS AND STANDARDS

Measurements have been provided in both metres and [feet-inches]. Ensure to follow standards noted for the location in which this play equipment is being installed. Those marked CSA are to be used in Canada and those marked ASTM to be used in the United States.

LIST OF ABBREVIATIONS

AYC = Alaskan Yellow Cedar
WRC = Western Red Cedar
DPS = Designated Play Surface
SS = Stainless Steel
HDG = Hot Dipped Galvanized
WWM = Welded Wire Mesh
TYP = Typical
C/W = Complete With
UNO = Unless Noted Otherwise
EWF = Engineered Wood Fiber
PIP = Poured-In-Place Rubber Surfacing
PT = Pressure Treated

TOOLS SUPPLIED WITH THIS PRODUCT

- T00047 - Tri Groove Drive (Fits 5/16", 3/8", 8mm AND 10mm)

TOOLS THE INSTALLER NEEDS TO SUPPLY

- High torque drill
- 1/2" impact driver
- Set of impact sockets - up to 1"
- 1/2" ratcheting socket wrench
- Set of hex keys
- Set of wood drill bits - up to 1/2"
- T25 drive bit
- T40 drive bit
- Angle grinder (with course 24 grit sanding disks and metal cut off disks)
- Transit or Laser Level
- Rigging and lifting straps

EQUIPMENT THE INSTALLER NEEDS TO SUPPLY

Machine to lift and position heaviest element.

- Site assembled slide +/- 250 kg [560 lbs]

Machine or scaffolding to allow installers to work safely at heights.

INSTALLER CREW AND TIME REQUIRED

Number of people needed: 2
Typical total person-hours to install: 24 + concrete cure time

Time breakdown:

- 2 hours x 2 people for excavation
- 7 hours x 2 people for onsite fabrication and play equipment installation
- 2 hours x 2 people for pouring concrete
- Time for concrete cure
- 1 hours x 2 people for temporary brace removal

MATERIALS THE INSTALLER NEEDS TO SUPPLY

- Threadmate threadlocker Vibra-Tite VC-3 (or equal)
- Concrete

WARNINGS

These instructions do not provide specific guidance on the use of tools or the lifting and moving heavy objects. It is assumed that competent people are installing this product who are familiar with using the tools and equipment required and are knowledgeable and skilled at lifting and positioning heavy objects.

PROPERTY OF EARTHSCAPE PLAY INC. - DO NOT COPY. DO NOT DISTRIBUTE.

SUPPLIED PARTS

PLASTIC TUBE SLIDE - FLANGE - 12' - TURN RIGHT

MAKE SURE YOU HAVE ALL THE PARTS

Examine the equipment and ensure you have all the required parts listed in the table below.

PART IMAGE	ITEM NO.	PART NO.	DESCRIPTION	QTY.
	1	H13224	BUTTON SOCKET HEAD CAP SCREW 3/8-16 X 7/8 SS	13
	2	H30053	WASHER 3/8" X 7/8" SS	13
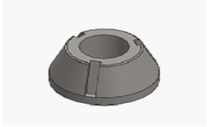	3	H40032	TRI-GROOVE NUT 3/8"-16	13
NO IMAGE PROVIDED	4	T00047	TRI GROOVE DRIVE (FITS 5/16", 3/8", 8mm AND 10mm)	1
SEE IMAGE THIS SHEET	5	SL0030	PLASTIC TUBE SLIDE - FLANGE - 12' - TURN RIGHT	1

IMAGES OF FASTENERS IN THIS TABLE ARE REPRESENTATIONAL TO HELP IDENTIFY PARTS.

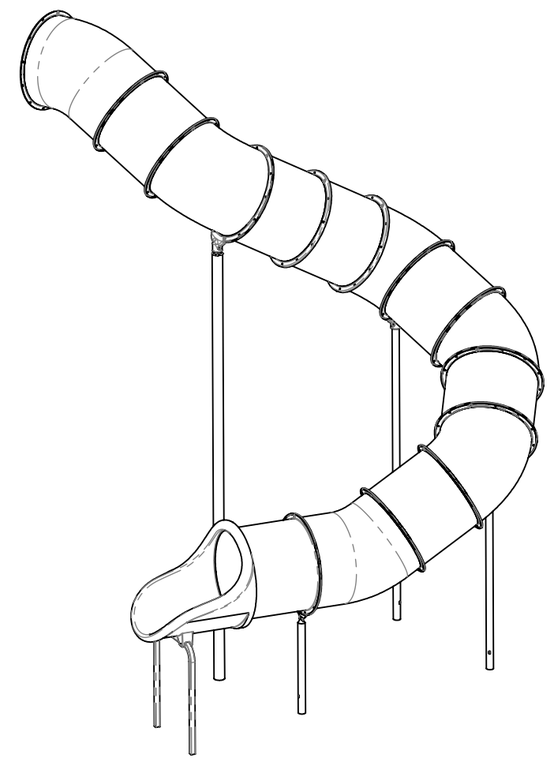

SL0030 - PLASTIC TUBE SLIDE - FLANGE - 12' - TURN RIGHT

(DOES NOT SHIP PRE-ASSEMBLED)

PROPERTY OF EARTHSCAPE PLAY INC. - DO NOT COPY. DO NOT DISTRIBUTE.

FINISHED PRODUCT

PLASTIC TUBE SLIDE - FLANGE - 12' - TURN RIGHT

WHAT THE FINISHED PRODUCT LOOKS LIKE

Finished play surface and concrete foundations by Installer.

The foundation design shown here might be different than what is shown in the main tower installation package. If any differences are noted, the main installation package shall take precedent over the details shown here.

The foundation detail provided in these instructions has been developed assuming typical soil conditions specified in general notes. If the subgrade encountered does not meet these conditions, the subgrade must be improved or revisions made to this detail. Revisions to the detail are the responsibility of the Installer and it is strongly recommended any changes be reviewed and approved by a registered engineer.

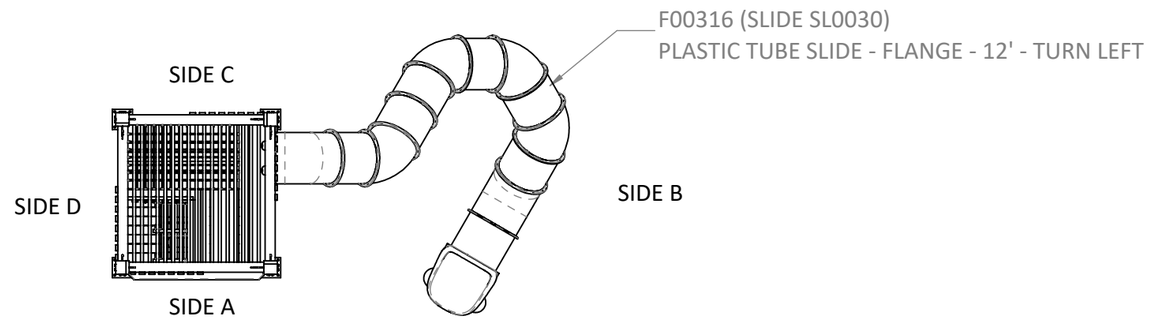

PLAN VIEW

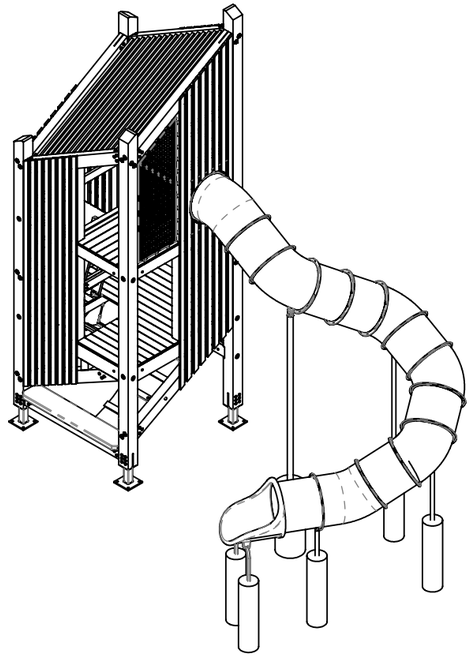

ISOMETRIC VIEW

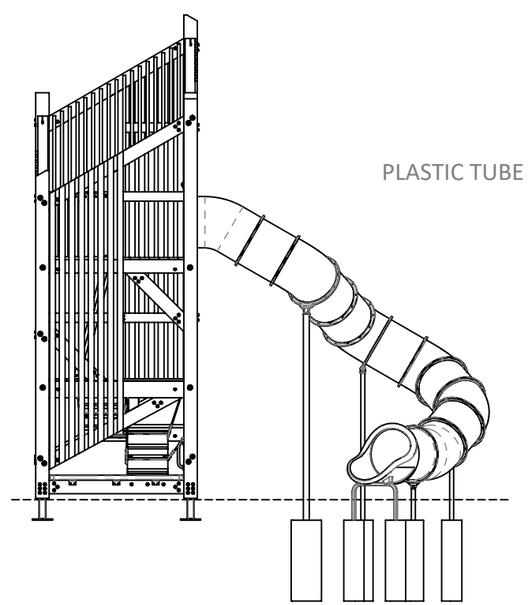

SIDE A ELEVATION

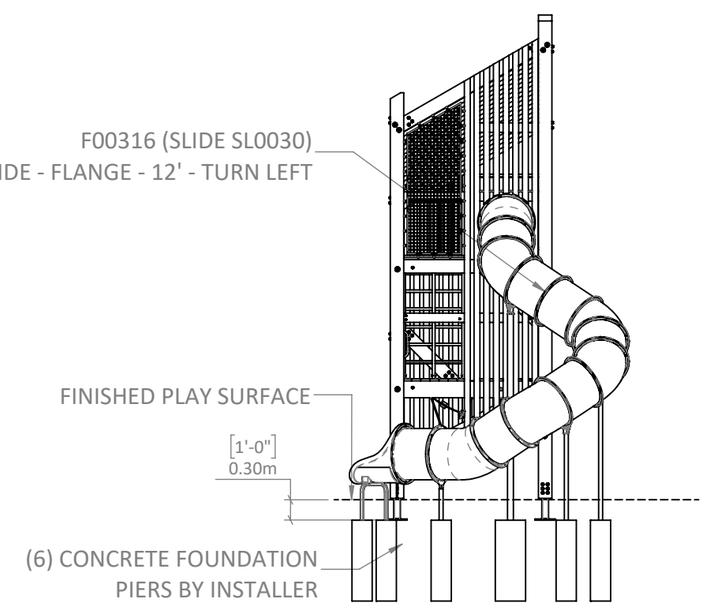

SIDE B ELEVATION

PROPERTY OF EARTHSCAPE PLAY INC. - DO NOT COPY. DO NOT DISTRIBUTE.

LOCATE PLAY EQUIPMENT

PLASTIC TUBE SLIDE - FLANGE - 12' - TURN RIGHT

STEP 1 - LOCATING THE EQUIPMENT ON SITE

Review the complete tower installation package to determine what the finished product should look like. The images shown in this package are representational and may not match your exact installation.

Ensure you know what the designed elevation is for the finished safety surface. All heights provided in these instructions will be relative to the finished play surface. The finished surface elevation is not within the scope of these instructions and should be provided by others.

THESE INSTRUCTIONS ARE BASED ON A STANDARD WHICH ASSUMES A LEVEL PLAYING SURFACE THAT IS 305mm (12") DEEP.

STEP 2 - LAYOUT SLIDE PIERS

Layout the centre of all slide piers using the pier layout plan and the pier location table this sheet. Use the corners of the tower post base brackets noted as reference points in the complete tower installation package.

STEP 3 - AUGER HOLES

Auger all slide pier holes as per Typical Augered Pier detail this sheet as per the diameter noted in Pier Layout Table this sheet. Note depth of augured hole provided from the standard **finished play surface grade**. Finished grades are not within the scope of these instructions and should be provided by others.

SLIDE SUPPORT POSTS TO BE CAST IN PLACE DURING INSTALLATION.

DO NOT POUR CONCRETE YET.

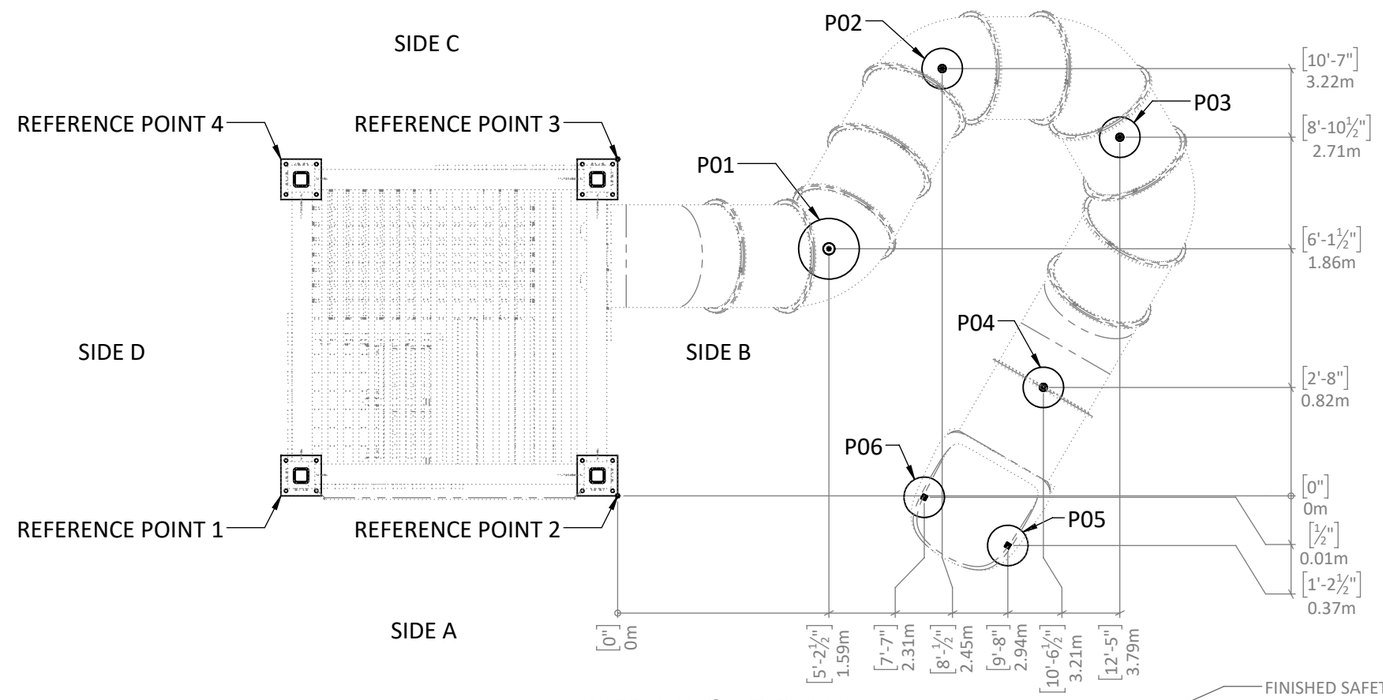

PIER LAYOUT PLAN

PIER LAYOUT TABLE			
PIER I.D.	RAY FROM REF. POINT 2	RAY FROM REF. POINT 3	PIER DIAMETER
P01	[8'-½"] 2.45m	[5'-8"] 1.73m	[1'-6"] ∅0.46m
P02	[13'-3½"] 4.05m	[8'-4"] 2.54m	[1'-0"] ∅0.30m
P03	[15'-3"] 4.65m	[12'-5½"] 3.79m	[1'-0"] ∅0.30m
P04	[10'-10½"] 3.31m	[11'-11½"] 3.64m	[1'-0"] ∅0.30m
P05	[9'-9"] 2.97m	[13'-7"] 4.14m	[1'-0"] ∅0.30m
P06	[7'-7"] 2.31m	[11'-3½"] 3.44m	[1'-0"] ∅0.30m

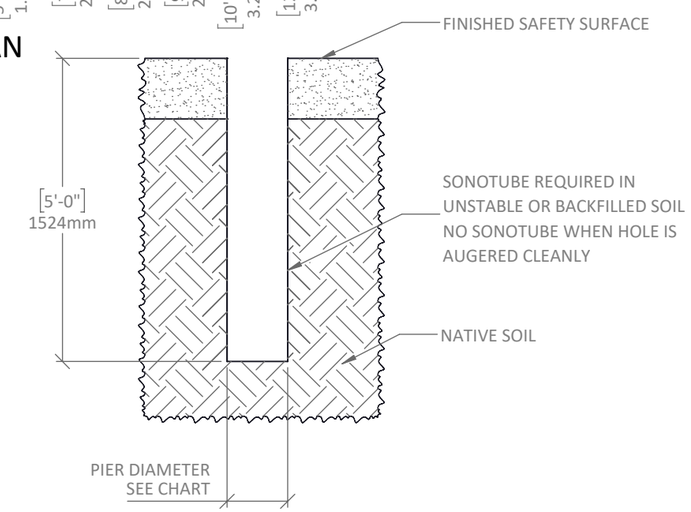

TYPICAL AUGERED PIER

PROPERTY OF EARTHSCAPE PLAY INC. - DO NOT COPY. DO NOT DISTRIBUTE.

SLIDE ENTRANCE

PLASTIC TUBE SLIDE - FLANGE - 12' - TURN RIGHT

STEP 4 - PREP TOWER FOR TUBE SLIDE INSTALL

Temporarily remove tread from wooden step from inside of tower at entrance to slide as shown in Inside View. Save screws

STEP 5 - INSTALL TUBE SLIDE ENTRANCE SECTION

Position the slide entrance section as shown in Slide Entrance Section View and Slide Entrance Elevation View this sheet.

Secure the tube slide entrance section to the steel panel already mounted on the timber tower as per Detail B.

Reinstall tread for wooden step inside the tower.

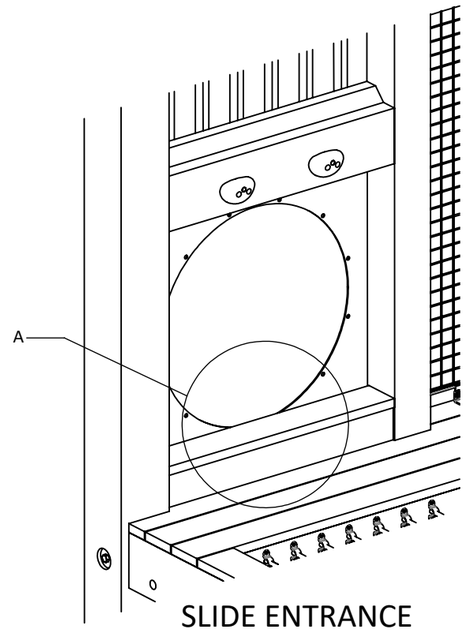

SLIDE ENTRANCE
INSIDE VIEW

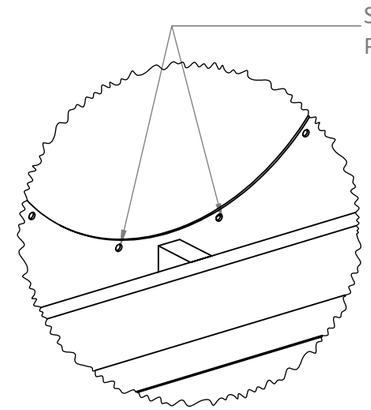

DETAIL A

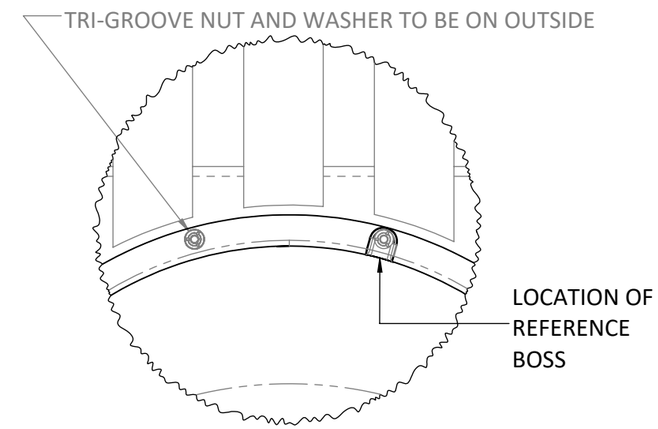

DETAIL B

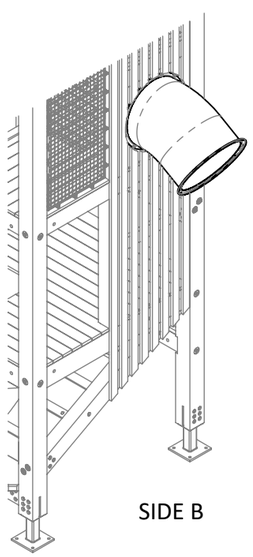

ISOMETRIC VIEW

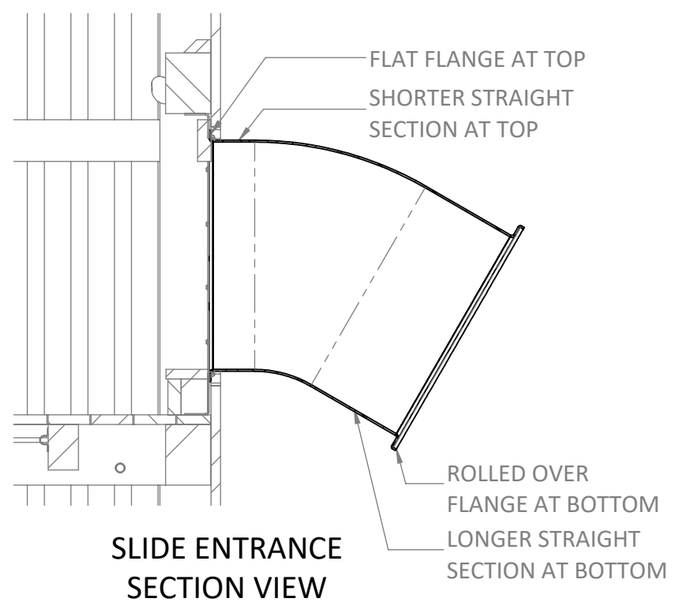

SLIDE ENTRANCE
SECTION VIEW

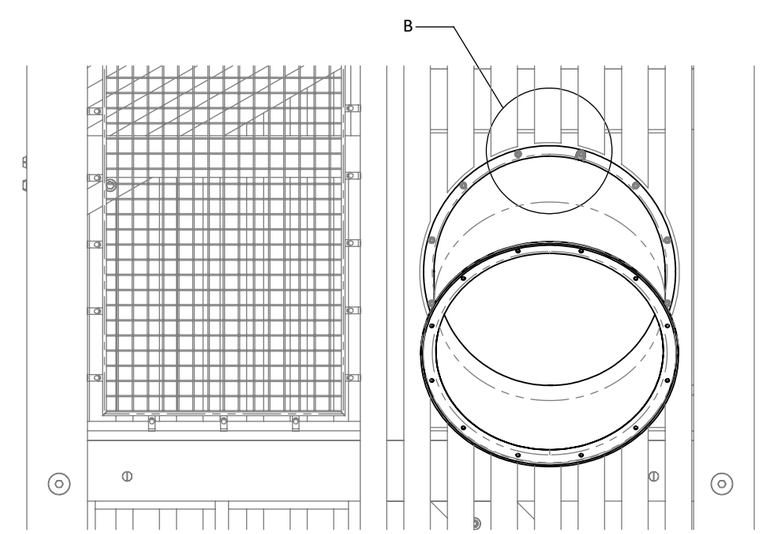

SLIDE ENTRANCE
ELEVATION VIEW

PROPERTY OF EARTHSCAPE PLAY INC. - DO NOT COPY. DO NOT DISTRIBUTE.

ASSEMBLE SLIDE

PLASTIC TUBE SLIDE - FLANGE - 12' - TURN RIGHT

STEP 6 - ASSEMBLE REMAINDER OF TUBE SLIDE

Complete the assembly and installation of the slide in the order noted on the Slide Master Layout this sheet working from the entrance of the slide to the exit.

Tube sections should be rotated so the reference bosses aligns from one section to the next except for slide exit pieces. See slide exit detail next sheet.

Refer to chart on this sheet that matches Earthscape part numbers to the slide manufacturer part numbers and the manufacturer's assembly/installation package numbers. Refer to slide manufacturer's assembly/installation package for more information.

Provide temporary support for the slide as it's being assembled. Once entire slide assembled, support post will be added. See next sheet.

Do not pour concrete piers at this time.

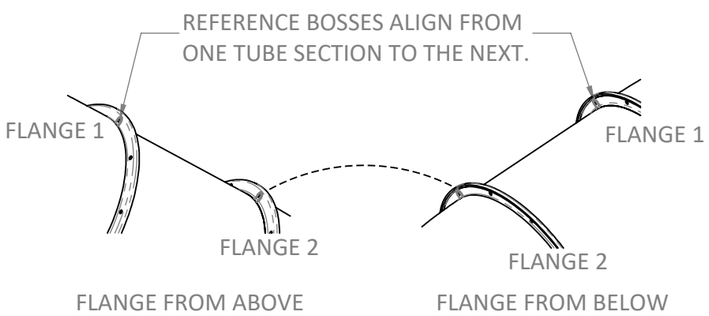

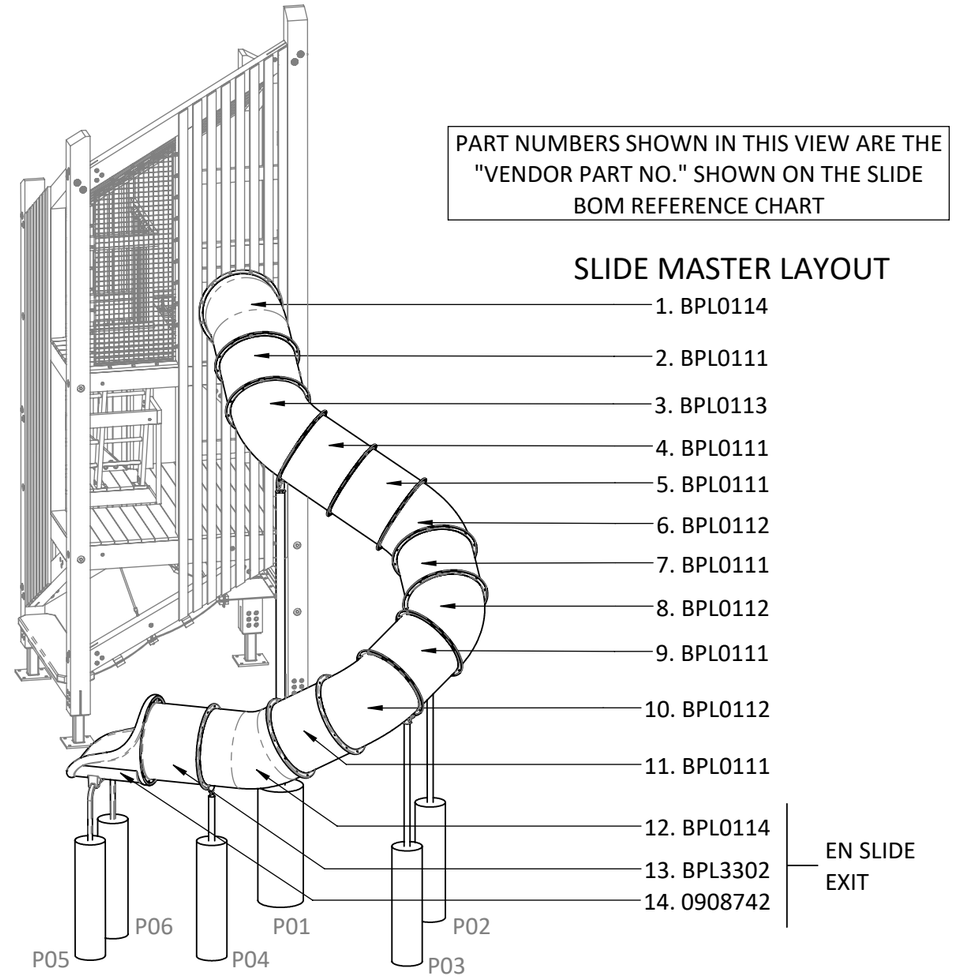

SLIDE BOM REFERENCE CHART				
EARTHSCAPE PART NO.	VENDOR PART NO.	VENDOR ASM NO.	DESCRIPTION	QTY.
SL3001	(2X) BPL0114 + (1X) BPL3302 + (1X) 0908742	ZZYYA846	CUSTOM SLIDE ENTRANCE WITH EN SLIDE EXIT - IN GROUND	1
SL3002	BPL0111	ZZUN3007	30" ROUND STRAIGHT TUBE SECTION	6
SL3004	BPL0113	ZZUN3008	30" ROUND LEFT TUBE SECTION	1
SL3005	BPL0112	ZZUN3009	30" ROUND RIGHT TUBE SECTION	3
SL3000		ZZUN3011	DO NOT CLIMB - SLIDE PANEL	1
SL3007		ZZUN3036	3FT ROUND TUBE SLIDE SUPPORT LEG - IN GROUND	1
SL3010		ZZUN3027	6FT ROUND TUBE SLIDE SUPPORT LEG - IN GROUND	1
SL3013		ZZUN3024	9FT TUBE SLIDE SUPPORT LEG - IN GROUND	1

REFER TO SLIDE MANUFACTURER'S INSTALLATION INSTRUCTIONS WHICH REFERNCE THE VENDOR ASM NO.

PROPERTY OF EARTHSCAPE PLAY INC. - DO NOT COPY. DO NOT DISTRIBUTE.

INSTALL SUPPORT POSTS

PLASTIC TUBE SLIDE - FLANGE - 12' - TURN RIGHT

STEP 6 - INSTALL SUPPORT POSTS

Secure the slide support posts to the slide with the bottom of the posts hanging in the augered holes. Support post installation as per slide manufacturer's details.

Refer to chart on the previous sheet that matches Earthscape part numbers to the slide manufacturer's assembly/installation package numbers.

Finished grade labels on support posts may be wrong. Correct heights noted on this sheet.

Do not pour concrete at this time.

STEP 7 - CHECK POSTS AND ADJUST HEIGHTS

Once all supports posts are hanging from the slide, confirm slide position by checking that all support posts are centered in the augered pier holes. Adjust slide position as needed.

With all support posts attached to the slide, adjust the temporary bracing so the support post heights match the dimensions provided on this sheet.

Slide exit height should be approximately 0.28m - 0.30m [11"-12"] above the finished play surface.

Ensure slide exit is sloped to drain water.

Pour concrete piers.

STEP 8 - REMOVE TEMPORARY SUPPORTS

Once concrete has cured remove the temporary supports.

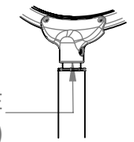

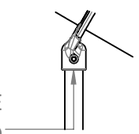

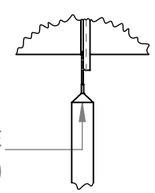

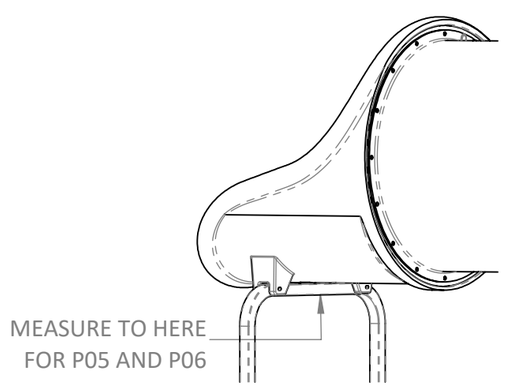

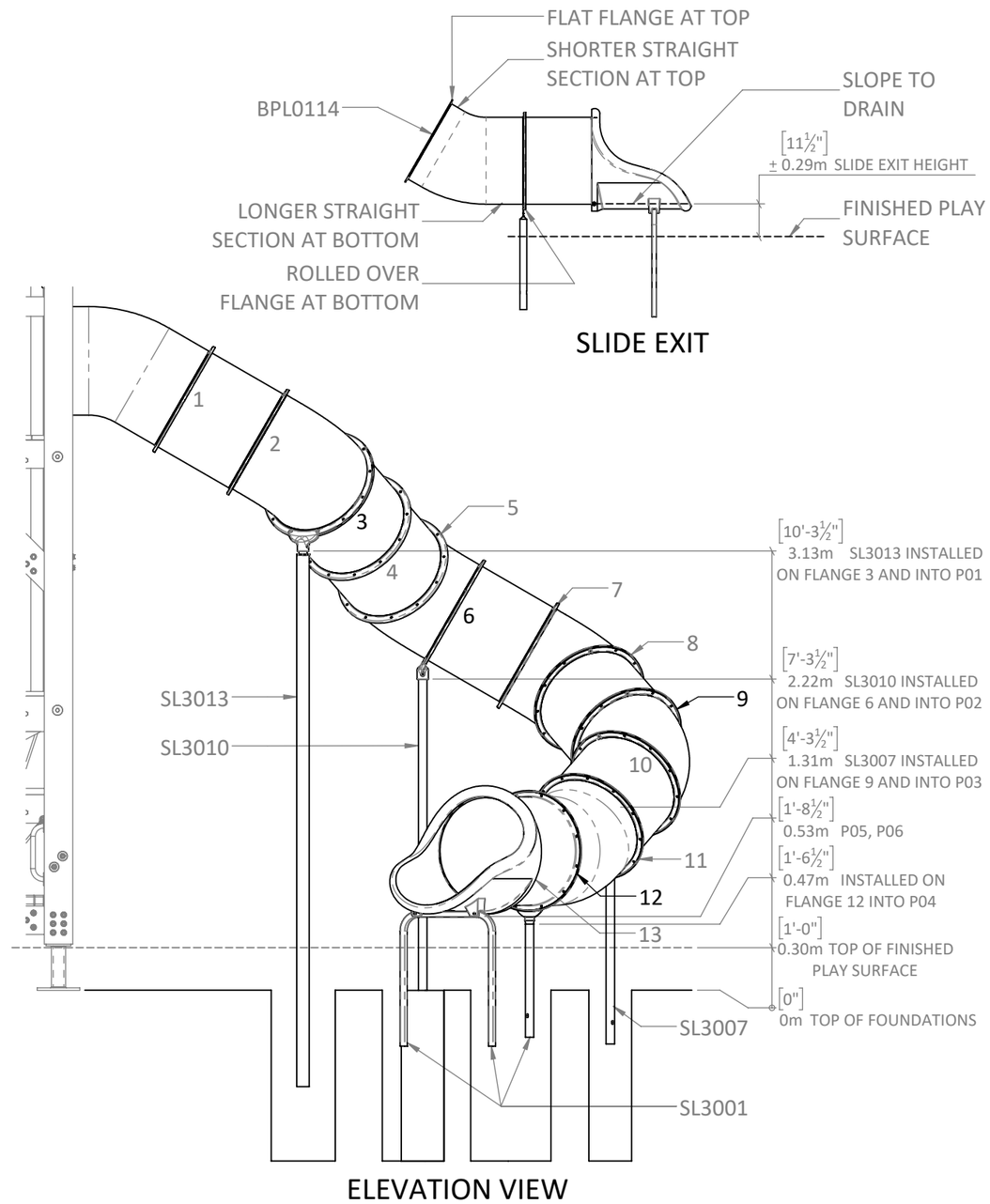

PROPERTY OF EARTHSCAPE PLAY INC. - DO NOT COPY. DO NOT DISTRIBUTE.

INSTALLATION INSTRUCTIONS

EARTHSCAPE COLLECTIONS

WITZEL DYCE
ENGINEERING INC.
PROJECT NO.: 12936-165

LICENSED PROFESSIONAL ENGINEER
M. JOHNSON
100514620
Sep 22, 2025
PROVINCE OF ONTARIO

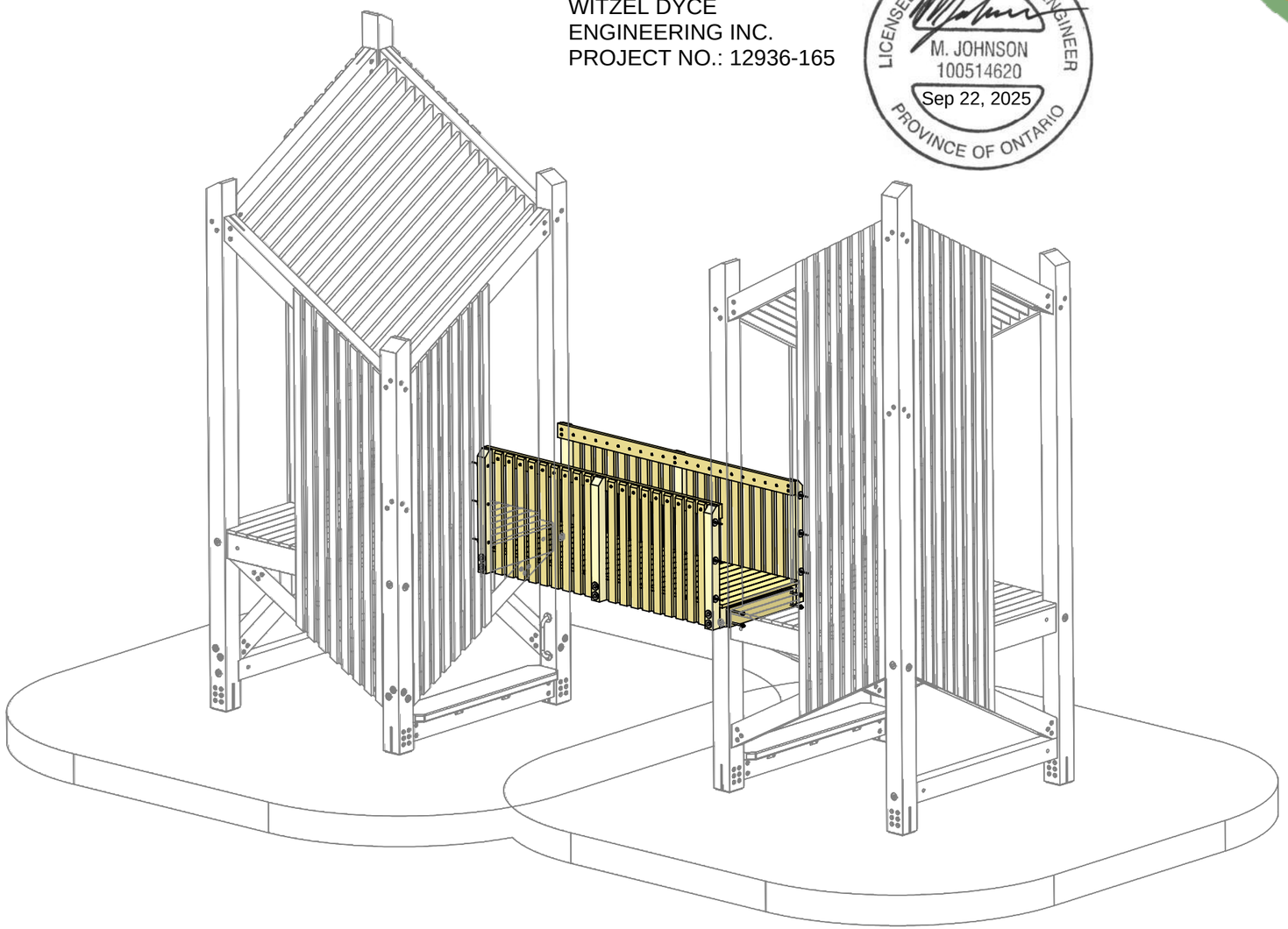

10' WOODEN BRIDGE

THESE INSTRUCTIONS APPLY TO THE FOLLOWING VERSIONS OF THIS PRODUCT:

F00363 - 10' WOODEN BRIDGE

WHICH IS DESIGNED TO BE INSTALLED ON THE FOLLOWING PRODUCTS:

F00182 - 2 LEVEL TIMBER TOWER
F00185 - 1 LEVEL TIMBER TOWER
F00407 - 2 LEVEL TIMBER TOWER
F00408 - 3 LEVEL TIMBER TOWER

NOTE: COLOURS SHOWN ARE REPRESENTATIONAL AND MAY NOT BE THE SAME AS THOSE OF THE SUPPLIED PRODUCT

FOR CSA AND ASTM SPECIFICATIONS AND GENERAL NOTES SEE MAIN STRUCTURE INSTALLATION PACKAGE

DATE DOCUMENT RELEASED 2022-05-30
DOCUMENT NUMBER: 1073001-R1

PROPERTY OF EARTHSCAPE PLAY INC. - DO NOT COPY. DO NOT DISTRIBUTE.

PLEASE READ ALL INSTRUCTIONS

Before starting to install this equipment be sure to read through and understand these instructions.

If you have any questions, contact your local dealer for assistance before proceeding.

MEASUREMENTS AND STANDARDS

Measurements have been provided in both metres and [feet-inches]. Ensure to follow standards noted for the location in which this play equipment is being installed. Those marked CSA are to be used in Canada and those marked ASTM to be used in the United States.

LIST OF ABBREVIATIONS

AYC = Alaskan Yellow Cedar
WRC = Western Red Cedar
DPS = Designated Play Surface
SS = Stainless Steel
HDG = Hot Dipped Galvanized
WWM = Welded Wire Mesh
TYP = Typical
C/W = Complete With
UNO = Unless Noted Otherwise
EWF = Engineered Wood Fiber
PIP = Poured-In-Place Rubber Surfacing
PT = Pressure Treated

TOOLS SUPPLIED WITH THIS PRODUCT

- No tools supplied

TOOLS THE INSTALLER NEEDS TO SUPPLY

- High torque drill
- Set of wood drill bits up to 1/2"
- T25 drive bit
- T40 drive bit
- Circular saw
- Transit or laser Level
- Rigging and lifting straps

EQUIPMENT THE INSTALLER NEEDS TO SUPPLY

- Machine to lift and position 300 kg [670 lb] pre-assembled wooden bridge.

INSTALLER CREW AND TIME REQUIRED

Number of people needed: 3
Typical total person-hours to install: 3

Time breakdown:
- 1 hours x 3 people to position and anchor the bridge in place

MATERIALS THE INSTALLER NEEDS TO SUPPLY

- No additional materails required

WARNINGS

These instructions do not provide specific guidance on the use of tools or the lifting and moving heavy objects. It is assumed that competent people are installing this product who are familiar with using the tools and equipment required and are knowledgeable and skilled at lifting and positioning heavy objects.

PROPERTY OF EARTHSCAPE PLAY INC. - DO NOT COPY. DO NOT DISTRIBUTE.

MAKE SURE YOU HAVE ALL THE PARTS

Examine the equipment and ensure you have all the required parts listed in the table below.

PART IMAGE	ITEM NO.	PART NO.	DESCRIPTION	QTY.
	1	H16687	ASSY SK A2 8mm X 200mm SS	12
	2	H16685	ASSY SK A2 8mm X 100mm SS	8
SEE IMAGE THIS SHEET	3	F00363	PRE-ASSEMBLED WOODEN BRIDGE 10'	1

IMAGES OF FASTENERS IN THIS TABLE ARE REPRESENTATIONAL TO HELP IDENTIFY PARTS.

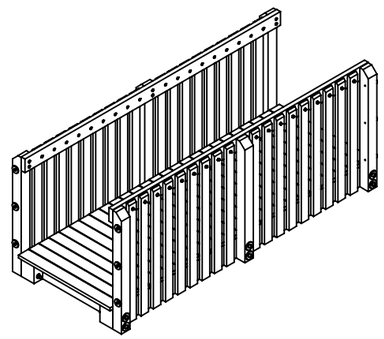

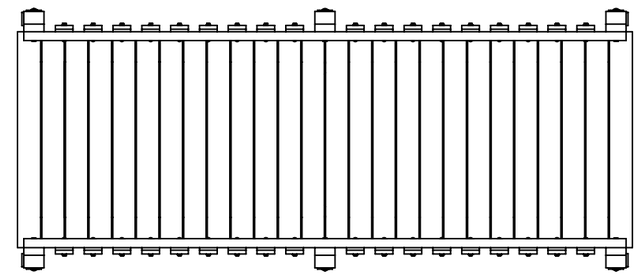

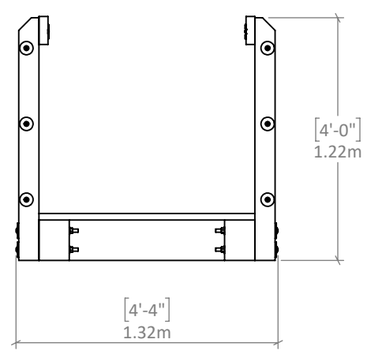

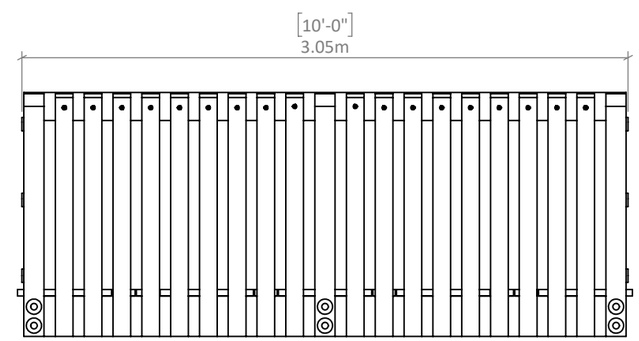

TIMBER BRIDGE SHIPPED PRE-ASSEMBLED AS SHOWN

PROPERTY OF EARTHSCAPE PLAY INC. - DO NOT COPY. DO NOT DISTRIBUTE.

STEP 1 - CONFIRM WHERE THE ACCESSORY IS TO BE INSTALLED

Review the complete tower installation package to determine on which side this accessory is to be installed and what the finished product should look like. The images shown on this page are representational and may not match your exact installation.

STEP 2 - INSTALL BRIDGE PRIOR TO ANCHORING TOWERS TO FOUNDATION PAD.

It might be necessary to make minor adjustments the position of the timber towers to suit the as-built bridge. Anchors towers after bridge has been installed.

STEP 3 - PREP BRIDGE AND CONFIRM GAP BETWEEN TOWERS IS SLIGHTLY LARGER THEN THE BRIDGE IS LONG.

Temporarily remove the end deckboard from both ends of bridge as per Figure 1. Make sure to note which end they came from and their orientation.

Measure distance between towers and compare to supplied bridge length. Pull towers away from each other enough to be able to fit bridge between.

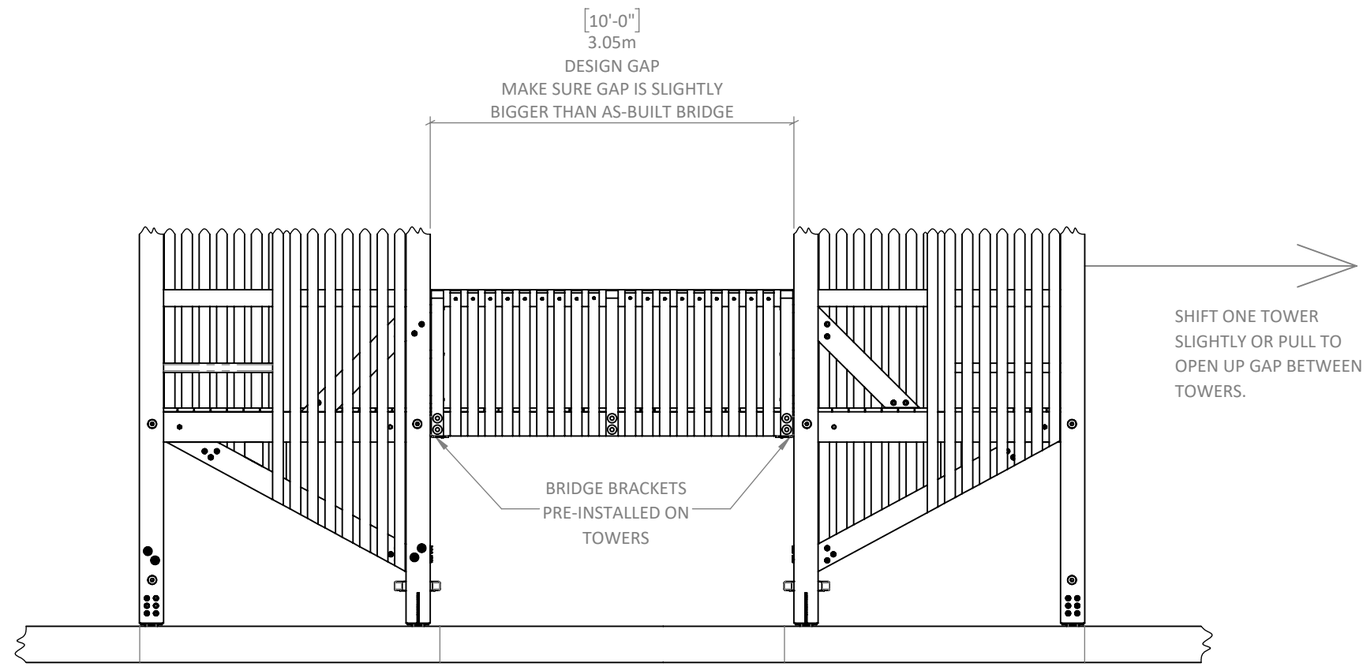

SAMPLE ELEVATION

(ACTUAL INSTALLATION MIGHT DIFFER FROM THIS VIEW. CHECK MAIN INSTALLTION PACKAGE TO SEE PORJECT SPECIFIC ARRANGMENT OF BRIDGE AND TOWERS

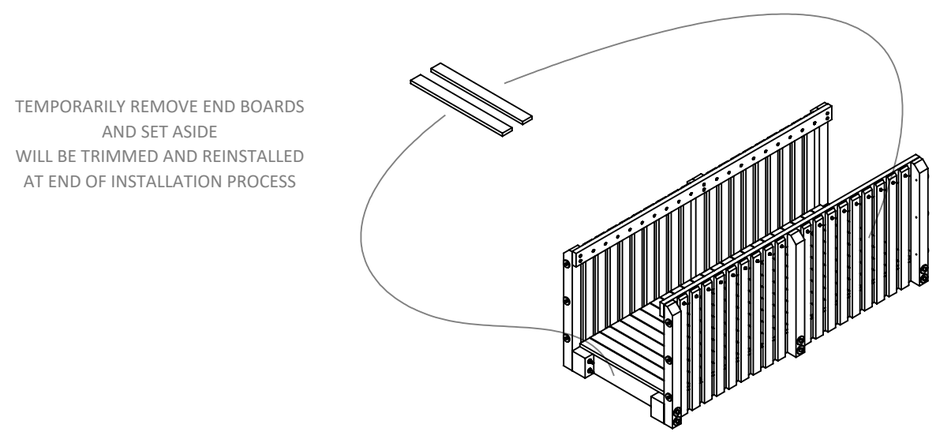

FIGURE 1

PROPERTY OF EARTHSCAPE PLAY INC. - DO NOT COPY. DO NOT DISTRIBUTE.

BRIDGE INSTALLATION 2 OF 3

10' WOODEN BRIDGE

STEP 4 - LIFT AND PLACE BRIDGE

Lift bridge with apporpriate equipment and move into position.
Lower bridge on to the 2 brackets pre-installed on the timber towers ensuring the bridge is centered in the tower opening.

STEP 5 - ADJUST POSITION OF TOWERS

Draw towers together so they are tight to the ends of the bridge.
Make minor adjustments to tower position to ensure both ends of bridge are centered in tower opening and that towers are tight to the end of the bridge.

STEP 6 - SECURE BRIDGE GUARDRAIL POSTS

Install screws through pre-dilled holes in end guardrail posts into timber tower posts.

Pre-drill all screw holes as per general notes.

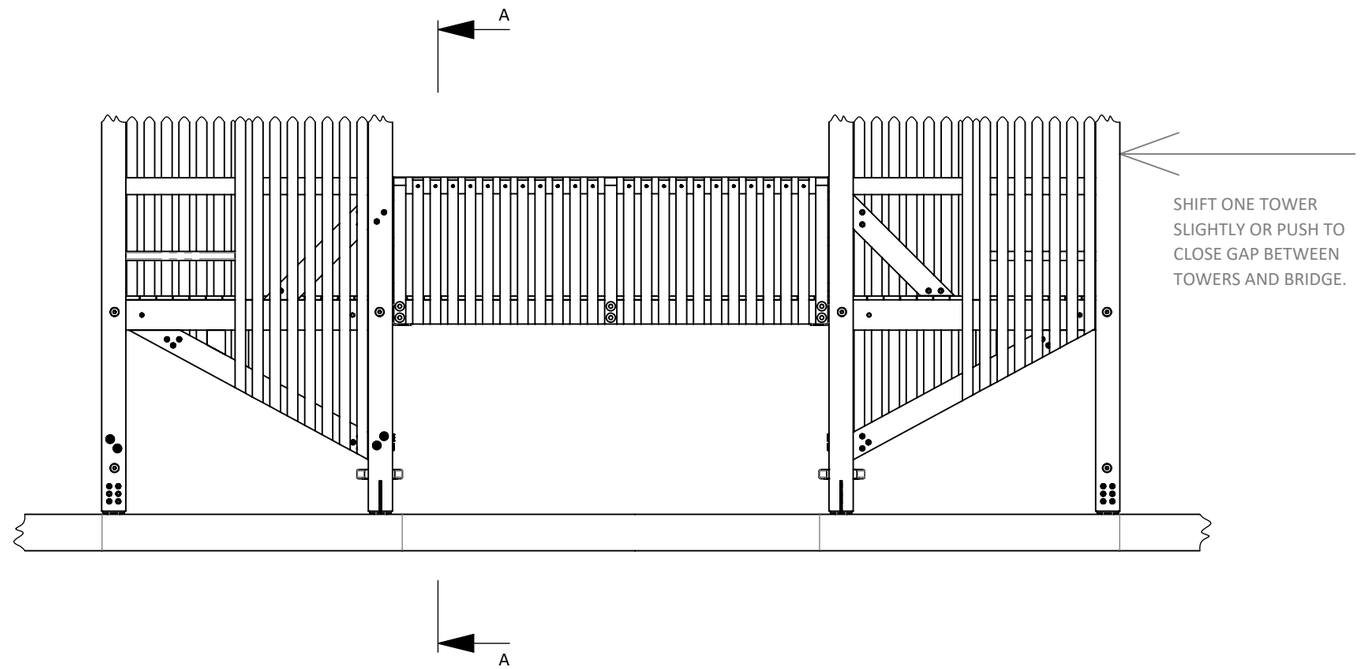

SAMPLE ELEVATION

(ACTUAL INSTALLATION MIGHT DIFFER FROM THIS VIEW. CHECK MAIN INSTALLTION PACKAGE TO SEE PORJECT SPECIFIC ARRANGMENT OF BRIDGE AND TOWERS

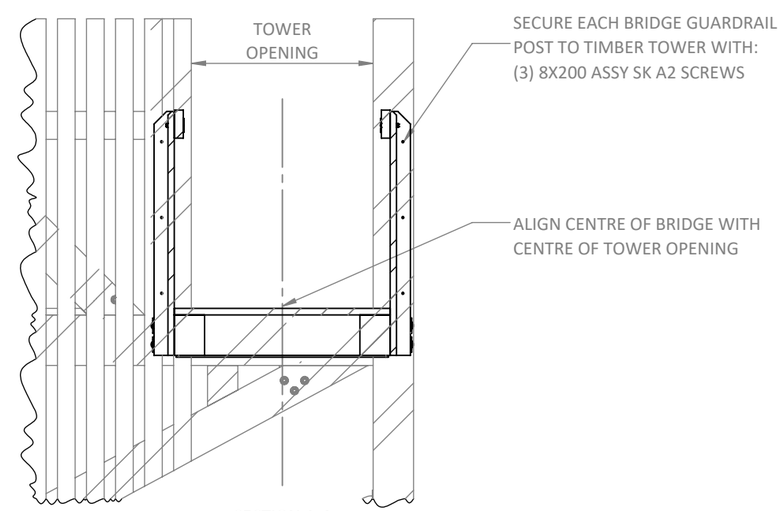

SECTION A-A

PROPERTY OF EARTHSCAPE PLAY INC. - DO NOT COPY. DO NOT DISTRIBUTE.

STEP 7 - SECURE BRIDGE STRINGERS

Install screws through bottom of steel brackets into underside of bridge timber stringers.

Pre-drill all screw holes as per general notes.

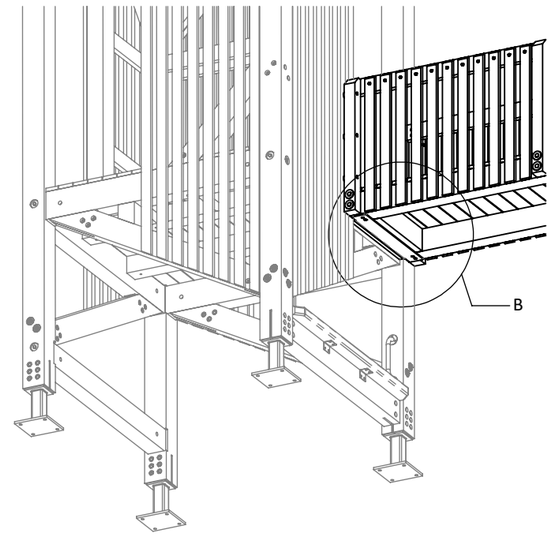

LOOKING UNDER BRIDGE

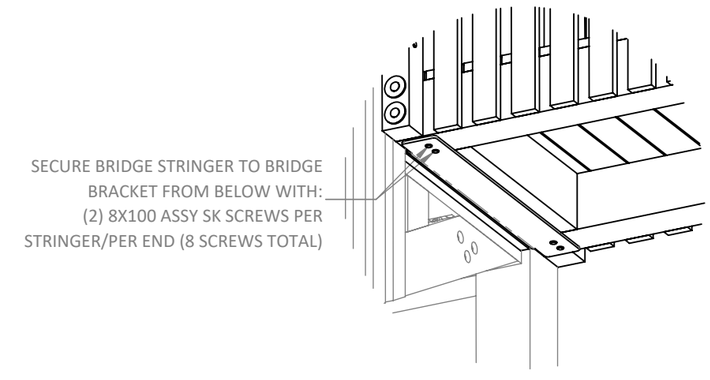

DETAIL B

STEP 8 - REINSTALL DECKBOARDS

Trim the removed deckboards to suit the gap in decking between the bridge and tower.

Ensure a +/-6mm (1/4") gap between deckboards as per Figure 2. Deckboards must not touch. Reinstall with the original screws.

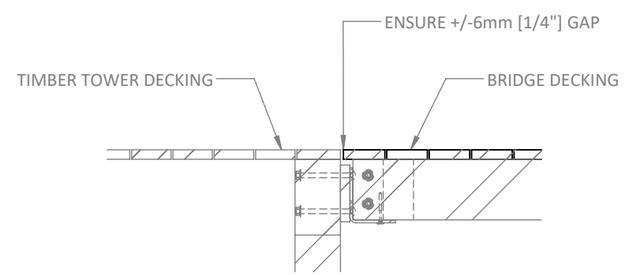

FIGURE 2

PROPERTY OF EARTHSCAPE PLAY INC. - DO NOT COPY. DO NOT DISTRIBUTE.

INSTALLATION INSTRUCTIONS

EARTHSCAPE COLLECTIONS

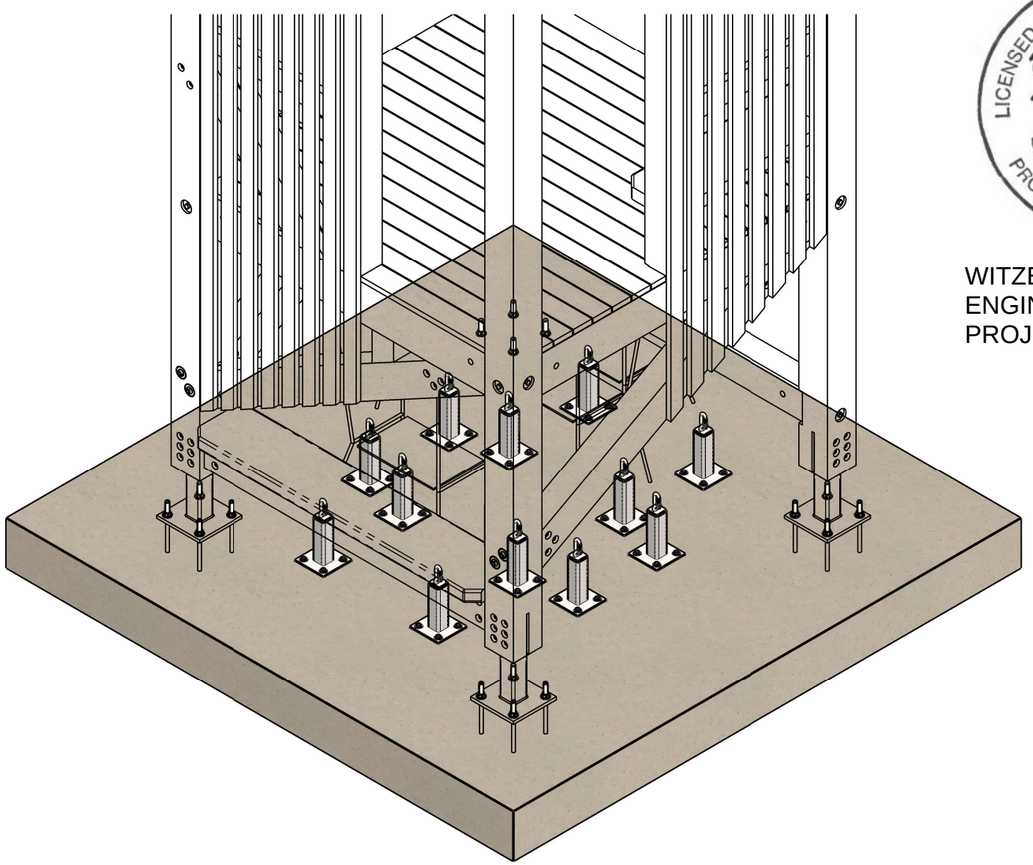

WITZEL DYCE
ENGINEERING INC.
PROJECT NO.: 12936-165

SLING SEATS - PIP

THESE INSTRUCTIONS APPLY TO THE FOLLOWING VERSIONS OF THIS PRODUCT:

F00403 - SLING SEATS - PIP

NOTE: COLOURS SHOWN ARE REPRESENTATIONAL AND MAY NOT BE THE SAME AS THOSE OF THE SUPPLIED PRODUCT

DATE DOCUMENT RELEASED 2022-06-05
DOCUMENT NUMBER: 1073938-R1

PROPERTY OF EARTHSCAPE PLAY INC. - DO NOT COPY. DO NOT DISTRIBUTE.

PLEASE READ ALL INSTRUCTIONS

Before starting to install this equipment be sure to read through and understand these instructions.

If you have any questions, contact your local dealer for assistance before proceeding.

MEASUREMENTS AND STANDARDS

Measurements have been provided in both metres and [feet-inches]. Ensure to follow standards noted for the location in which this play equipment is being installed. Those marked CSA are to be used in Canada and those marked ASTM to be used in the United States.

LIST OF ABBREVIATIONS

AYC = Alaskan Yellow Cedar
WRC = Western Red Cedar
DPS = Designated Play Surface
SS = Stainless Steel
HDG = Hot Dipped Galvanized
WWM = Welded Wire Mesh
TYP = Typical
C/W = Complete With
UNO = Unless Noted Otherwise
EWF = Engineered Wood Fiber
PIP = Poured-In-Place Rubber Surfacing
PT = Pressure Treated

TOOLS SUPPLIED WITH THIS PRODUCT

- No tools supplied

TOOLS THE INSTALLER NEEDS TO SUPPLY

- High torque drill
- 1/2" impact driver
- Set of socket - up to 3/4"
- Hammer drill
- Concrete drill bit, 1/2" x 8"
- Transit or Laser Level
- Rigging and lifting straps

EQUIPMENT THE INSTALLER NEEDS TO SUPPLY

- None

INSTALLER CREW AND TIME REQUIRED

Number of people needed: 2
Typical total person-hours to install: 4 hours
Time breakdown:

- 2 hours x 2 people for onsite fabrication and play equipment installation

MATERIALS THE INSTALLER NEEDS TO SUPPLY

- Threadmate threadlocker Vibra-Tite VC-3 (or equal)

WARNINGS

These instructions do not provide specific guidance on the use of tools or the lifting and moving heavy objects. It is assumed that competent people are installing this product who are familiar with using the tools and equipment required and are knowledgeable and skilled at lifting and positioning heavy objects.

PROPERTY OF EARTHSCAPE PLAY INC. - DO NOT COPY. DO NOT DISTRIBUTE.

MAKE SURE YOU HAVE ALL THE PARTS

Examine the equipment and ensure you have all the required parts listed in the table below.

PART IMAGE	ITEM NO.	PART NO.	DESCRIPTION	QTY.
SEE IMAGE THIS SHEET	1	B00022	CLIMBING NET ATTACHMENT POST - SURFACE MOUNT	12
	2	H30020	WASHER 1/2" X 1-3/8" SS	48
NO IMAGE PROVIDED	3	H60001	WELDED CHAIN 316 SS 0.375IN X 36IN LONG	12
	4	H60018	QUICK LINK 3/8" SS 316	12
	5	H60020	TITEN HD 1/2" X 5" CONCRETE SCREW	48

IMAGES OF FASTENERS IN THIS TABLE ARE REPRESENTATIONAL TO HELP IDENTIFY PARTS.

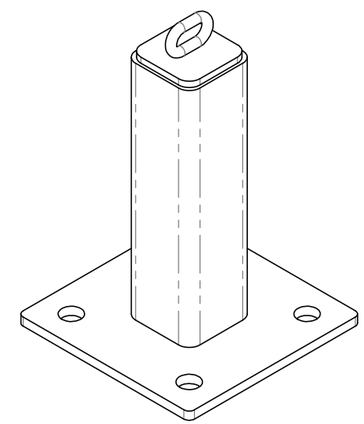

B00022 - CLIMBING NET ATTACHMENT POST

PROPERTY OF EARTHSCAPE PLAY INC. - DO NOT COPY. DO NOT DISTRIBUTE.

LOCATE PLAY EQUIPMENT

SLING SEATS - PIP

STEP 1 - LOCATING THE EQUIPMENT ON SITE

Layout the edges of the 12 Net Attachment Posts relative to the 1 level tower corner post base bracekts. Ensure you reference the correct side of the tower.

STEP 2 - SECURE BRACKETS TO CONCRETE FOUNDATION

Secure the bottom of the sling seat ropes (pre-installed on 1 level tower) to the Climbing Net Attachment Post as per Detail A this sheet.

Include 3/8" chain and quicklink as noted. Adjust length of chain as needed. Cut and dispose of excess.

STEP 3 - PIP SURFACING

Layout and installation of PIP surfacing is beyond the scope of these instructions, however, please refere to Typical PIP Surface Detail this sheet to see the intended cross section of the play surface relative to the Net Attachment Post bracket.

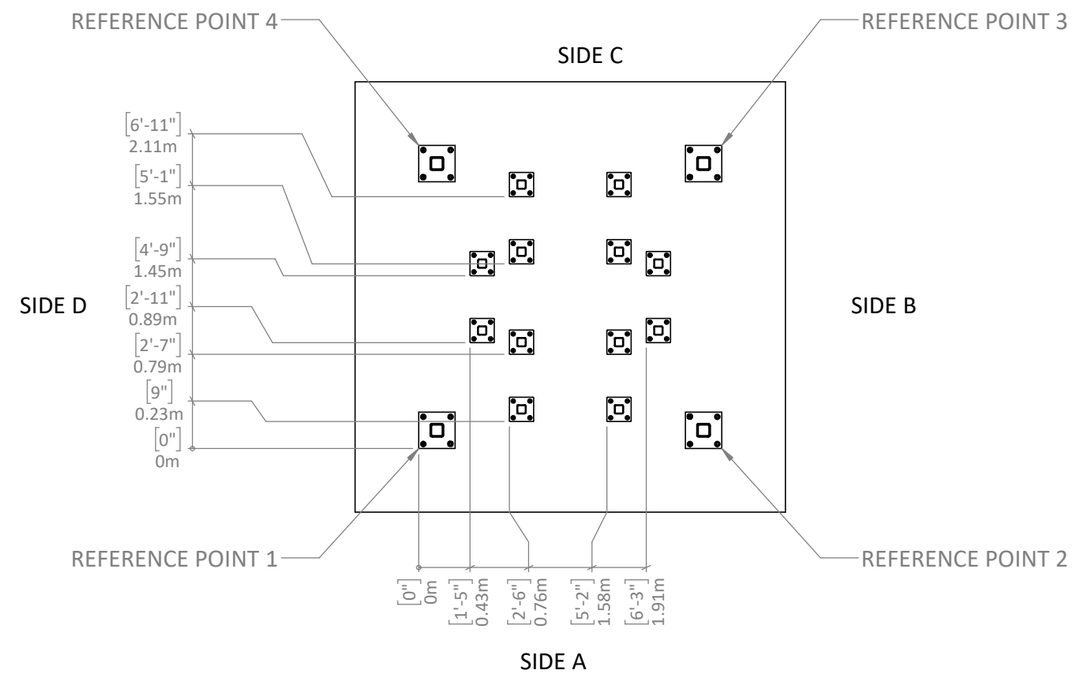

NET ATTACHMENT POST LAYOUT

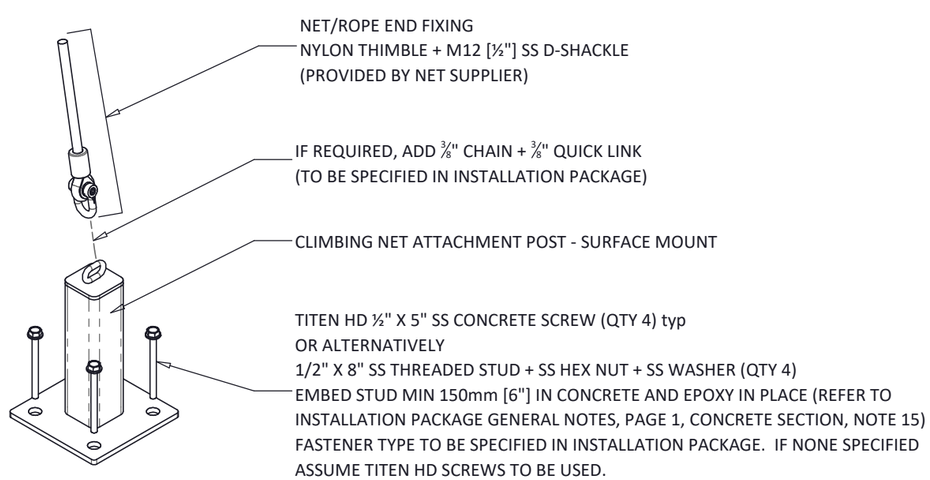

DETAIL A

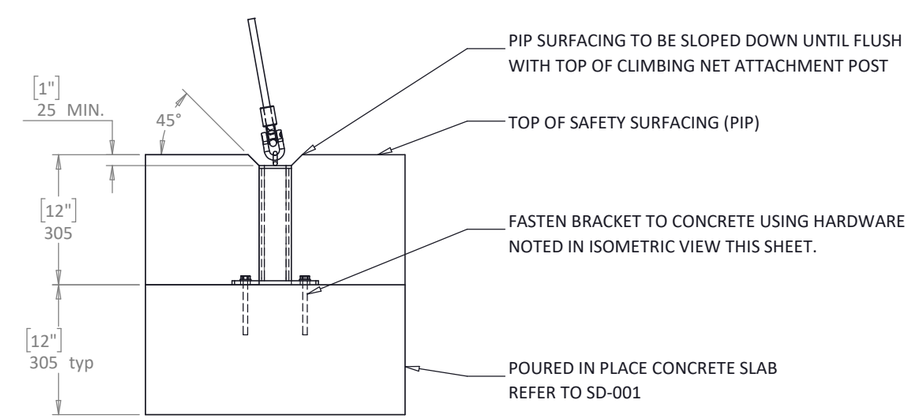

TYPICAL PIP SURFACING DETAIL

PROPERTY OF EARTHSCAPE PLAY INC. - DO NOT COPY. DO NOT DISTRIBUTE.

INSTALLATION INSTRUCTIONS

EARTHSCAPE COLLECTIONS

WITZEL DYCE
ENGINEERING INC.
PROJECT NO.: 12936-165

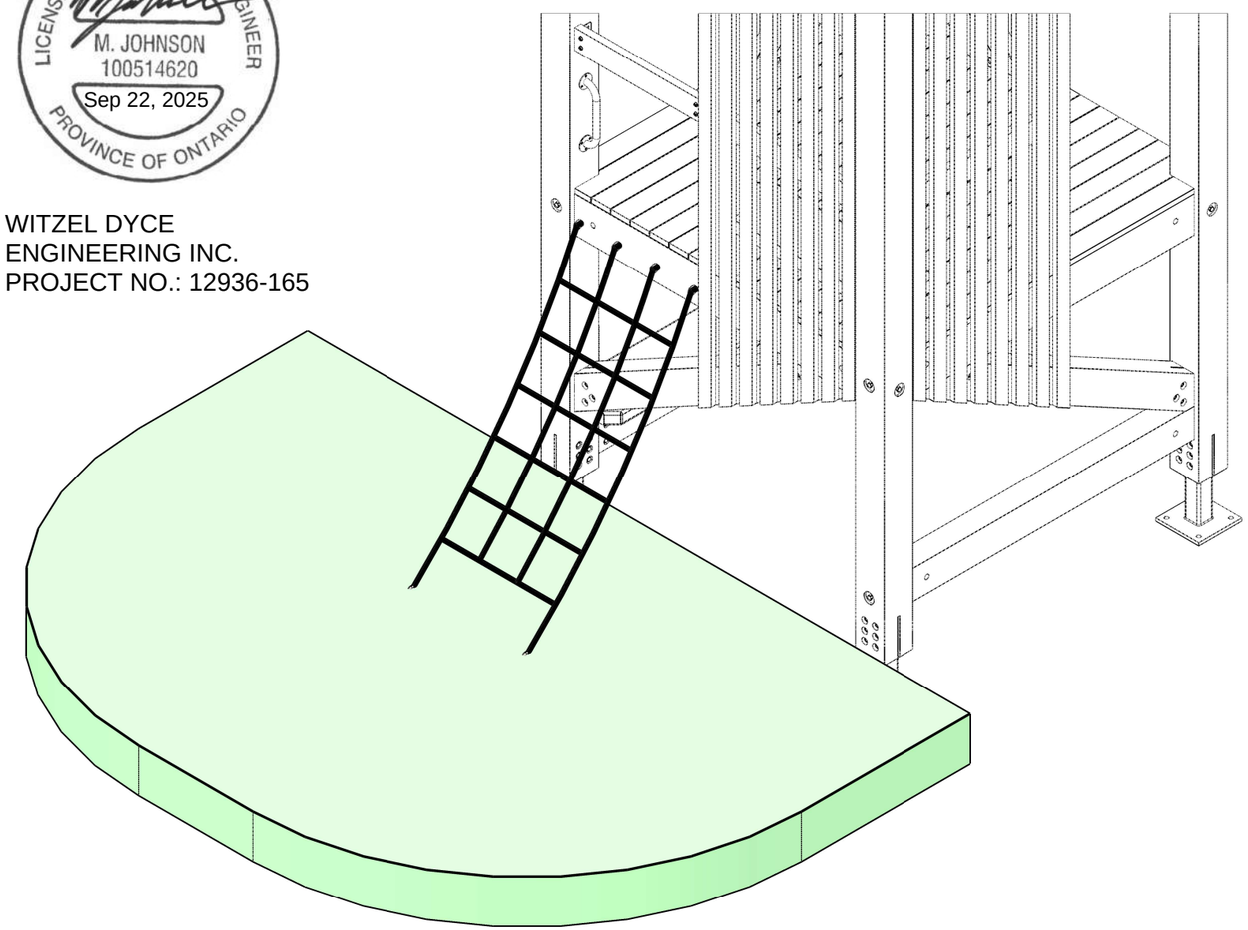

SAMPLE ISOMETRIC
(MAY NOT MATCH PROJECT SPECIFIC LOCATION OF SUB-ASSEMBLY)

ACCESS CLIMBING NET - PIP

THESE INSTRUCTIONS APPLY TO THE FOLLOWING VERSIONS OF THIS PRODUCT:

F00405 - ACCESS CLIMBING NET - PIP

WHICH IS DESIGNED TO BE INSTALLED ON THE FOLLOWING PRODUCTS:

F00185 - 1 LEVEL TIMBER TOWER
F00407 - 2 LEVEL TIMBER TOWER
F00408 - 3 LEVEL TIMBER TOWER

NOTE: COLOURS SHOWN ARE REPRESENTATIONAL AND MAY NOT BE THE SAME AS THOSE OF THE SUPPLIED PRODUCT

FOR CSA AND ASTM SPECIFICATIONS AND GENERAL NOTES SEE MAIN STRUCTURE INSTALLATION PACKAGE

DATE DOCUMENT RELEASED 2022-06-05
DOCUMENT NUMBER: 1073937-R1

PROPERTY OF EARTHSCAPE PLAY INC. - DO NOT COPY. DO NOT DISTRIBUTE.

PLEASE READ ALL INSTRUCTIONS

Before starting to install this equipment be sure to read through and understand these instructions.

If you have any questions, contact your local dealer for assistance before proceeding.

MEASUREMENTS AND STANDARDS

Measurements have been provided in both millimeters and [feet-inches]. Ensure to follow standards noted for the location in which this play equipment is being installed. Those marked CSA are to be used in Canada and those marked ASTM to be used in the United States.

LIST OF ABBREVIATIONS

AYC = Alaskan Yellow Cedar
WRC = Western Red Cedar
DPS = Designated Play Surface
SS = Stainless Steel
HDG = Hot Dipped Galvanized
WWM = Welded Wire Mesh
TYP = Typical
C/W = Complete With
UNO = Unless Noted Otherwise
EWF = Engineered Wood Fiber
PIP = Poured-In-Place Rubber Surfacing
PT = Pressure Treated

TOOLS SUPPLIED WITH THIS PRODUCT

- None supplied

TOOLS THE INSTALLER NEEDS TO SUPPLY

- Hammer drill
- Set of concrete drill bits - diameter and length as needed to install concrete screws
- High torque drill
- 1/2" ratcheting socket wrench
- Socket set up to 3/4"

EQUIPMENT THE INSTALLER NEEDS TO SUPPLY

- None

INSTALLER CREW AND TIME REQUIRED

Number of people needed: 2
Typical total person-hours to install: 2

Time breakdown:
- 1 hour x 2 person for onsite fabrication and play equipment installation

MATERIALS THE INSTALLER NEEDS TO SUPPLY

- Threadmate threadlocker Vibra-Tite VC-3 (or equal)

WARNINGS

These instructions do not provide specific guidance on the use of tools or the lifting and moving heavy objects. It is assumed that competent people are installing this product who are familiar with using the tools and equipment required and are knowledgeable and skilled at lifting and positioning heavy objects.

PROPERTY OF EARTHSCAPE PLAY INC. - DO NOT COPY. DO NOT DISTRIBUTE.

MAKE SURE YOU HAVE ALL THE PARTS

Examine the equipment and ensure you have all the required parts listed in the table below.

Access net comes pre-installed on tower.

PART IMAGE	ITEM NO.	PART NO.	DESCRIPTION	QTY.
SEE IMAGE THIS SHEET	1	B00022	CLIMBING NET ATTACHMENT POST - SURFACE MOUNT	2
	2	H30020	WASHER 1/2" X 1-3/8" SS	8
	3	H60020	TITEN HD 1/2" X 5" CONCRETE SCREW	8

IMAGES OF FASTENERS IN THIS TABLE ARE REPRESENTATIONAL TO HELP IDENTIFY PARTS.

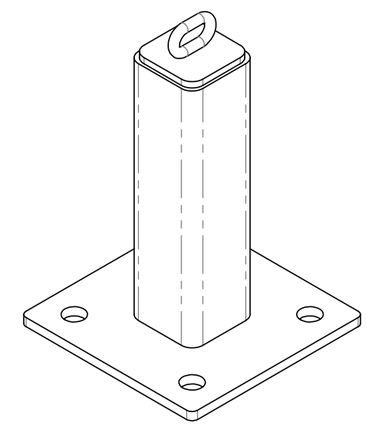

B00022 - CLIMBING NET ATTACHMENT POST

PROPERTY OF EARTHSCAPE PLAY INC. - DO NOT COPY. DO NOT DISTRIBUTE.

FINISHED PRODUCT

ACCESS CLIMBING NET - PIP

WHAT THE FINISHED PRODUCT LOOKS LIKE

Finished play surface and concrete foundations by Installer.

Foundation layout and details not shown in this package. Please review the main tower installation package for this information.

Views on this sheet may not match project specific location of the add-on accessory. It could be on a different side of the tower.
Review main tower installation package to see the position of this add-on for your specific project.

Layout and installation of PIP surfacing is beyond the scope of these instructions, however, please refere to Typical PIP Surface Detail this sheet to see the intended cross section of the play surface relative to the Net Attachment Post bracket.

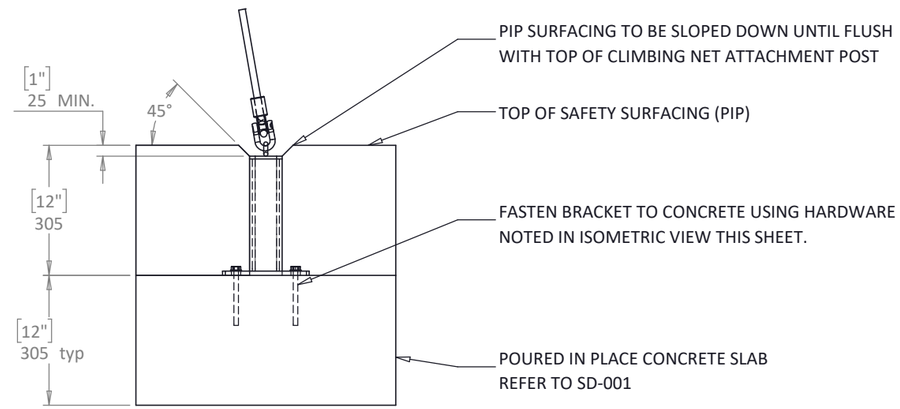

TYPICAL PIP SURFACE DETAIL

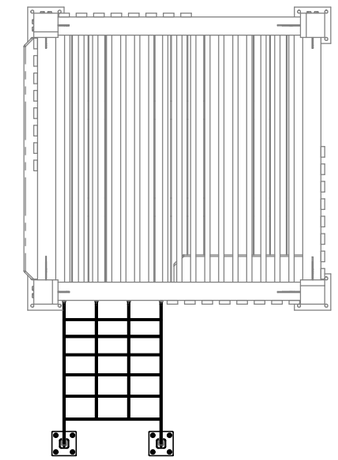

PLAN VIEW

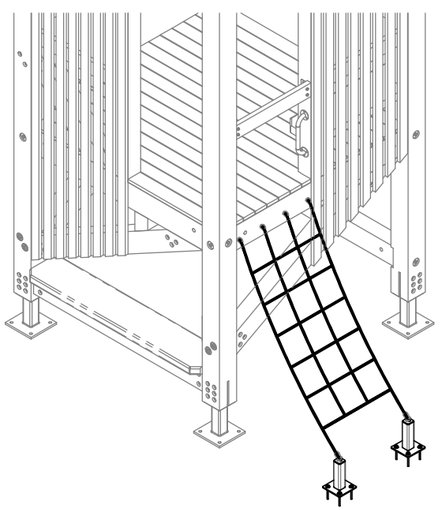

ISOMETRIC VIEW

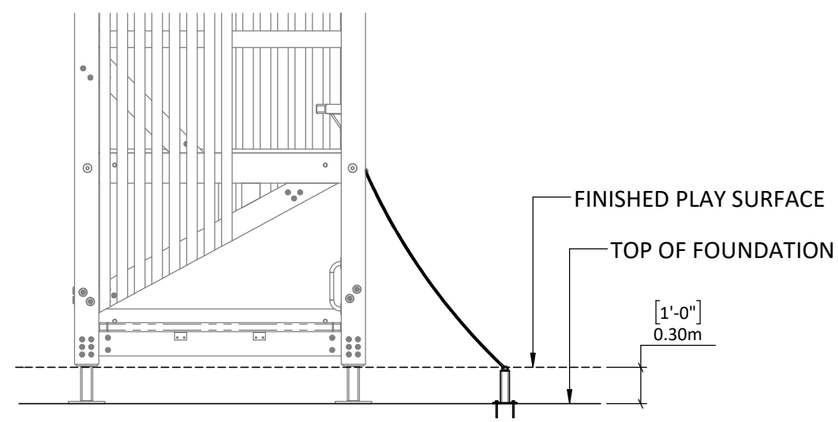

SIDE VIEW

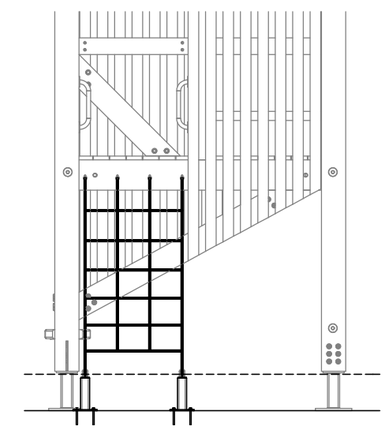

FRONT VIEW

PROPERTY OF EARTHSCAPE PLAY INC. - DO NOT COPY. DO NOT DISTRIBUTE.

LOCATE PLAY EQUIPMENT

ACCESS CLIMBING NET - PIP

STEP 1 - NET FOUNDATION

The concrete foundation needed for this add-on is illustrated in the main tower installation package and can vary from project to project. See main tower installation package for more information.

STEP 2 - PREPARE NET

Top end of net is pre-installed on tower. Unpack the net so it is hanging from the tower.

STEP 3 - LAYOUT CLIMBING NET ATTACHEMENT POSTS

Layout the position of the Climbing Net Attachment Post brackets as per the main tower installation package.

STEP 4 - CONNECT NET TO TOP OF POSTS

Connect the bottom end of the climbing net to the Attachement Posts as per Detail A this sheet.

STEP 5 - ADJUST ATTACHMENT POST POSITION AND SECURE TO CONCRETE PAD

Position the Attachement Posts to align with the layout marks and then check the tension in the net as noted in the Sample Elevation View this sheet.

If there is not enough sag, shift the attachment posts towards or away from the tower as needed until the correct sag is achiaved.

Secure the Attachment Posts to the pad with concrete screws as noted in Detail A this sheet.

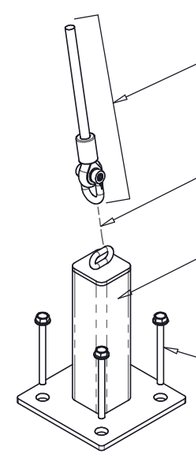

NET/ROPE END FIXING
NYLON THIMBLE + M12 [½"] SS D-SHACKLE
(PROVIDED BY NET SUPPLIER)

IF REQUIRED, ADD ⅜" CHAIN + ⅜" QUICK LINK
(TO BE SPECIFIED IN INSTALLATION PACKAGE)

CLIMBING NET ATTACHMENT POST - SURFACE MOUNT

TITEN HD ½" X 5" SS CONCRETE SCREW (QTY 4) typ
OR ALTERNATIVELY
1/2" X 8" SS THREADED STUD + SS HEX NUT + SS WASHER (QTY 4)
EMBED STUD MIN 150mm [6"] IN CONCRETE AND EPOXY IN PLACE (REFER TO INSTALLATION PACKAGE GENERAL NOTES, PAGE 1, CONCRETE SECTION, NOTE 15)
FASTENER TYPE TO BE SPECIFIED IN INSTALLATION PACKAGE. IF NONE SPECIFIED ASSUME TITEN HD SCREWS TO BE USED.

DETAIL A

APPLY THREADLOCK TO SECURE ALL SCREW CONNECTIONS

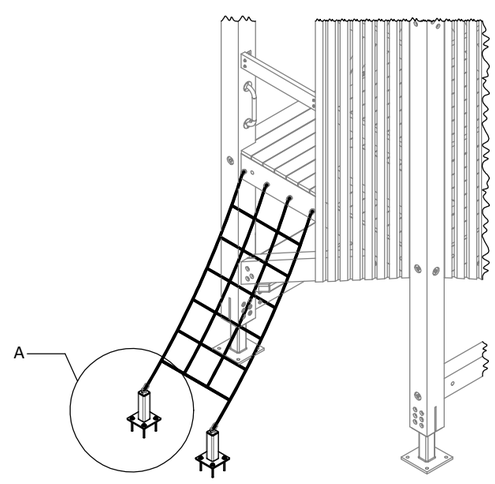

SAMPLE ISOMETRIC
(MAY NOT MATCH PROJECT SPECIFIC LOCATION OF SUB-ASSEMBLY)

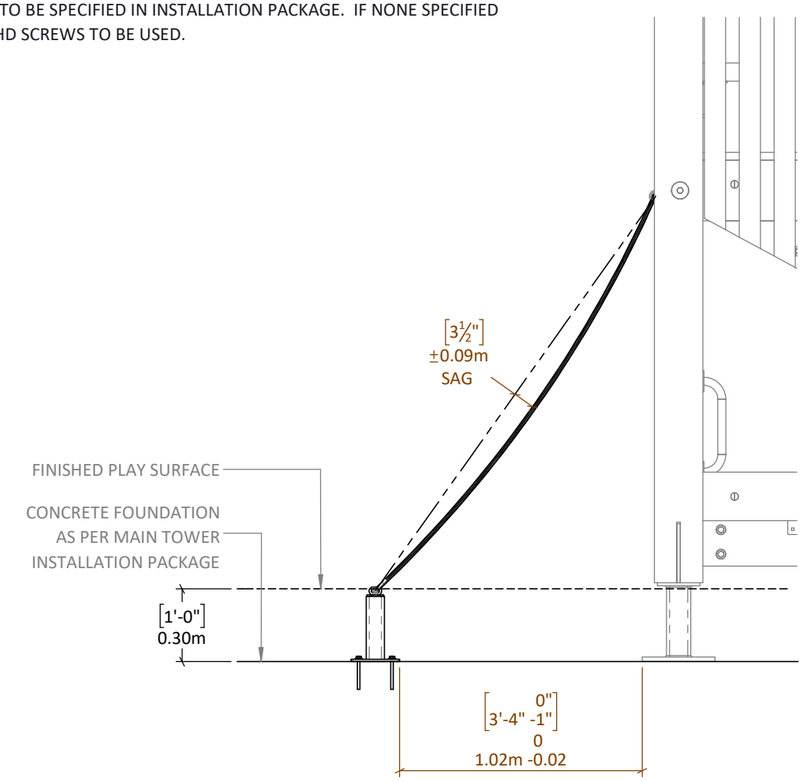

SAMPLE ELEVATION VIEW

Map of Targeted Areas and Species for Plant Management
Hurld Park Climate Resiliency Hub
Woburn, MA
March 2024

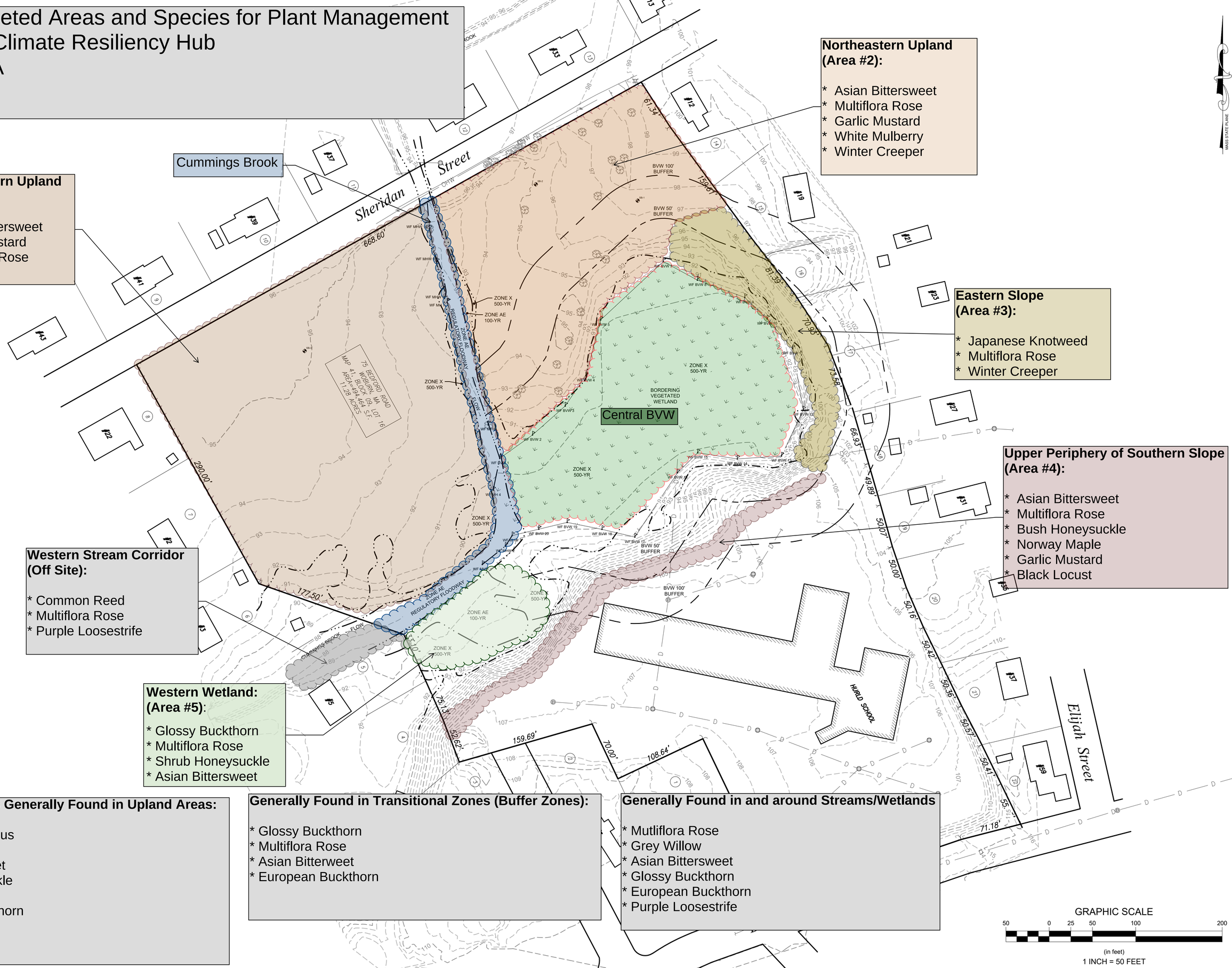

Northeastern Upland (Area #2):

* Asian Bittersweet
* Multiflora Rose
* Garlic Mustard
* White Mulberry
* Winter Creeper

Northwestern Upland (Area #1):

* Asian Bittersweet
* Garlic Mustard
* Multiflora Rose

Eastern Slope (Area #3):

* Japanese Knotweed
* Multiflora Rose
* Winter Creeper

Upper Periphery of Southern Slope (Area #4):

* Asian Bittersweet
* Multiflora Rose
* Bush Honeysuckle
* Norway Maple
* Garlic Mustard
* Black Locust

Western Stream Corridor (Off Site):

* Common Reed
* Multiflora Rose
* Purple Loosestrife

Western Wetland: (Area #5):

* Glossy Buckthorn
* Multiflora Rose
* Shrub Honeysuckle
* Asian Bittersweet

Invasive Species Generally Found in Upland Areas:

* Winged Euonymus
* Multiflora Rose
* Asian Bittersweet
* Bush Honeysuckle
* Garlic Mustard
* European Buckthorn
* Norway Maple
* Tree of Heaven

Generally Found in Transitional Zones (Buffer Zones):

* Glossy Buckthorn
* Multiflora Rose
* Asian Bitterweet
* European Buckthorn

Generally Found in and around Streams/Wetlands

* Mutliflora Rose
* Grey Willow
* Asian Bittersweet
* Glossy Buckthorn
* European Buckthorn
* Purple Loosestrife

GRAPHIC SCALE

50 0 25 50 100 200

(in feet)

1 INCH = 50 FEET

SPECIFICATIONS FOR CONSTRUCTION

1 GENERAL NOTES

1.1 THESE DESIGN DOCUMENTS WERE PREPARED BY 'VORTEX AQUATIC STRUCTURES INTERNATIONAL' FOR THE USE OF THEIR CLIENT ONLY. THE MATERIAL USED AND IDENTIFIED IN THEM REFLECTS VORTEX AQUATIC STRUCTURES INTERNATIONAL'S BEST JUDGMENT IN LIGHT OF THE INFORMATION AVAILABLE AT THE TIME OF PREPARATION. FOR THE PURPOSE OF THESE DESIGN DOCUMENTS, 'VORTEX AQUATIC STRUCTURES INTERNATIONAL' IS SYNONYMOUS WITH 'VORTEX'.

1.2 VORTEX ACCEPTS NO RESPONSIBILITY FOR DAMAGES, IF ANY, SUFFERED BY ANY THIRD PARTY AS A RESULT OF DECISIONS MADE OR ACTIONS BASED ON THESE DESIGN DOCUMENTS WITHOUT THE PREVIOUS CONSULTATION TO VORTEX.

1.3 ALL WORK, MATERIALS AND THEIR ASSEMBLIES SHALL CONFORM TO THE STANDARDS, REGULATIONS AND CODES CURRENTLY IN FORCE FOR ALL TRADES, AISC, ACNOR, EN, OR IBC.

1.4 THESE DESIGN DOCUMENTS DO NOT INDICATE THE METHOD OR MEANS OF CONSTRUCTION. WHEN APPLICABLE, THE CONTRACTORS SHALL SUPERVISE AND DIRECT ALL THE WORK AND SHALL BE SOLELY RESPONSIBLE FOR ALL CONSTRUCTION MEANS, METHODS, PROCEDURES AND SEQUENCES AS PER STANDARD BEST PRACTICES.

1.5 DO NOT SCALE DRAWINGS.

1.6 USE ONLY THOSE MARKED "ISSUED FOR CONSTRUCTION".

1.7 THE CONTRACTOR SHALL REVIEW THESE DESIGN DOCUMENTS AND REPORT ANY CONFLICTS OR OMISSIONS TO THE VORTEX IMMEDIATELY.

1.8 TEMPORARY SUPPORTS, WHICH WILL BE REQUIRED DURING CONSTRUCTION, SUCH AS FORMWORK, BRACING, SHORING, ETC. ARE NOT SHOWN ON THESE DRAWINGS AND ARE THE RESPONSIBILITY OF THE CONTRACTOR. THE CONTRACTOR IS RESPONSIBLE TO ENSURE THAT ALL SAFE CONSTRUCTION PROCEDURES ARE FOLLOWED.

1.9 THE FOLLOWING SPECIFICATIONS ARE VORTEX'S MINIMUM RECOMMENDATIONS TO OBTAIN A QUALITY PRODUCT. THE CONTRACTOR SHALL FOLLOW THE LOCAL CODES IF MORE RESTRICTIVE.

1.10 ALL SEEFLOW COMPONENTS TO BE SNUG-TIGHT ONLY. USING POWER TOOLS OR TIGHTEN HARDWARE FULLY-TENSIONED CAN PRODUCE CRACKING ON THE PLASTIC.

2 EXCAVATION

2.1 ANY SHORING OR TEMPORARY SHORING NOT SHOWN ON DRAWINGS WILL BE EXECUTED, IN A SAFE MANNER, BY THE GENERAL CONTRACTOR.

2.2 IT IS THE RESPONSIBILITY OF OTHERS TO VERIFY THE EXISTENCE OF ANY UNDERGROUND SERVICES ETC.

2.3 IF AVAILABLE, REFER TO SOIL REPORT FOR BACKFILL REQUIREMENTS. ALL BACKFILL (FOR SLAB ON GRADE, ETC.) MUST BE DONE IN ACCORDANCE WITH THE RECOMMENDATIONS OF A QUALIFIED PROFESSIONAL. USE ONLY FREE DRAINING, GRANULAR, MINERAL, INERT AND NON- REACTIVE FILL.

3 FOUNDATIONS

3.1 REFER TO SOIL REPORT FOR RECOMMENDATIONS.

3.2 ALL FOOTINGS SHALL REST ON A HOMOGENEOUS LAYER OF UNDISTURBED SOIL OR ENGINEERED BACKFILL WITH A MINIMUM ALLOWABLE BEARING CAPACITY OF 100KPA (2000 PSF) AND MAXIMUM DIFFERENTIAL SETTLEMENT OF 19 MM (0.75"). ALL ORGANIC MATERIAL SHALL BE REMOVED.

3.3 IT IS THE CONTRACTOR'S RESPONSIBILITY TO ENSURE THAT THE SOIL AT ALL FOOTING LOCATIONS BE VERIFIED BY A QUALIFIED SOILS EXPERT BEFORE POURING FOOTINGS TO ENSURE FOOTINGS REST ON APPROPRIATE STRATA.

3.4 WHEN APPLICABLE, FOLLOW GEOTECHNICAL EXPERT RECOMMENDATIONS FOR ALL EXTERIOR FOOTINGS TO ENSURE FROST PROTECTION.

4 CONCRETE

4.1 ALL CONCRETE MATERIALS, PROCEDURES, TOLERANCES & WORKMANSHIP SHALL CONFORM TO THE LATEST ISSUES OF ACI-318 AND ACI 317 OR ACNOR CAN3-A23.1 & A23.2, DEPENDING ON PROJECT LOCATION.

4.2 CONCRETE THAT HAS BEEN IN THE TRUCKS LONGER THAN 2 HOURS SHALL BE REJECTED. DO NOT ADD WATER TO THE CONCRETE IN THE TRUCKS OR ON THE SITE UNDER ANY CIRCUMSTANCES.

4.3 USE MAXIMUM 76mm (3") SLUMP, 19mm (3/4") AGGREGATE, UNLESS OTHERWISE-NOTED. USE 5-7% AIR ENTRAINMENT FOR CONCRETE EXPOSED TO WEATHER ONLY.

4.4 ALL GROUT SHALL BE NON-SHRINK TYPE WITH A MINIMUM 28 DAYS STRENGTH OF 35.0 MPA (5000 PSI). USE 25 MM (1") GROUT UNDER ALL STEEL COLUMN BASE PLATES.

4.5 CONCRETE STRENGTH @ 28 DAYS TO BE:

4.5.1 FOUNDATIONS (FOOTINGS): 25.0 MPA (3500 PSI), UNLESS OTHERWISE NOTED.

4.5.2 INTERIOR SLAB ON GRADE: 25.0 MPa (3500 PSI), UNLESS OTHERWISE NOTED.

4.5.3 EXTERIOR SLAB ON GRADE: 32.0 MPa (4500 PSI), UNLESS OTHERWISE NOTED.

4.6 MINIMAL RE-BAR COVER:

4.6.1 CONCRETE POURED ON-GRADE = 76mm (3") COVER

4.6.2 CONCRETE POURED INTO FORMWORK BUT EXPOSED TO SOIL AND WEATHER FOR REBAR 15m (#4) AND UNDER = 50mm (2") COVER

5 REINFORCING STEEL

5.1 DEPENDING ON PROJECT LOCATION, ALL REINFORCING STEEL SHALL CONFORM TO ASTM A615 (BARS 15m (#4) TO BE GRADE 60 WITH SUPPLEMENTARY REQUIREMENTS ON S1.

BARS SMALLER THAN 15m (#4), TO BE GRADE 40); OR TO ACNOR GRADE G30.12 [FY = 400MPA (60,000 PSI), UNLESS OTHERWISE NOTED].

5.2 USE CONCRETE, PLASTIC OR STEEL SUPPORT BARS, AS PER ACI (MANUAL OF STANDARD PRACTICE FOR DETAILING CONCRETE STRUCTURES). THE RE-BAR PLACER MUST REMAIN ON-SITE DURING POURS TO VERIFY CORRECT POSITIONING OF RE-BARS. SLANT UPPER REINFORCING STEEL IN LINE WITH THE SLOPE OF THE SLAB, IF APPLICABLE.

5.3 BARS SHALL BE SECURELY WIRED PER LATEST EDITION OF CRSI (RECOMMENDED PRACTICE FOR PLACING REINFORCING BARS).

5.4 ALL REINFORCING STEEL IS TO BE KEPT CLEAN AND FREE OF MUD, SNOW, ICE, AND ANY CONTAMINANTS.

5.5 VERTICAL AND CONTINUOUS REBAR SHALL BE LAPPED TO DEVELOP FULL TENSILE CAPACITY OF THE BAR. FOR 15M (#4) BARS MINIMUM LAP OF 610mm (24").

6 EXTERIOR / INTERIOR SLAB ON GRADE

6.1 FOLLOW THE GEOTECHNICAL EXPERT RECOMMENDATIONS FOR PREPARATION OF SOIL BEFORE POURING THE CONCRETE. ALL GRANULAR MATERIAL SHALL BE MOISTENED

IMMEDIATELY BEFORE POURING THE CONCRETE. WATER AS NEEDED. DO NOT USE A VAPOR BARRIER.

6.2 NO TRUCKS ARE PERMITTED ON THE CONSTRUCTION SITE (OF THE SLAB) AFTER THE FINAL COMPACTION, EITHER BEFORE OR DURING, THE POUR.

6.3 SLAB TO BE MINIMUM 6" THICK, REINFORCED WITH 10m (#3) @ 300mm (12") C/C REBAR PLACED IN BOTH DIRECTIONS AT MID-HEIGHT OF THE SLAB, UNLESS OTHERWISE NOTED ON PLANS.

6.4 REFER TO CONCRETE SECTION FOR MINIMUM COMPRESSIVE STRENGTH AND AIR-ENTRAINMENT REQUIREMENTS.

6.5 FINISHING WILL BE MEDIUM BROOM.

6.6 CONTROL JOINTS (SAW-CUTS) TO BE LOCATED IN EACH DIRECTION, AT REGULAR INTERVALS, WITH A MAXIMUM DISTANCE OF 3 METERS (10 FEET). SHALL BE MINIMUM 3 MM (1/8") WIDE AND SHALL PENETRATE THE SLAB TO A MINIMUM DEPTH OF 1/3 OF THE THICKNESS OF THE SLAB. CONTROL JOINTS SHOULD BE DONE AS SOON AS POSSIBLE WITHOUT DAMAGING THE CONCRETE, BUT NO LATER THAN 18 HOURS AFTER POURING.

6.7 WHEN POSSIBLE AND TO AVOID SHRINKAGE CRACKING, HUMIDITY SHALL BE MAINTAINED FOR 7 DAYS DURING THE CURING PERIOD OF THE SLAB. WATER AND USE POLYETHYLENE CLOTH OR BAG. THE CONCRETE MUST DRY UNIFORMLY.

7 CONCRETE WORK IN COLD OR HOT WEATHER (MINIMUM REQUIREMENTS)

7.1 COLD WEATHER REQUIREMENTS APPLY WHEN THE MEAN AIR IS LESS THAN 5 DEGREES CELSIUS (40 DEGREES FAHRENHEIT).

7.2 GENERAL REQUIREMENTS FOR COLD WEATHER CONCRETE WORK SHALL BE AS PER ACI 306R-88; OR AS PER THE NBC'S LATEST REQUIREMENTS INCLUDING THE LATEST ISSUE OF CSA STANDARD CAN3-A23.1.

7.3 ALL SNOW AND ICE SHALL BE REMOVED FROM FORMS AND REBAR WITH STEAM AND COMPRESSED AIR BEFORE POURING. DO NOT USE DE-ICING SALT (CALCIUM CHLORIDE) OR ANY OTHER SALTS UNDER ANY CIRCUMSTANCES.

7.4 CONCRETE SHALL HAVE A MINIMUM TEMPERATURE OF 20 DEGREES CELSIUS AND A MAXIMUM TEMPERATURE OF 25 DEGREES CELSIUS WHILE POURING. IT IS THE CONTRACTOR'S RESPONSIBILITY TO ENSURE THAT THESE REQUIREMENTS ARE SATISFIED. ANY CONCRETE THAT DOES NOT CONFORM MUST BE REJECTED.

7.5 THE SURFACE OF POURED CONCRETE SHALL BE PROTECTED BY MEANS OF SUITABLE COVERINGS AND INSULATION (TO BE DETERMINED BY TEMPERATURE) DURING THE CURING PROCESS.

7.6 GENERAL REQUIREMENTS FOR HOT WEATHER CONCRETE WORK SHALL BE AS PER ACI 305R-99; OR AS PER LOCAL CODE REQUIREMENTS.

8 PIPING

8.1 WDS CONFIGURATION ARE SCHEMATIC AND MAY BE MOVED OR ADJUSTED ON SITE BY VORTEX CERTIFIED INSTALLER TO ADJUST FOR SITE CONDITIONS.

8.2 ANY REQUIRED BACKFLOW PREVENTER, PRESSURE REGULATOR & WATER METER ON THE CITY WATER MAIN SHALL BE PROVIDED BY OTHER.

8.3 ALL PIPE LINES TO FEATURES TO HAVE A 1% MINIMUM RECOMMENDED SLOPE FOR PROPER WINTERIZATION.

8.4 ALL LINE SIZING (FEATURE CONNECTION TABLE) ASSUMES A MAXIMUM DISTANCE OF 30 FEET BETWEEN THE WATER DISTRIBUTION MANIFOLD AND THE FURTHEST PLAY PRODUCT. DISTANCES ABOVE 30 FEET MAY REQUIRE AN INCREASE IN LINE SIZING. PLEASE CONTACT VORTEX.

8.5 FINAL LOCATION OF DRAIN AND LINE ROUTING ARE TO BE DETERMINED BY OTHERS.

8.6 PRESSURE LINES ARE RECOMMENDED TO BE SCHEDULE K-COPPER, AND NON-PRESSURE LINES TO BE SCHEDULE 40, UNLESS OTHERWISE REQUESTED BY LOCAL CODE.

8.7 DRAINAGE LINES ARE RECOMMENDED TO BE SDR 35, UNLESS OTHERWISE REQUESTED BY LOCAL CODE.

8.8 PIPING SHOULD BE INSPECTED AFTER TRANSPORTATION FOR CUTS, SCRATCHES, GOUGES OR SPLITS; DAMAGED SECTIONS MUST BE DISCARDED OR CUT OUT.

8.9 PIPE SHALL BE INSTALLED BELOW THE FROST LEVEL NOT LESS THAN 12" (ASTM F-645) UNLESS OTHERWISE REQUESTED BY LOCAL CODE.

8.10 PIPE INSTALLATION MINIMUM COVER SHOULD BE EVALUATED ACCORDING TO ASTM D-2774, UNLESS OTHERWISE REQUESTED BY LOCAL CODE.

8.11 SPECIAL CONSIDERATIONS SHOULD BE TAKEN FOR THERMAL CONDITIONS, EXPANSION AND CONTRACTIONS DUE TO TEMPERATURE SHOULD BE EVALUATED BEFORE THE INSTALLATION BY THE CONTRACTOR.

8.12 MINIMUM 50 PSI REQUIRED AT THE INLET OF THE BACKFLOW PREVENTER AND PRESSURE REGULATING DEVICE.

8.13 MAXIMUM FLOW CAPACITY OF HYDRAULIC ACTIVATOR IS 45 GPM.

8.14 TOTAL FLOW OF THE FEATURES IS 48.4 GPM.

8.15 THERE IS NO SEQUENCING, FEATURES ARE ON WHEN ACTIVATOR IS PRESSED.

9 ELECTRICAL

9.1 EQUIPMENT BONDING; FEATURES SHALL BE CONNECTED TO AN EQUIPOTENTIAL BONDING GRID WITH A SOLID RIGID COPPER CONDUCTOR, THE MINIMUM SIZE OF BONDING CONDUCTORS NOT BE SMALLER THAN #6 AMERICAN WIRE GAUGE (AWG) ($16mm^2$) COPPER. BOND TO ALL METALLIC PARTS LOCATED IN THE SPLASHPAD/POOL AND TO THE REBAR, TO RUN CONTINUOUS TO THE WATER PUMP AND ELECTRICAL SUPPLY PANELS.

9.2 GRID STRUCTURE; THE EQUIPOTENTIAL BONDING GRID SHALL COVER THE CONTOUR OF THE WATER BODY AREA AND ANY DECK EXTENDING 3FT (1m). HORIZONTALLY FROM THE INSIDE WALLS OF THE SPLASHPAD/WATER BODY. THE EQUIPOTENTIAL BONDING GRID SHALL BE ARRANGED IN A 12 IN (300mm). BY 12 IN (300mm). NETWORK OF CONDUCTORS IN A UNIFORMLY SPACED PERPENDICULAR GRID PATTERN WITH TOLERANCE OF 4 IN (100mm). A J-JUNCTION BOND CLAMP (DIRECT BURIAL CERTIFIED) CLAMPED TO A REBAR WITH WIRE LOOPED THROUGH CONNECTOR AND CLAMPED TO STEEL AND TO THE SPLASHPAD/POOL PUMP WATER

9.3 ALL ELECTRICAL EQUIPMENT SHALL BE GROUNDED; THE FOLLOWING EQUIPMENT SHALL BE GROUNDED. ALL ELECTRICAL EQUIPMENT LOCATED WITHIN 5FT (1.5 m) OF THE INSIDE WALL OF THE SPECIFIED BODY OF WATER." THIS EQUIPMENT ALSO INCLUDES (BUT NOT LIMITED TO): FEATURES, ELEVATIONS, DRAIN, REBAR, WATER INLET, SKIMMER, LADDER, SLIDES, DIVING STRUCTURE, UNDERWATER LIGHTING, JUNCTION BOXES, AND WATER CIRCULATING/HEATING EQUIPMENT.

ALL BONDING AND GROUNDING MUST COMPLY WITH NEC, CEC, AND LOCAL CODES.

9.4 ALTERNATE MEANS; WHERE STRUCTURAL REINFORCING STEEL IS NOT AVAILABLE OR IS ENCAPSULATED IN A NONCONDUCTIVE COMPOUND, A COPPER CONDUCTOR(S) SHALL BE UTILIZED WHERE THE FOLLOWING REQUIREMENTS ARE MET: (1) AT LEAST ONE MINIMUM 6 AWG BARE SOLID COPPER CONDUCTOR SHALL BE PROVIDED. (2) THE CONDUCTORS SHALL FOLLOW THE CONTOUR OF THE PERIMETER SURFACE. (3) ONLY LISTED SPLICES SHALL BE PERMITTED. (4) THE REQUIRED CONDUCTOR SHALL BE 18 IN TO 24 IN (450mm TO 600mm) FROM THE INSIDE WALLS OF THE POOL. (5) THE REQUIRED CONDUCTOR SHALL BE SECURED WITHIN OR UNDER THE PERIMETER SURFACE (4 IN TO 6 IN (100mm TO 150mm). BELOW THE SUBGRADE.

9.5 SPLASHPAD/POOL WATER; WHERE NONE OF THE BONDED PARTS IS IN DIRECT CONNECTION WITH THE POOL WATER, THE POOL WATER SHALL BE IN DIRECT CONTACT WITH AN APPROVED CORROSION-RESISTANT CONDUCTIVE SURFACE THAT EXPOSED NOT LESS THAN 9 IN.2 ($5800mm^2$) OF SURFACE AREA TO THE POOL WATER AT ALL TIMES. THE CONDUCTIVE SURFACE SHALL BE LOCATED WHERE IT IS NOT EXPOSED TO PHYSICAL DAMAGE OR DISLODGEMENT DURING USUAL POOL ACTIVITIES, AND IT SHALL BE BONDED IN ACCORDANCE WITH NEC, CEC, AND LOCAL CODES.

Drawing #	Drawing Name	Rev #
P-001	Plumbing Layout	00
E-003	Bonding Layout	00

VORTEX USA Inc.
3500 South Dupont Highway, Suite EP-101
Dover, Delaware
United States 19901
Phone: +1 (877) 586-7839

COPYRIGHT VORTEX USA Inc-THIS DOCUMENT AND THE IDEAS, RENDERINGS AND OTHER CONTENTS CONTAINED THEREIN ARE THE SOLE PROPETY OF VORTEX USA Inc AND MAY NOT BE DISSEMINATED, COPIED, REPRODUCED OR OTHERWISE USED WITHOUT PRIOR WRITTEN CONSENT OF VORTEX USA Inc.

Hurld Park Splashpad

Abbreviations	
A	Architectural
C	Civil Work
P	Plumbing Layout
PD	Plumbing Details
E	Electrical Layout
ED	Electrical Details
FT	Feature Drawings

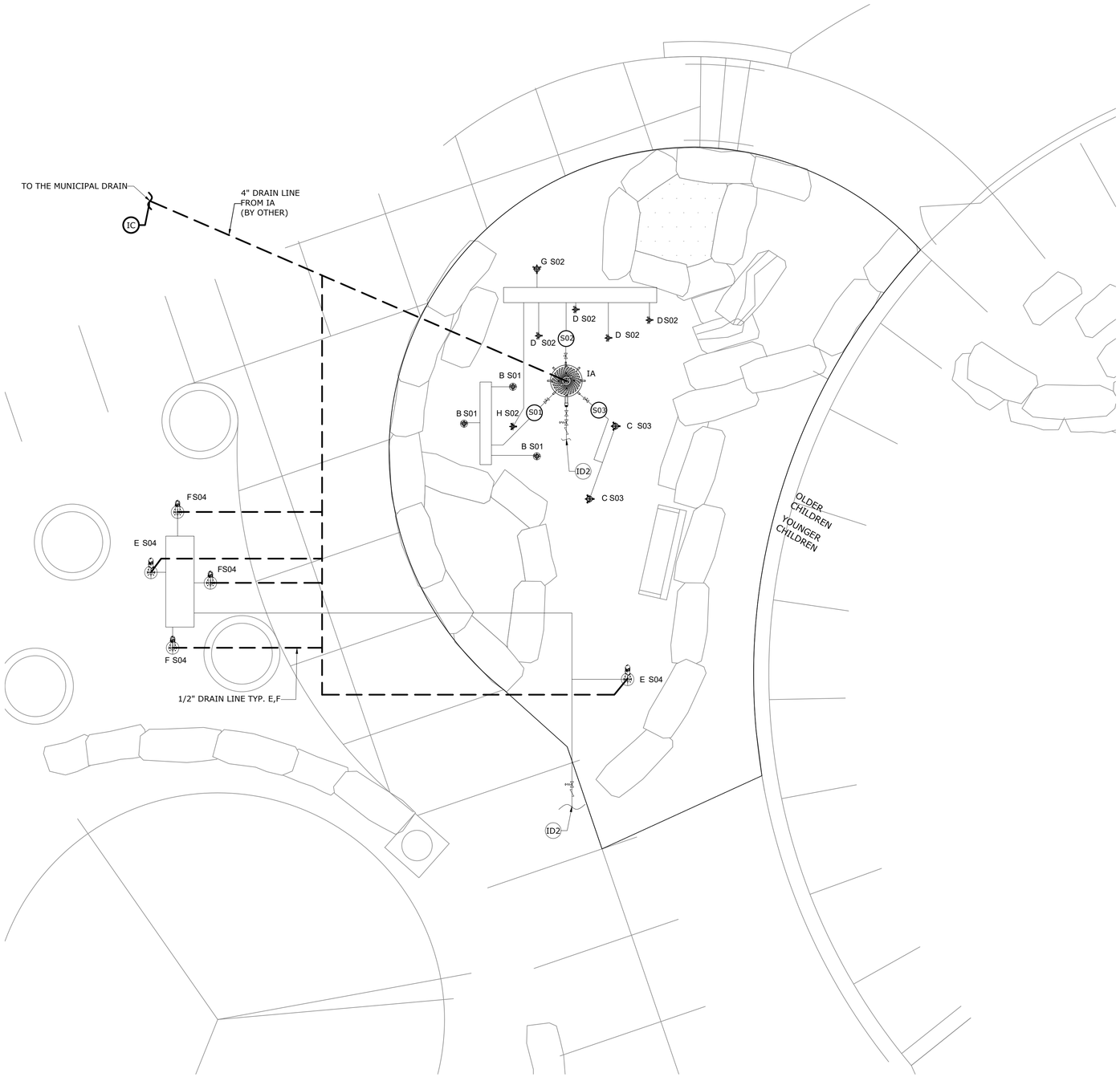

1 / P-001 PLUMBING LAYOUT

WATER LINE
DRAIN LINE

Feature Connection Table						
Manifold Output Ref.	Gate Valve	Feature Ref.	Feature	Qty	Line Size	Gpm
S01	1"	B	Water Jelly N°1 VOR 7010	3	1 1/2"	18.0
S02	1"	D	Jet Stream N°1 VOR 7512	4	1 1/2"	10
		G	Sparkle N°1 VOR 0324	1		3
		H	Geyser N°1 VOR 0301	1		7.5
S03	1"	C	Magic Mist N°2 VOR 8099	2	1"	9

Manifold Output Ref.	Feature Ref.	Feature	Qty	Line Size	Gpm
S04	E	Glomist VOR 7247	2	1"	0.8
	F	Glomist Nano VOR 7248	3		0.6

Product Legend		
Product Ref.	Product	Qty
IA	Push Button Activator VOR 0605	1
IC	4" Drain Line To Municipal Drain (By Other)	1
ID1	1 1/2" City Water Line (By Other)	1
ID2	1" City Water Line (By Other)	1
	1 1/2" Pressure Regulator (by Other)	1
	1 1/2" Backflow Preventer (by Other)	1
	1" Pressure Regulator (by Other)	1
	1" Backflow Preventer (by Other)	1
	1 1/2" Ball Valve located Inside Hydraulic Activator (by Vortex)	1
	1" Gate Valve located inside the Hydraulic Activator (by Vortex)	3

VORTEX

VORTEX USA Inc.
3500 South Dupont Highway, Suite EP-101
Dover, Delaware
United States 19901
Phone: +1 (877) 586-7839

COPYRIGHT VORTEX USA Inc-THIS DOCUMENT AND THE IDEAS, RENDERINGS AND OTHER CONTENTS CONTAINED THEREIN ARE THE SOLE PROPETY OF VORTEX USA Inc AND MAY NOT BE DISSEMINATED, COPIED, REPRODUCED OR OTHERWISE USED WITHOUT PRIOR WRITTEN CONSENT OF VORTEX USA Inc.

Hurld Park Splashpad

Project Location
Woburn, MA

Project Number
42368

Version
VC

Date	Revision Description	No.	By
05/Nov/2025	Issued for Approval	00	SN

Drawing Title
Plumbing Layout

Drawn by	Verified by
SN	MAB
Scale	**Date**
1/4"=1'-0"	05/Nov/2025

Page #
P-001

Ref	Product	Qty
IA	Push Button Activator VOR 0605	1
B	Water Jelly N°1 VOR 7010	3
C	Magic Mist N°2 VOR 8099	2
D	Jet Stream N°1 VOR 7512	4
E	Glomist VOR 7247	2
F	Glomist Nano VOR 7248	3
G	Sparkle N°1 VOR 0324	1
H	Geyser N°1 VOR 0301	1

1
E-003

BONDING LAYOUT

1. REFER TO SPECS ON COVER PAGE
2. COORDINATE THIS DRAWING WITH ARCHITECTURAL, CIVIL, PLUMBING & ELECTRICAL.

BONDING WIRE - - - - - - - - - - - - - -

VORTEX

VORTEX USA Inc.
3500 South Dupont Highway, Suite EP-101
Dover, Delaware
United States 19901
Phone: +1 (877) 586-7839

COPYRIGHT VORTEX USA Inc-THIS DOCUMENT AND THE IDEAS, RENDERINGS AND OTHER CONTENTS CONTAINED THEREIN ARE THE SOLE PROPETY OF VORTEX USA Inc AND MAY NOT BE DISSEMINATED, COPIED, REPRODUCED OR OTHERWISE USED WITHOUT PRIOR WRITTEN CONSENT OF VORTEX USA Inc.

Hurld Park Splashpad

Project Location
Woburn, MA

Project Number
42368

Version
VC

Date	Revision Description	No.	By
05/Nov/2025	Issued for Approval	00	SN

Drawing Title
Bonding Layout

Drawn by	Verified by
SN	MAB
Scale	Date
1/2"=1'-0"	05/Nov/2025

Page #
E-003

SECTION 31 13 19 – INVASIVE PLANT REMOVAL (REVISED)

PART 1 GENERAL

1.1 SUMMARY

A. Section includes: The work associated with invasive species removal by means of mechanical and chemical control. Invasive and nuisance species work on site includes Japanese Knotweed, Asiatic Bittersweet, and any other understory invasive species (shrub, vine, forb, or grass), and trees under 2" caliper that are identified on the Massachusetts Prohibited Plant List, and are within the Limit of Work depicted on the Drawings, regardless of if it is identified on the drawings or not.

B. Any infested soil and/or plant material including plant leaves, stems, and roots within the Limit of Work is to be reused in place or removed and disposed of off-site. Under no circumstances is soil infested with invasive plant biomass, stems, and roots to be re-located elsewhere on the project site. Any removed infested soils will require transportation to an appropriate disposal facility.

C. Any soil infested with Japanese knotweed, including plant leaves, stems, and roots within the Limit of Work, is to be removed and disposed of off-site. Under no circumstances is soil infested with Japanese knotweed to be reused on site and will require transportation to an appropriate disposal facility.

D. Related Sections:
   1. Section 31 20 00 – Earth Moving
   2. Section 31 10 00 – Site Clearing
   3. Section 31 25 00 – Erosion and Sediment Control
   4. Section 32 91 19 – Landscape Grading
   5. Section 32 92 19 – Seeding
   6. Section 32 93 00 – Plants

E. Review and follow all items within the Woburn Conservation Commission Order of Conditions DEP# 348-867.

1.2 COORDINATION

A. Meeting: A meeting is to be held at the site prior to commencement of any site work to discuss invasive species control activities. The earthwork contractor, the invasive management specialist, the landscape contractor, and the landscape architect or environmental scientist must be present at this meeting.

B. Approach: The approach to invasive management is to be tied into the construction sequence, with three treatment occurrences and site monitoring. Times of treatment are given to align with site earth work and planting. Methods used for treatment are at the discretion of the contractor but must be approved. Coordinate with the Owner and Landscape Architect to confirm schedule and approaches prior to commencing work under this Section.

C. Approvals: The Work Plan and Schedule must be approved by the Woburn Conservation Commission (Commission) prior to any work beginning.

1.3 SUBMITTALS

A. Work Plan & Schedule: Schedule and management techniques to be used to treat invasive species within the limit of work during construction. Include dates, management techniques, and plan for soil stock piling / transport. Plan must be approved by Landscape Architect or Environmental Scientist before beginning. Plan must be approved by the Conservation Commission as outlined in the Order of Conditions.

B. Herbicide Product Data
   1. Provide the following information:
      a. Material properties – all herbicides must be for aquatic use
      b. Material Safety Data Sheet (MSDS)
   2. Supplier: Name, address, and phone number.
   3. Certification credentials of individual licensed to apply and/or oversee herbicide applications.

C. Manufacturer's Certificate: Certify products meet or exceed the specified requirements.

D. Disposal Facility: Name and address of the facility in which the weed infested soils are to be disposed, only if approved and necessary.

E. Contactor to provide written qualification data for firm and person(s) to be responsible for work to demonstrate their capabilities and experience as outlined in Qualification for invasives removal.

F. Contractor to provide current Massachusetts herbicide applicator certificate of person(s) to perform work where herbicides are to be used.

1.4 CLOSEOUT SUBMITTALS

A. Management Reports: Submit reports with images, descriptions and dates of work performed in compliance with the previously approved Work Plan and Schedule from Section 1.3.A

B. Maintenance: Submit recommended procedures for routine year-round management of invasives previously present on site to owner.
   1. Include strategies for management for both manual & chemical treatment.
   2. Include time of year and schedule for maintenance activities.

1.5 QUALIFICATIONS

A. The selected contractor must have at least one staff member on-site who is trained and certified in invasive plant identification. The contractor may, alternatively, provide a sub-contractor with the required expertise.

B. The selected contractor must have at least one staff member on-site who is trained and certified by the Commonwealth of Massachusetts in herbicide application. The contractor may, alternatively, provide a sub-contractor with the required expertise.

C. The contractor completing the work must have a certificate in invasive management or equivalent.

D. The selected contractor is to have a minimum of five years of documented experience with invasive management including application and use of herbicides.

1.6 DELIVERY, STORAGE AND HANDLING

A. Deliver, handle, and store materials in accordance with supplier's instructions.

B. Do not order or deliver materials until required certificates, product information, supplier information, and facility information has been reviewed and approved by the landscape architect.

PART 2 PRODUCTS

2.1 HERBICIDES FOR CHEMICAL CONTROL

A. All herbicides and chemicals must be for aquatic use.

B. Utilize herbicides for individual species as required.

C. Outline herbicides proposed and percentages / mixtures in Work Plan and Schedule.

PART 3 EXECUTION

3.1 TREATMENT AREA

A. Invasive and nuisance species work on site includes Japanese Knotweed, Asiatic bittersweet, and any understory invasive species (shrub, vine, forb, or grass), and trees under 2” caliper that are identified on the Massachusetts Prohibited Plant List and are within the Limit of Work depicted on the Drawings, regardless of if species is identified on the drawings.

3.2 EXAMINATION

A. Inspect all areas within the Limit of Work. Identify all invasives present and flag large stands of invasive plants.

3.3 PREPARATION

A. A combination invasive species management approach, including mechanical (cutting) and chemical (herbicide) treatment, can be utilized. Verify that soil management and plant treatment techniques are coordinated with site work.

B. Flag all areas where soil should not be reused due to the presence of invasive plants, and specifically where soils are infested with Japanese knotweed. Maintain flags throughout duration of site work.

3.4 INFESTED SOIL STOCKPILE

A. Any infested soil and/or plant material including plant leaves, stems and roots, within the Limit of Work may be re-used in-place or else must be removed and disposed of off-site. Under no circumstances is soil infested with invasive plant biomass, stems, and roots to be re-used in any adjacent areas on the project site. Transportation to an appropriate disposal facility is required for any infested soils removed from the site.

B. Any soil infested with Japanese knotweed, including plant leaves, stems, and roots within the Limit of Work is to be removed and disposed of off-site. Under no circumstances is soil infested with Japanese knotweed to be reused on site and will these infested soils require transportation to an appropriate disposal facility.

C. Establish infested soil stockpile area during erosion controls and site clearing. Under no circumstances is removed biomass of invasive species to be stockpiled on site in undesignated areas. Coordinate with the Landscape Architect and/or Engineer if additional stockpiles are required.

D. Transport soil and invasive material to approved disposal site.

E. If there is a delay in transport or soil, surround the infested soil stockpile area with silt fence and straw bales as required to prevent overland flow from washing into or out of the area. Cover the infested soil stockpile area with black plastic or a tarp to minimize sun exposure to the invasive vegetation biomass.

3.5 INVASIVES MANAGEMENT SEQUENCE

A. FIRST TREATMENT

1. The first treatment is to occur at least two weeks prior to earth work activities in the areas where invasive species have been identified. If applicable based on species and time of year, herbicide is to be applied with a glove or by injection.
2. Treatment Acceptance:
    a. After treatment submit in writing the treatment performed with dates and imags to the Landscape Architect.
    b. The first treatment will be approved when all invasive vegetation has started to die or has been removed from the site. Additional applications or removal may be required. All invasive plant material must be removed from site prior to earth work.

B. SECOND TREATMENT

1. The second treatment must occur after final grades have been set, and before seeding and planting perennials and shrubs. Final grades are to be given at least three weeks to monitor if any invasive plants start to sprout before treatment. Contact the Landscape Architect to review the site prior to treatment. All regrowth from invasive species is to be removed mechanically if small in size or treated with herbicide. Any seeded areas damaged during treatment are to be replaced and amended.
2. Treatment Acceptance:
    a. After treatment, submit in writing the treatment performed with dates and images to the Landscape Architect.
    b. The treatment will be approved when all invasive plants within the treatment zone show signs of mortality, and no regrowth is visible one month after application. Follow-up applications may be required at no additional cost to the Owner if the initial application(s) are found to be only partially effective.

C. REVEGETATION

1. Plant and/or seed all areas as indicated on the Drawings ONLY following confirmation of no regrowth of invasive plants. Individual shoots that sprout amongst replanted vegetation shall be controlled by hand pulling, injection and/or “weed glove” methods only.

D. THIRD TREATMENT

1. The third treatment to occur one month after plants have been planted and site is starting to establish. Visit the site and review if invasive species are starting to emerge. If any are present, remove mechanically or spot treat as outlined in approved work plan. Any plants or seeded areas damaged during treatment are to be replaced. Individual shoots that sprout amongst replanted vegetation shall be controlled by hand pulling, injection and/or “weed glove” methods only.
2. Final Acceptance:
    a. After treatment, submit in writing the treatment performed with dates and images to the Landscape Architect.
    b. Contractor, Landscape Architect and Owner to convene on site one month after third treatment to review.
    c. The treatment will be approved and completed when all invasive plants within the treatment zone one month after application show signs of mortality and no regrowth is visible. Follow-up applications may be required at no additional cost to the Owner if the initial application(s) are found to be only partially effective.

E. MONITORING

1. Monitor all areas within the Limit of Work throughout construction for the appearance of invasive species. If any are present within the limit of work remove as appropriate based on species.

END OF SECTION

PROPERTY OF EARTHSCAPE PLAY INC. - DO NOT COPY. DO NOT DISTRIBUTE.

INSTALLATION INSTRUCTIONS

EARTHSCAPE COLLECTIONS

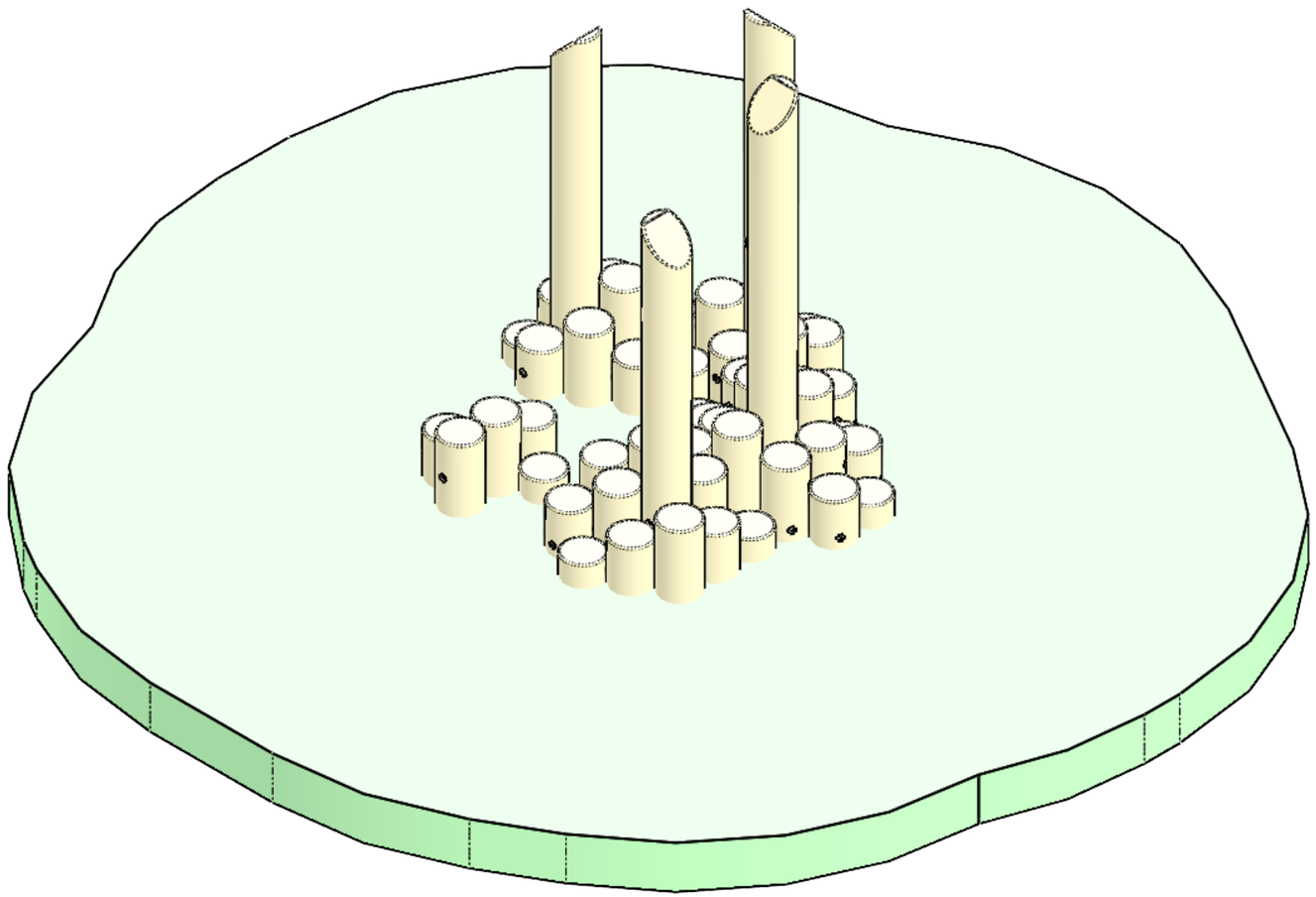

STEPPER CLUSTER M4

THESE INSTRUCTIONS APPLY TO THE FOLLOWING VERSIONS OF THIS PRODUCT:

F00496 - STEPPER CLUSTER M4
(CONCRETE FOUNDATION INSTALL)

NOTE: COLOURS SHOWN ARE REPRESENTATIONAL AND MAY NOT BE THE SAME AS THOSE OF THE SUPPLIED PRODUCT

DATE DOCUMENT RELEASED 2024-09-09
DOCUMENT NUMBER: 1063639-R2

PROPERTY OF EARTHSCAPE PLAY INC. - DO NOT COPY. DO NOT DISTRIBUTE.

SPECIFICATIONS

INTENDED USER AGE GROUP: 18m to 5y
MAXIMUM HEIGHT OF STRUCTURE: 2.74m
MAXIMUM DESIGNATED FALL HEIGHT: 0.60 m
AREA OF SURFACING: 34.9 m²
WEIGHT: 2222 kg

RECOMMENDED INSTALLATION BUFFER

Play equipment requires a variety of offsets to other elements in a playground. The plan view on this page shows the minimum recommended area needed for installing this piece of play equipment by itself. Combining this play equipment with other pieces should be reviewed by a person with a Certified Playground Safety Inspector training.
The offset shown here includes a buffer beyond the CSA requirements to account for fabrication and material variation.

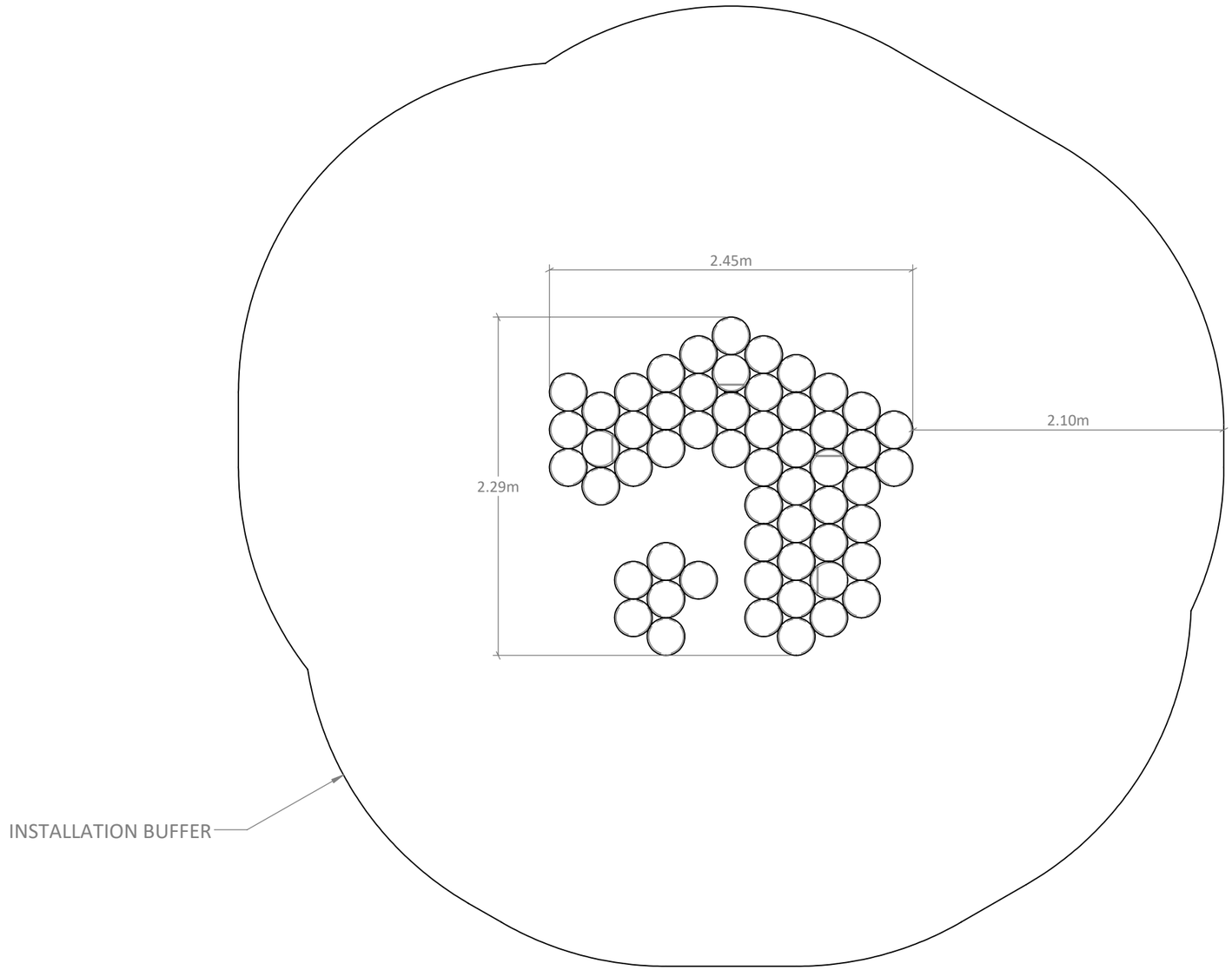

PROPERTY OF EARTHSCAPE PLAY INC. - DO NOT COPY. DO NOT DISTRIBUTE.

ASTM SPECIFICATIONS (FOR INSTALLATIONS AT U.S. SITES ONLY)

STEPPER CLUSTER M4

SPECIFICATIONS

INTENDED USER AGE GROUP: 2 to 5y
MAXIMUM HEIGHT OF STRUCTURE: 9'-0"
MAXIMUM DESIGNATED FALL HEIGHT: 2'-0"
AREA OF SURFACING: 376 ft²
WEIGHT: 4900 lb

RECOMMENDED INSTALLATION BUFFER

Play equipment requires a variety of offsets to other elements in a playground. The plan view on this page shows the minimum recommended area needed for installing this piece of play equipment by itself. Combining this play equipment with other pieces should be reviewed by a person with a Certified Playground Safety Inspector training.
The offset shown here includes a buffer beyond the ASTM requirements to account for fabrication and material variation.

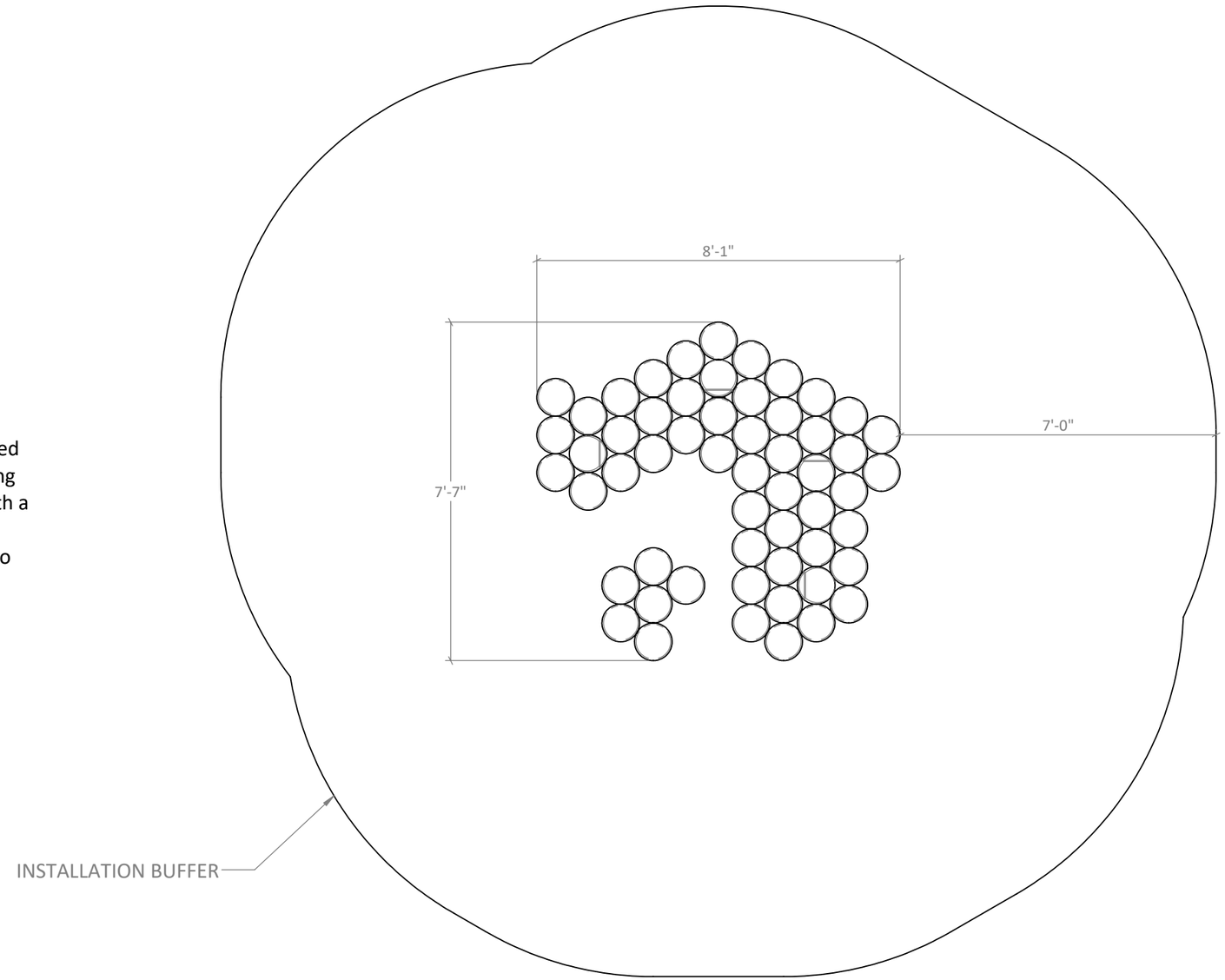

PROPERTY OF EARTHSCAPE PLAY INC. - DO NOT COPY. DO NOT DISTRIBUTE.

PLEASE READ ALL INSTRUCTIONS

Before starting to install this equipment be sure to read through and understand these instructions.
If you have any questions, contact your local dealer for assistance before proceeding.

MEASUREMENTS AND STANDARDS

Measurements have been provided in both metres and [feet-inches]. Ensure to follow standards noted for the location in which this play equipment is being installed. Those marked CSA are to be used in Canada and those marked ASTM to be used in the United States.

LIST OF ABBREVIATIONS

AYC = Alaskan Yellow Cedar
WRC = Western Red Cedar
DPS = Designated Play Surface
SS = Stainless Steel
HDG = Hot Dipped Galvanized
WWM = Welded Wire Mesh
TYP = Typical
C/W = Complete With
UNO = Unless Noted Otherwise
EWF = Engineered Wood Fiber
PIP = Poured-In-Place Rubber Surfacing
PT = Pressure Treated

TOOLS SUPPLIED WITH THIS PRODUCT

No Tools Supplied.

TOOLS THE INSTALLER NEEDS TO SUPPLY

High torque drill
Hammer drill
1/2" impact driver
Set of wood drill bits - up to 1/2"
Set of impact sockets - up to 1"
1/2" ratcheting socket wrench
T25 drive bit
T40 drive bit
Concrete drill bit, 1/2" x 8"
Angle grinder (with course 24 grit sanding disks and metal cut off disks)
Transit or Laser Level
Carpenter's Square
Rigging and lifting straps

EQUIPMENT THE INSTALLER NEEDS TO SUPPLY

Machine to lift and position heaviest element.
Stepper Cluster M4 - Trunk I +/-1030 kg [2275 lbs]

INSTALLER CREW AND TIME REQUIRED

Number of people needed: 2
Typical total person-hours to install: 16 + concrete cure time
Time breakdown:

- 4 hours x 2 people for excavation and pouring concrete
- Time for concrete cure
- 2 hours x 2 people for onsite fabrication and play equipment installation

MATERIALS THE INSTALLER NEEDS TO SUPPLY

Installer to supply materials for preparation, pour and cure of concrete. See Sheets 9 and 10.

WARNINGS

These instructions do not provide specific guidance on the use of tools or the lifting and moving heavy objects. It is assumed that competent people are installing this product who are familiar with using the tools and equipment required and are knowledgeable and skilled at lifting and positioning heavy objects.

PROPERTY OF EARTHSCAPE PLAY INC. - DO NOT COPY. DO NOT DISTRIBUTE.

MAKE SURE YOU HAVE ALL THE PARTS

Examine the equipment and ensure you have all the required parts listed in the table below.

See "As Shipped" Sheet to understand orientation of product as delivered to site.

ITEM NO.	PARTNO	DESCRIPTION	QTY.
1		STEPPER CLUSTER M4 - TRUNK I	1
2		STEPPER CLUSTER M4 - TRUNK II	1
3		STEPPER CLUSTER M4 - TRUNK III	1
4	B00060	6 X 6 DOCK BRACKET V2	10
5	H16685	WOOD SCREW, WASHER HEAD, M8X100, SS	40
6	H60020	TITEN HD 1/2" X 5" CONCRETE SCREW	20

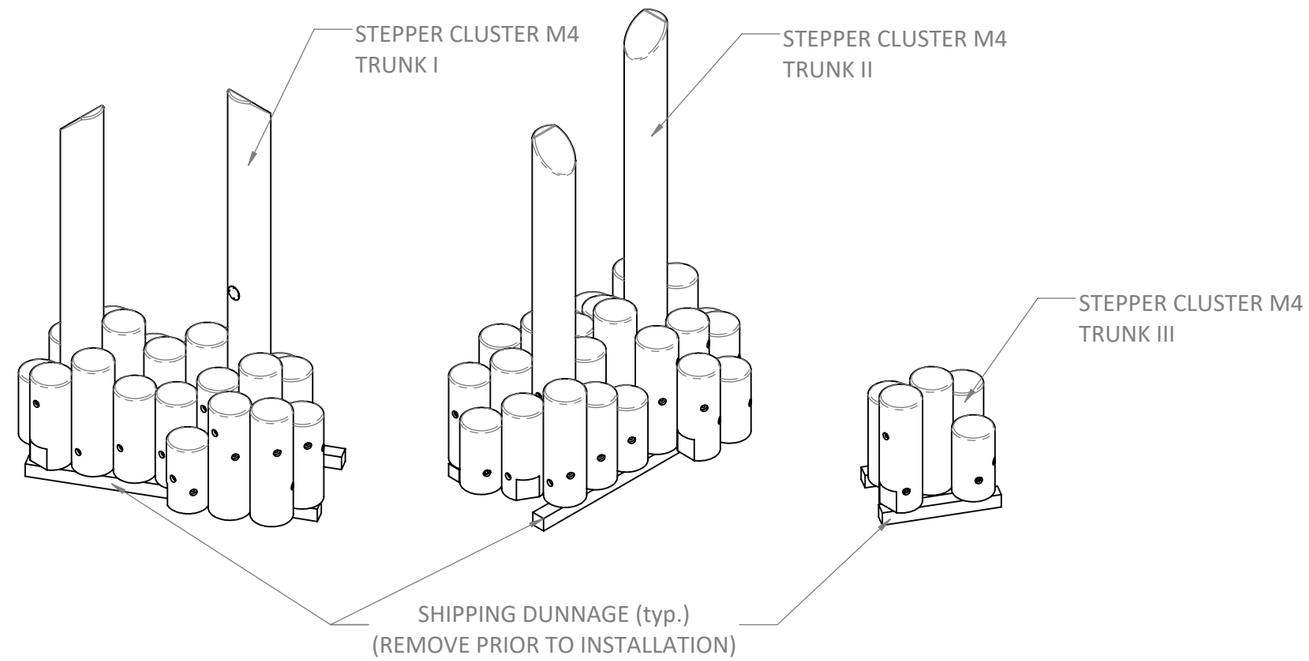

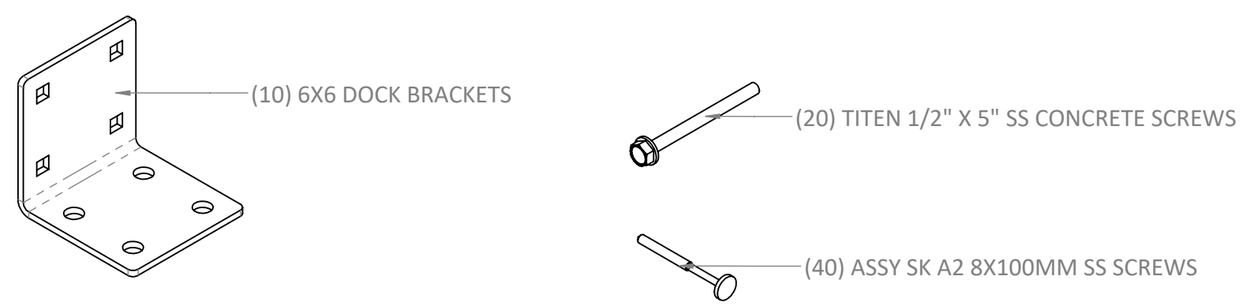

PROPERTY OF EARTHSCAPE PLAY INC. - DO NOT COPY. DO NOT DISTRIBUTE.

AS SHIPPED

STEPPER CLUSTER M4

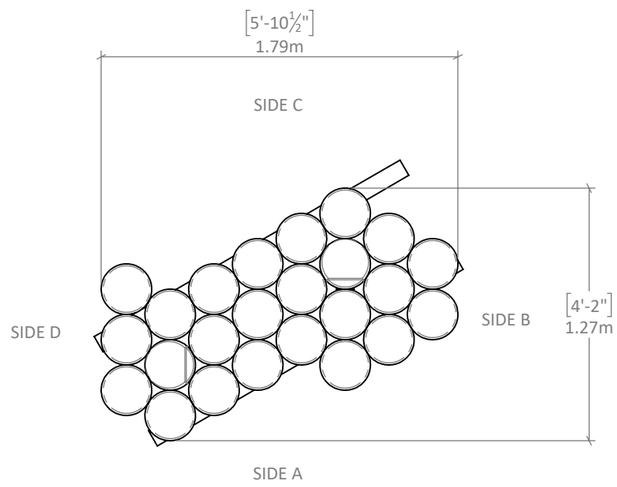

PLAN VIEW

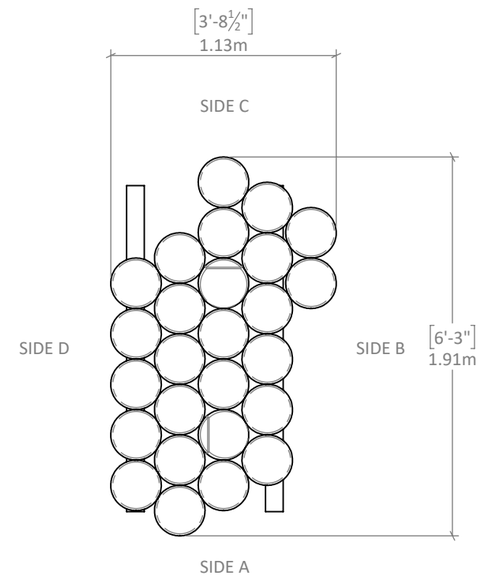

PLAN VIEW

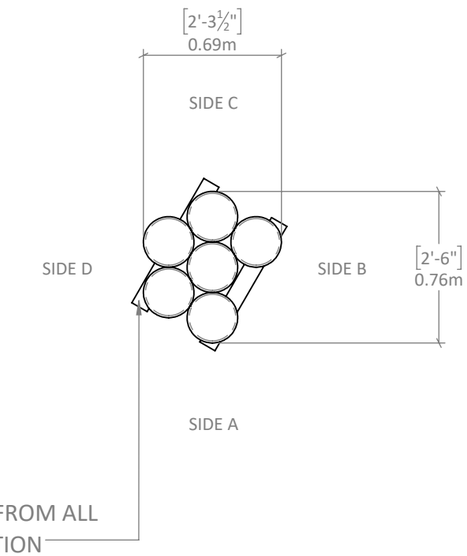

DUNNAGE TO BE REMOVED FROM ALL TRUNKS PRIOR TO INSTALLATION

PLAN VIEW

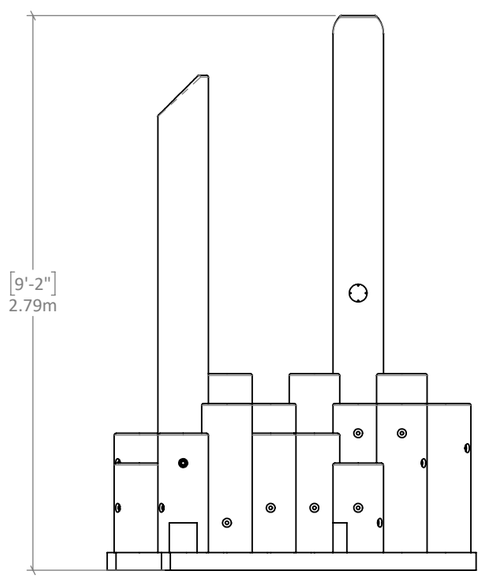

SIDE A

TRUNK I

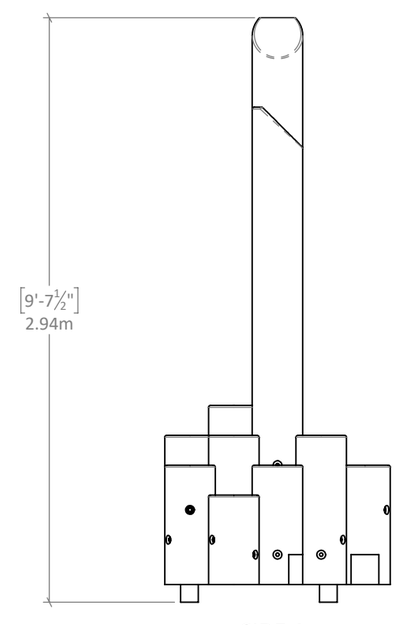

SIDE A

TRUNK II

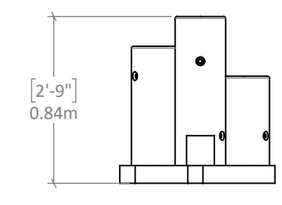

SIDE A

TRUNK III

PROPERTY OF EARTHSCAPE PLAY INC. - DO NOT COPY. DO NOT DISTRIBUTE.

HOW THE PIECES COME TOGETHER

The three pre-assembled Trunks of Stepper Cluster M4 are designed to fit with each other to form the overall finished assembly.
Trunks I and II will sit tightly together to create the majority of the assembly, while Trunk III will remain separate.

See Sheet 12 for assembly order and details.

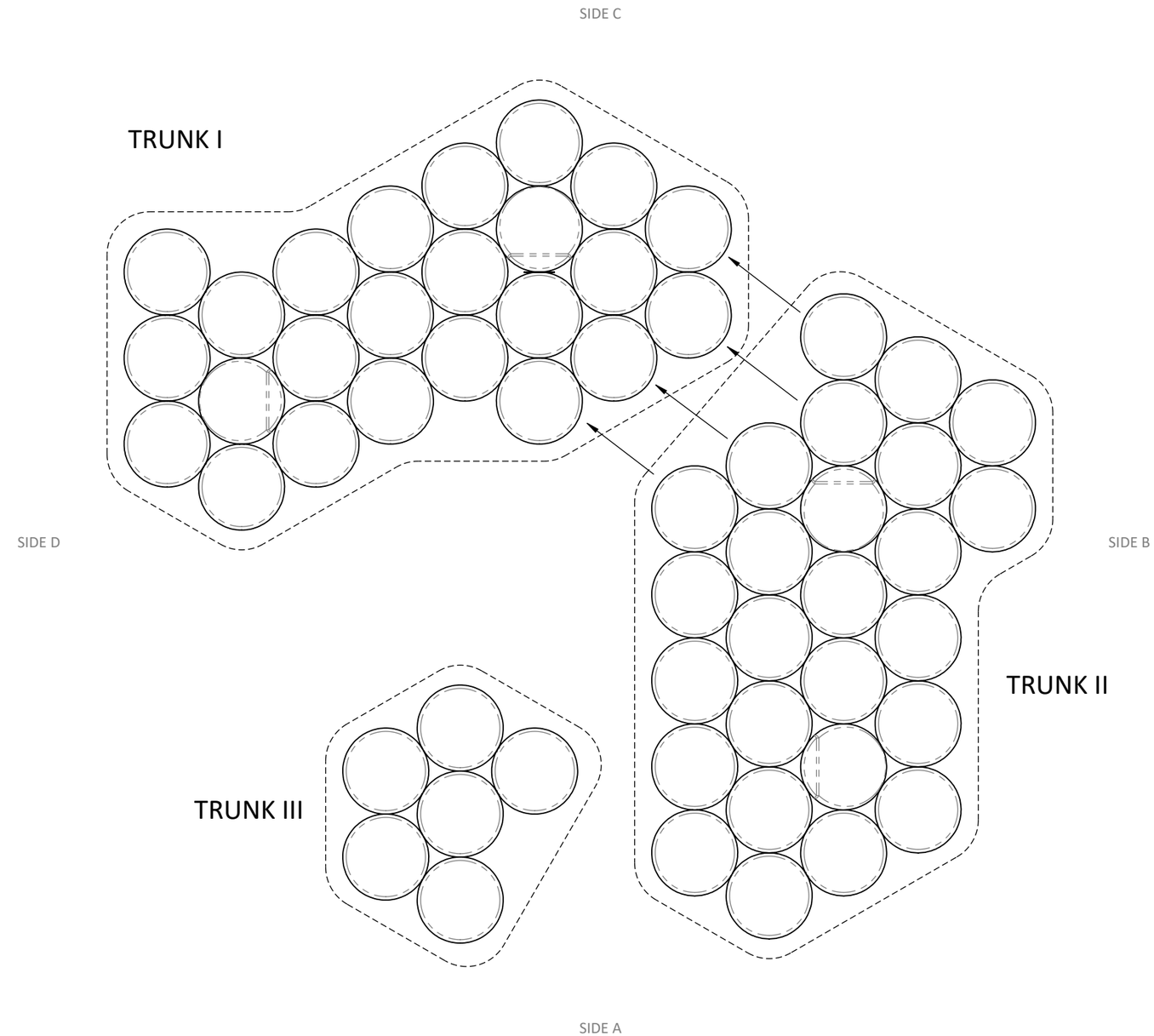

PROPERTY OF EARTHSCAPE PLAY INC. - DO NOT COPY. DO NOT DISTRIBUTE.

WHAT THE FINISHED PRODUCT LOOKS LIKE

Review the overall site layout (by others) to understand the locations and orietnation of the Stepper CLuster M4. The location of the Stepper CLuster M4 in relation to other site elements is not within the scope of these instructions and should be provided by others.

P01 is a poured-in-place concrete pad used to support and anchor Stepper Cluster M4. The concrete pad is to be provided by the installer if a suitable pad is not already provided.

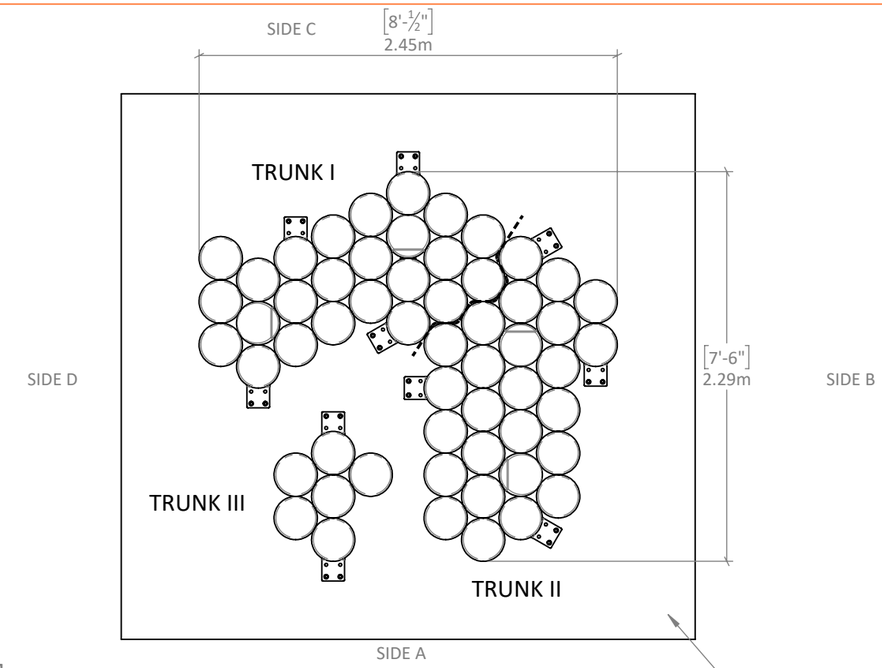

PLAN VIEW

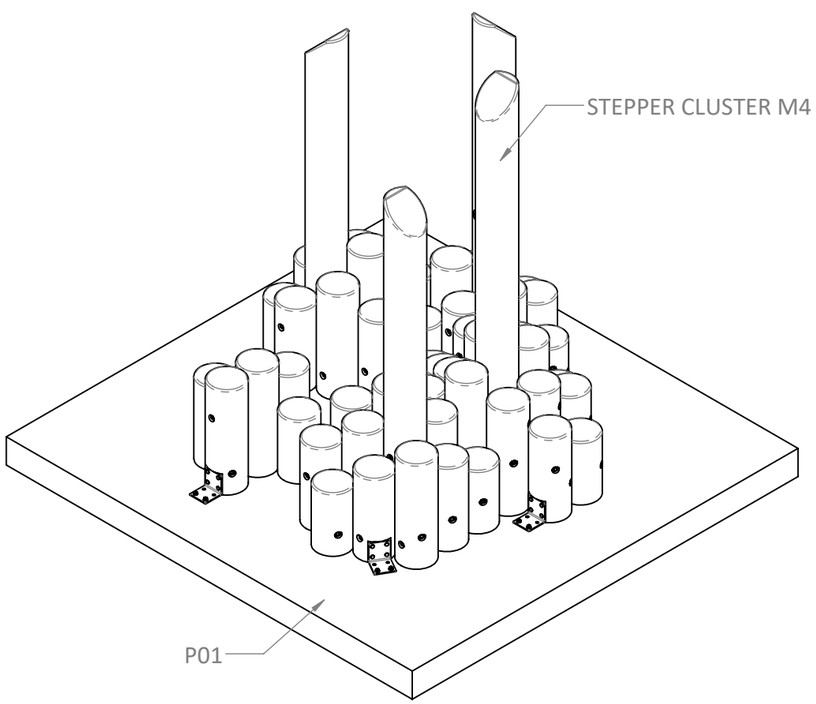

ISOMETRIC VIEW

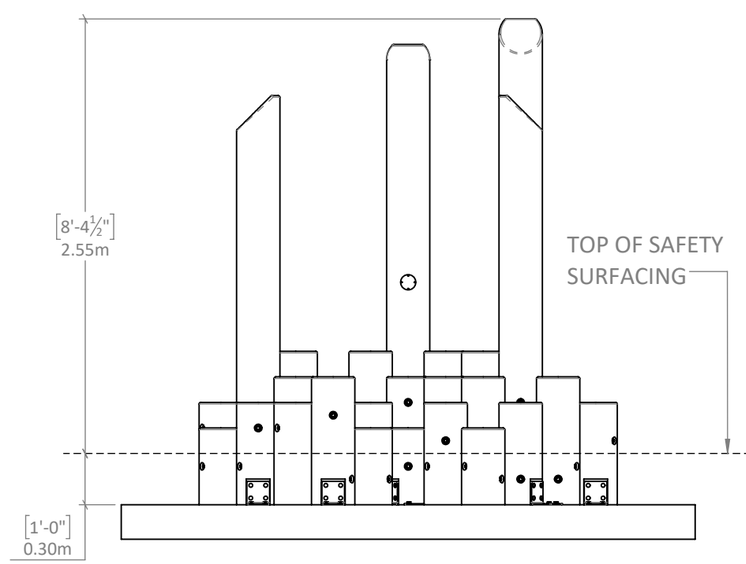

SIDE A

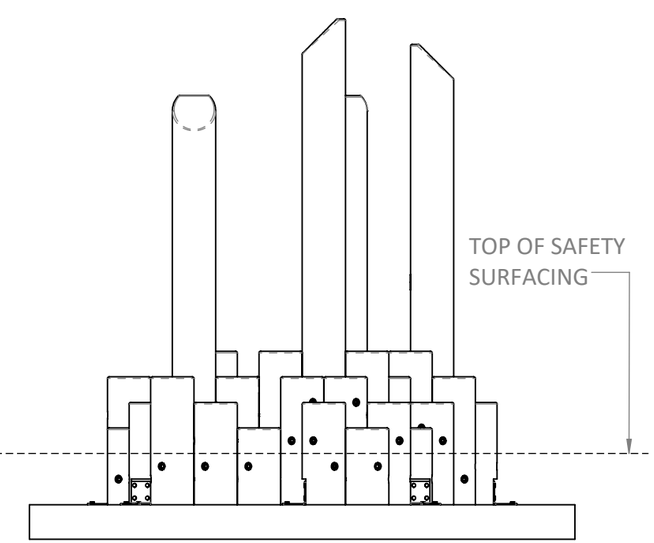

SIDE B

PROPERTY OF EARTHSCAPE PLAY INC. - DO NOT COPY. DO NOT DISTRIBUTE.

LOCATE PLAY EQUIPMENT

STEP 1 - LOCATING THE EQUIPMENT ON SITE

Lay out and mark the location of the the Stepper Cluster M4 Reference Points #1 & #2 on your site. The location of reference points relative to the site is not within the scope of these instructions and should be provided by others.

Reference Point #3 will be used only for final placement and anchoring of Trunk III and is provided here only for reference. See Sheet 12.

Ensure you know what the designed elevation is for the finished safety surface. All heights provided in these instructions will be relative to the finished safety surface. The finished surface elevation is not within the scope of these instructions and should be provided by others.

Ensure sufficient space is provided around Stepper Cluster M4 to maintain installation buffer as detailed in CSA or ASTM Specifications (sheet 2 & 3, as relevant to install location) when installed as a standalone unit.
Refer to project site plan when installed as a part of larger playground.

STEP 2 - LAYOUT CONCRETE PAD

Lay out and mark the outer edge of the concrete pad based off the dimensions provided in the Footing Plan View.

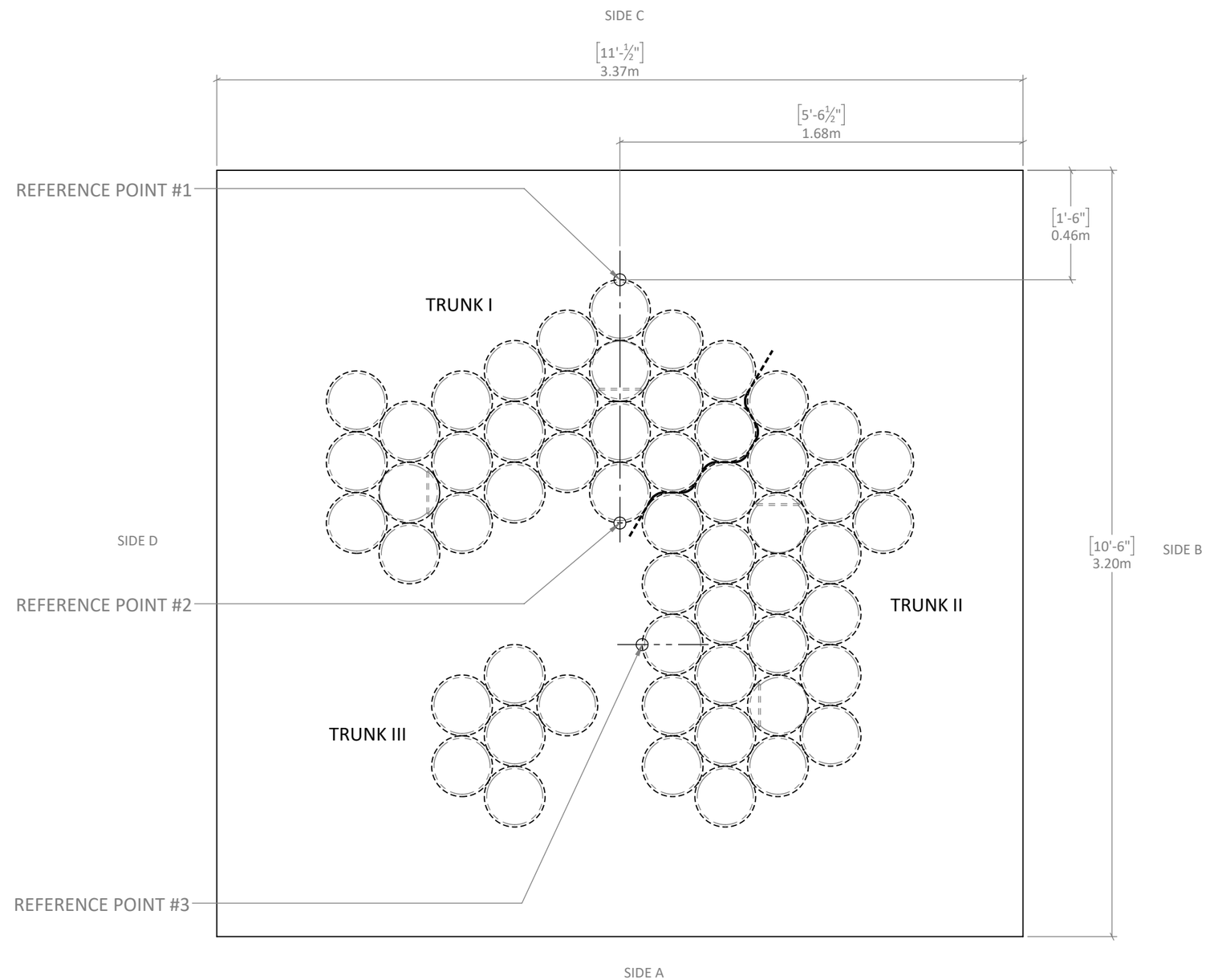

FOOTING PLAN VIEW

PROPERTY OF EARTHSCAPE PLAY INC. - DO NOT COPY. DO NOT DISTRIBUTE.

STEP 3 - EXCAVATE FOR CONCRETE PAD

Excavate area and prepare as per Concrete Placement Detail SD-001D on this sheet.

The foundation detail provided in these instructions has been developed assuming typical soil conditions specified in General Notes. If the subgrade encountered does not meet these conditions, the subgrade must be improved or revisions made to this detail. Revisions to the detail are the responsibility of the installer and it is strongly recommended any changes be reviewed and approved by a licensed professional engineer.

FOUNDATION NOTES:

1. SEE "GENERAL NOTES" SHEET FOR GENERAL NOTES.
2. TOP OF CONCRETE TO BE SET AT 300mm [12"] BELOW TOP OF SURFACING UNO.
3. SLAB TO BEAR ON MATERIAL BELOW THE FROST DEPTH, OR ALTERNATIVELY ON 300mm [12"] OF FREE DRAINING AGGREGATE, COMPACTED TO 98% SPDD.
4. CROSS SECTION ONLY. SEE PROJECT DRAWINGS FOR FOUNDATION SIZE, LAYOUT AND ADDITIONAL REBAR.

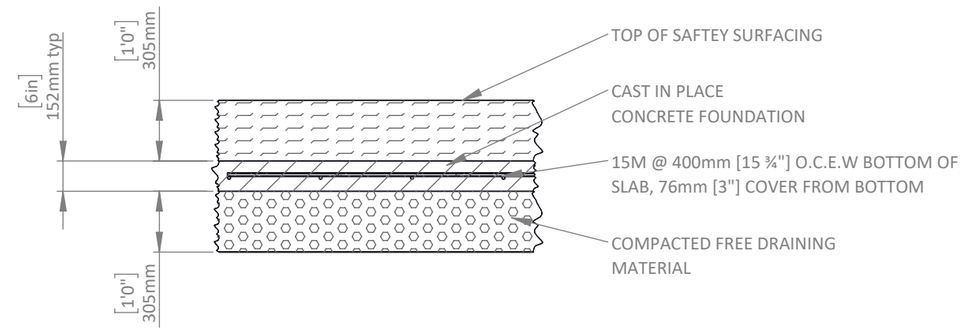

CONCRETE FOUNDATION DETAIL SD-001D

STEP 4 - POUR CONCRETE PAD

Pour concrete pad as per Concrete Placement Detail SD-001D on this sheet.
Ensure top of concrete is 300mm [12"] below finished safety surface.
Allow concrete to cure prior to proceeding to Step 5.

PROPERTY OF EARTHSCAPE PLAY INC. - DO NOT COPY. DO NOT DISTRIBUTE.

INSTALL DOCK BRACKETS

STEP 5 - INSTALL DOCK BRACKETS

Refer to Plan View drawing on this page for install positions of the Dock Brackets. Note the orientation and identify logs to receive Dock Brackets.

Identify the flat face cut into the base of indicated logs and install dock brackets such that the vertical of the dock bracket sits flush against it, with no portion protruding out from the uncut face of the log. The horizontal of the dock bracket should sit flush with the base of the Stepper Cluster L5 extending away from the log. See Detail A.

Fasten each dock bracket to the log using (4) Assy SK A2 8x100mm SS screws.

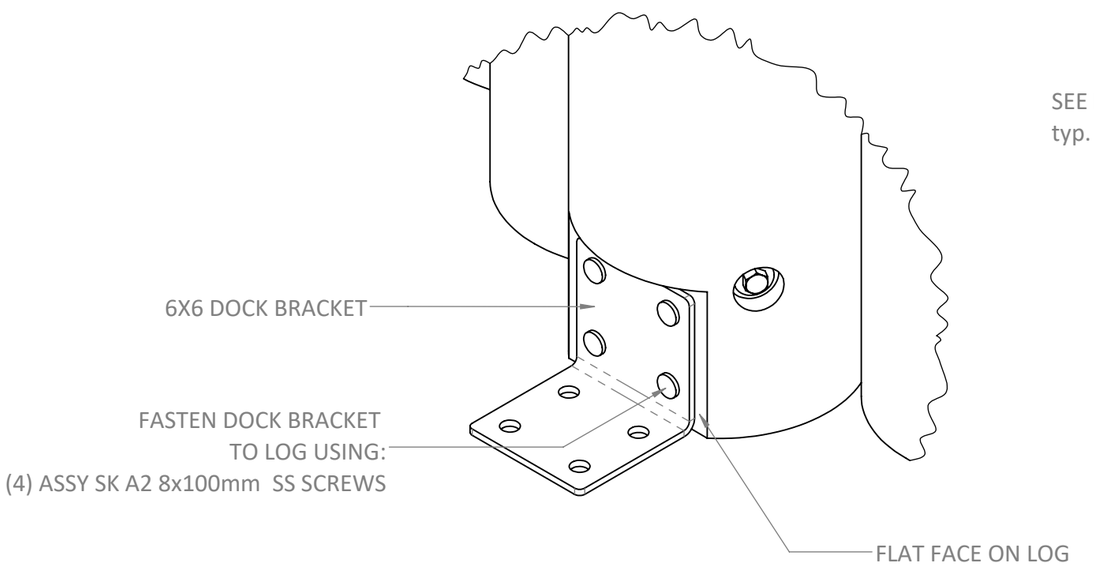

DETAIL A

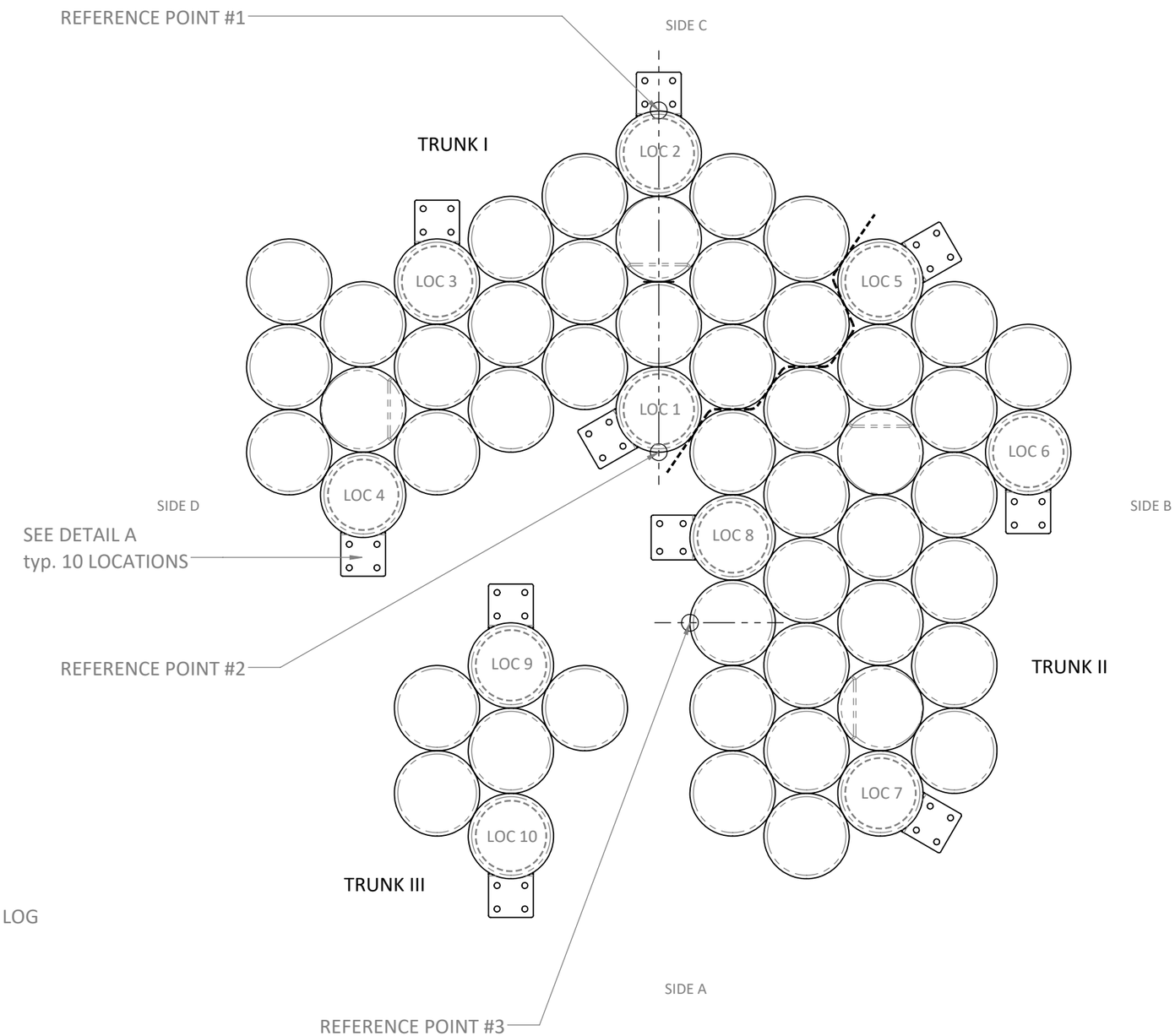

PLAN VIEW

PROPERTY OF EARTHSCAPE PLAY INC. - DO NOT COPY. DO NOT DISTRIBUTE.

SECURE STEPPER CLUSTER ON PAD

STEP 6 - SECURE STEPPER CLUSTER TO CONCRETE PAD

Ensure shipping dunnage has been removed from all Trunks.

Position the three Trunks of Stepper Cluster M4 on concrete pad P01 as per plan view on this sheet, using Reference Points marked on Stepper Cluster M4 and on site. Ensure Trunks I and II are as tightly aligned as possible.

Anchor the Dock Brackets to the concrete pad as per Detail B on this sheet. Total of 10 locations.

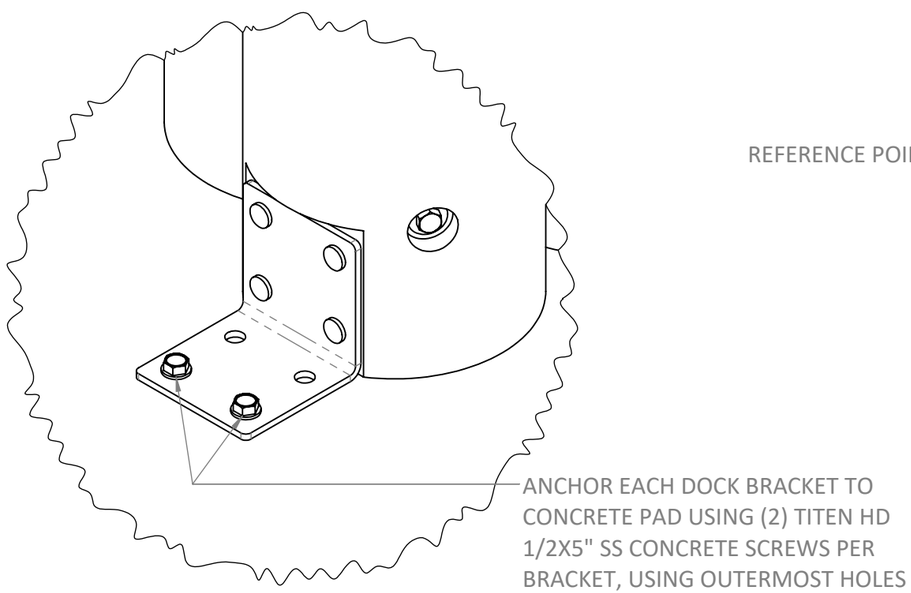

DETAIL B

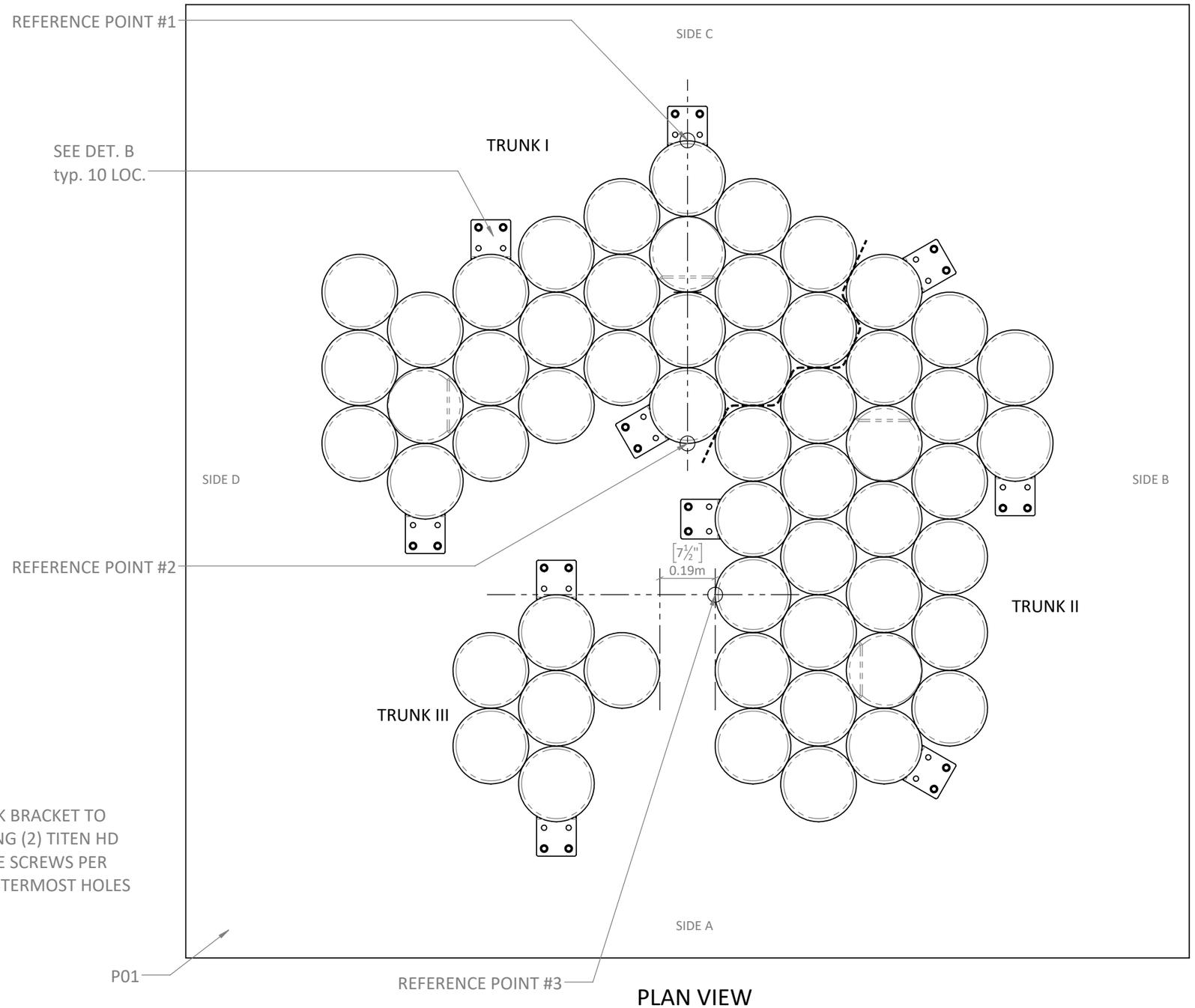

PLAN VIEW

PROPERTY OF EARTHSCAPE PLAY INC. - DO NOT COPY. DO NOT DISTRIBUTE.

GENERAL NOTES

STEPPER CLUSTER M4

FOR CANADIAN INSTALLATION SITES USE THESE NOTES

GENERAL NOTES

1. THIS DRAWING IS THE PROPERTY OF EARTHSCAPE. DO NOT COPY OR DISTRIBUTE WITHOUT PERMISSION.
2. EARTHSCAPE RESERVES OWNERSHIP OF ALL DRAWINGS, SPECIFICATIONS, AND OTHER DOCUMENTS, INCLUDING THOSE IN ELECTRONIC FORM, AUTHORED BY EARTHSCAPE. UPON SIGNING CONTRACT, EARTHSCAPE GRANTS THE OWNER LIMITED LICENSE TO USE THE INSTRUMENTS OF SERVICE SOLELY FOR USING AND MAINTAINING, OR ADDING TO THE PROJECT
3. ENGINEERING AND STRUCTURAL REVIEW: EARTHSCAPE PROVIDES STAMPED DRAWINGS AND/OR STRUCTURAL LOAD TESTING FOR ONTARIO, AS REQUIRED BY CSA Z614. LOCAL ENGINEERING APPROVAL FOR JURISDICTIONS OUTSIDE ONTARIO, IF REQUIRED, TO BE PROVIDED BY OTHERS.
4. EARTHSCAPE DESIGNS AND ENGINEERS FOR A FROST PENETRATION DEPTH OF 1200mm. SLAB ON GRADE CONSTRUCTION IS SUBJECT TO FROST MOVEMENTS. FREE DRAINING SOIL UNDER THE FOOTING IS USED TO MINIMIZE FROST EFFECTS. OVERALL TOWER/SLAB MOVEMENT MAY OCCUR.
5. INSPECTION AND TESTING: INSPECTION, TESTING (INCLUDING CONCRETE TESTING), PRE-CONSTRUCTION SURVEYS TO BE COMPLETED BY OTHERS.
6. SURFACING: WHEN AN IMPACT-ABSORBING SURFACE MATERIAL IS REQUIRED, IT MUST COMPLY WITH CSA Z614 (MOST RECENT EDITION) FOR THE DEFINED FALL HEIGHT OF THE EQUIPMENT SPECIFIED IN DRAWINGS BY EARTHSCAPE OR A CONTRACTUALLY OBLIGATED CRITICAL HEIGHT SPECIFIED IN ADVANCE. ENSURE USE ZONES, SAFETY ZONES, AND/OR PROTECTIVE SURFACING ZONES AROUND ALL PLAY EQUIPMENT ARE COMPLIANT WITH CSA Z614 (MOST RECENT EDITION) - BY OTHERS.
7. SURVEY AND FACILITIES: SURVEY WORK INCLUDING BENCHMARKS, LINES AND LEVELS, PRE-CONSTRUCTION SURVEY, AS-BUILT DRAWINGS BY OTHERS
8. THESE DRAWINGS ARE INTENDED TO BE PRINTED AT 11" X 17" PAGE SIZE. DO NOT SCALE
9. ALL MEASUREMENTS ARE IN METRES (m) UNLESS OTHERWISE STATED
10. EQUIPMENT SHALL COMPLY WITH THE REQUIREMENTS OF CAN/CSA-Z614 (MOST RECENT EDITION) "CHILDREN'S PLAYSPACES AND EQUIPMENT"
11. VISUAL DETAILS INCLUDING BUT NOT LIMITED TO: NET SPACING, ROPE APPEARANCE AND COLOURS ARE FOR CONCEPTUAL PURPOSES ONLY
12. ALWAYS WEAR PROPER PPE AND FOLLOW SAFE PRACTICES.
13. ALL WORK SHALL BE COMPLETED IN ACCORDANCE WITH THE OCCUPATIONAL HEALTH AND SAFETY ACT.
14. CONTRACTOR IS RESPONSIBLE FOR CONFIRMING ALL SITE CONDITIONS AND REPORTING DISCREPENCIES TO EARTHSCAPE IMMEDIATELY.
15. EARTHSCAPE IS NOT RESPONSIBLE FOR THIRD PARTY USE OF THESE DRAWINGS

FASTENERS:

1. METRIC/IMPERIAL DIAMETER CONVERSIONS OF TYPICAL SIZES:
    1. 8mm=5/16", 10mm=3/8", 12mm=1/2", 25mm=1"
    2. ROUND UP TO NEAREST STANDARD LENGTH FOR MANUFACTURER
2. ALL FASTENERS ARE TO BE STAINLESS STEEL (UNLESS OTHERWISE NOTED)
3. ALL BOLT HOLES SHALL BE PRE-DRILLED AND SHALL BE NOT LESS THAN 1mm AND NOT GREATER THAN 2mm LARGER THAN THE NOMINAL HOLE DIAMETER
4. FOR PARTIALLY THREADED SCREWS, EMBED FULL THREAD INTO SECONDARY MEMBER OR TO A DEPTH AS SPECIFIED ON DRAWINGS.
5. WHERE PRE-DRILLING OF SCREWS IS RECOMMENDED BY THE SCREW MANUFACTURER, HOLE DIAMETER TO BE STRICTLY AS PER MANUFACTURER'S INSTRUCTIONS.
6. DO NOT USE IMPACT DRILLS FOR SCREW INSTALLATION.
7. DO NOT USE A HAMMER TO ENGAGE THE FASTENER WITH THE WOOD.
8. ALL FASTENERS TO BE INSTALLED AS POSITIONED ON DRAWINGS.
9. ALL BOLTED CONNECTIONS ARE TO BE SECURED USING VIBRA-TITE "VC-3" THREAD-LOCKING FLUID OR EQUIVILENT

EXCAVATION AND BACKFILL

1. STRIP ALL TOP SOIL, PAVING, AND DELETERIOUS MATERIAL FROM UNDER FOOTINGS.
2. LOCATE ALL SERVICES PRIOR TO COMPLETING EXCAVATION.
3. ALL FOOTINGS SHALL BE PLACED AT A MINIMUM OF 1200mm BELOW GRADE UNLESS OTHERWISE NOTED ON THE DRAWINGS.
4. SUPPORTING SUBGRADE AND FILL TO HAVE A MINIMUM BEARING CAPACITY OF 150 kPa.
5. ALL FOOTINGS AND SLABS TO BE PLACED ON EITHER NATIVE GRAVEL/SAND/CLAY OR 150mm OF GRANULAR A COMPACTED TO A MINIMUM STANDARD PROCTOR DRY DENSITY OF 98%.
6. BENEATH 150mm TOP LAYER OF COMPACTED GRANULAR A, GRANULAR B FILL CAN BE USED AS REQUIRED PLACED IN MAXIMUM 200mm LIFTS, COMPACTED TO A STANDARD PROCTOR DRY DENSITY OF 96%.
7. CONTRACTOR IS RESPONSIBLE FOR SUPPORT OF EXCAVATIONS DURING CONSTRUCTION AS REQUIRED.

CONCRETE

1. ALL CONCRETE WORK AND MATERIALS SHALL BE IN ACCORDANCE WITH CAN/CSA A23.1/2
2. ALL REINFORCING STEEL TO BE IN ACCORDANCE WITH CAN/CSA A23.1/2 INCLUDING FABRICATION, DETAILING, LAP SPLICES, PLACEMENT, FIXING AND COVER.
3. REINFORCING STEEL SHALL COMPLY WITH CAN/CSA G40.18
4. DO NOT ADD WATER TO CONCRETE ONSITE.
5. ENSURE A MINIMUM COVER OF 75mm TO THE GROUND IN ALL BELOW GRADE CONCRETE.
6. CONCRETE MATERIAL TO BE:
    1. FOOTINGS: CLASS F-2 CONCRETE WITH A MINIMUM 28 DAY COMPRESSIVE STRENGTH OF 25 MPa, MAXIMUM WATER/CEMENT RATIO OF 0.55, MAXIMUM COARSE AGGREGATE SIZE OF 20mm, 4-7% AIR CONTENT, AND A MAXIMUM SLUMP OF 50-100mm.
    2. SLAB ON GRADE: CLASS C-2 CONCRETE WITH A MINIMUM 28 DAY COMPRESSIVE STRENGTH OF 32 MPa, MAXIMUM WATER/CEMENT RATIO OF 0.45, MAXIMUM COARSE AGGREGATE SIZE OF 20mm, 5-8% AIR CONTENT AND A MAXIMUM SLUMP OF 50-100mm.
7. CONCRETE REINFORCING TO DEFORMED MINIMUM YIELD STRENGTH OF 400 MPa
8. PIT RUN GRAVEL WILL NOT BE ACCEPTABLE.
9. ALL REINFORCING CHAIRS SHALL BE PLASTIC
10. ALL FORM OIL TO BE NON-STAINING MINERAL OIL, FREE OF KEROSENE.
11. WELDED WIRE MESH SHALL BE IN ACCORDANCE WITH ASTM A1064.
12. VIBRATE ALL CONCRETE TO ENSURE THAT CONCRETE IS FREE FROM VOIDS AND OTHER DEFECTS.
13. MOIST CURE ALL CONCRETE 7 DAYS.
14. IN HOT OR COLD WEATHER CONDITIONS TAKE ADDITIONAL PRECAUTIONS AS PER CAN/CSA A23.1/2.
15. UNLESS NOTED OTHERWISE, FASTEN ALL HARDWARE TO CONCRETE USING EITHER:
    1. SIMPSON STRONG TIE "TITEN HD" Ø½ X 5" SS CONCRETE SCREW
    2. THREADED ROD WITH SIMPSON STRONG TIE "SET 3G" OR HILTI "HY-200" EPOXY.
    3. REFER TO RESPECTIVE MANUFACTURER's INSTRUCTIONS FOR INSTALLATION PROCEDURE

FOR U.S. INSTALLATION SITES USE THESE NOTES

GENERAL NOTES

1. THIS DRAWING IS THE PROPERTY OF EARTHSCAPE. DO NOT COPY OR DISTRIBUTE WITHOUT PERMISSION.
2. EARTHSCAPE RESERVES OWNERSHIP OF ALL DRAWINGS, SPECIFICATIONS, AND OTHER DOCUMENTS, INCLUDING THOSE IN ELECTRONIC FORM, AUTHORED BY EARTHSCAPE. UPON SIGNING CONTRACT, EARTHSCAPE GRANTS THE OWNER LIMITED LICENSE TO USE THE INSTRUMENTS OF SERVICE SOLELY FOR USING AND MAINTAINING, OR ADDING TO THE PROJECT
3. ENGINEERING AND STRUCTURAL REVIEW: EARTHSCAPE PROVIDES STAMPED DRAWINGS AND/OR STRUCTURAL LOAD TESTING FOR ONTARIO, AS REQUIRED BY ASTM F-1487-17. LOCAL ENGINEERING APPROVAL FOR JURISDICTIONS OUTSIDE ONTARIO, IF REQUIRED, TO BE PROVIDED BY OTHERS.
4. EARTHSCAPE DESIGNS AND ENGINEERS FOR A FROST PENETRATION DEPTH OF 48". SLAB ON GRADE CONSTRUCTION IS SUBJECT TO FROST MOVEMENTS. FREE DRAINING SOIL UNDER THE FOOTING IS USED TO MINIMIZE FROST EFFECTS. OVERALL TOWER/SLAB MOVEMENT MAY OCCUR.
5. INSPECTION AND TESTING: INSPECTION, TESTING (INCLUDING CONCRETE TESTING), PRE-CONSTRUCTION SURVEYS TO BE COMPLETED BY OTHERS.
6. SURFACING: WHEN AN IMPACT-ABSORBING SURFACE MATERIAL IS REQUIRED, IT MUST COMPLY WITH ASTM F-1292 (MOST RECENT EDITION) FOR THE DEFINED FALL HEIGHT OF THE EQUIPMENT SPECIFIED IN DRAWINGS BY EARTHSCAPE OR A CONTRACTUALLY OBLIGATED CRITICAL HEIGHT SPECIFIED IN ADVANCE. ENSURE USE ZONES, SAFETY ZONES, AND/OR PROTECTIVE SURFACING ZONES AROUND ALL PLAY EQUIPMENT ARE COMPLIANT WITH ASTM F-1292 (MOST RECENT EDITION) - BY OTHERS.
7. SURVEY AND FACILITIES: SURVEY WORK INCLUDING BENCHMARKS, LINES AND LEVELS, PRE-CONSTRUCTION SURVEY, AS-BUILT DRAWINGS BY OTHERS
8. THESE DRAWINGS ARE INTENDED TO BE PRINTED AT 11" X 17" PAGE SIZE. DO NOT SCALE
9. ALL MEASUREMENTS ARE IN FEET-INCHES UNLESS OTHERWISE STATED
10. EQUIPMENT SHALL COMPLY WITH THE REQUIREMENTS OF ASTM F1487-17 "STANDARD CONSUMER SAFETY PERFORMANCE SPECIFICATION FOR PLAYGROUND EQUIPMENT"
11. VISUAL DETAILS INCLUDING BUT NOT LIMITED TO: NET SPACING, ROPE APPEARANCE AND COLOURS ARE FOR CONCEPTUAL PURPOSES ONLY
12. ALWAYS WEAR PROPER PPE AND FOLLOW SAFE PRACTICES.
13. ALL WORK SHALL BE COMPLETED IN ACCORDANCE WITH THE OCCUPATIONAL HEALTH AND SAFETY ACT.
14. CONTRACTOR IS RESPONSIBLE FOR CONFIRMING ALL SITE CONDITIONS AND REPORTING DISCREPENCIES TO EARTHSCAPE IMMEDIATELY.
15. EARTHSCAPE IS NOT RESPONSIBLE FOR THIRD PARTY USE OF THESE DRAWINGS

FASTENERS

1. METRIC/IMPERIAL DIAMTER CONVERSIONS:
    1. 8mm=5/16", 10mm=3/8", 12mm=1/2", 25mm=1"
    2. ROUND UP TO NEAREST STANDARD LENGTH FOR MANUFACTURER
2. ALL FASTENERS ARE TO BE STAINLESS STEEL (UNLESS OTHERWISE NOTED)
3. ALL BOLT HOLES SHALL BE PRE-DRILLED AND SHALL BE NOT LESS THAN 3/64" AND NOT GREATER THAN 5/64" LARGER THAN THE NOMINAL HOLE DIAMETER
4. FOR PARTIALLY THREADED SCREWS, EMBED FULL THREAD INTO SECONDARY MEMBER OR TO A DEPTH AS SPECIFIED ON DRAWINGS.
5. WHERE PRE-DRILLING OF SCREWS IS RECOMMENDED BY THE SCREW MANUFACTURER, HOLE DIAMETER TO BE STRICTLY AS PER MANUFACTURER'S RECOMMENDATIONS.
6. DO NOT USE IMPACT DRILLS FOR SCREW INSTALLATION.
7. DO NOT USE A HAMMER TO ENGAGE THE FASTENER WITH THE WOOD.
8. ALL FASTENERS TO BE INSTALLED AS POSITIONED ON SHOP DRAWINGS.
9. ALL BOLTED CONNECTIONS ARE TO BE SECURED USING VIBRA-TITE "VC-3" THREAD-LOCKING FLUID OR EQUIVILENT

EXCAVATION AND BACKFILL

1. STRIP ALL TOP SOIL, PAVING, AND DELETERIOUS MATERIAL FROM UNDER FOOTINGS.
2. LOCATE ALL SERVICES PRIOR TO COMPLETING EXCAVATION.
3. ALL FOOTINGS SHALL BE PLACED AT A MINIMUM OF 4' BELOW GRADE UNLESS OTHERWISE NOTED ON THE DRAWINGS.
4. SUPPORTING SUBGRADE AND FILL TO HAVE A MINIMUM BEARING CAPACITY OF 3000PSF.
5. ALL FOOTINGS AND SLABS TO BE PLACED ON EITHER NATIVE GRAVEL/SAND/CLAY OR 6" OF GRANULAR A COMPACTED TO A MINIMUM STANDARD PROCTOR DRY DENSITY OF 98%.
6. BENEATH 6" TOP LAYER OF COMPACTED GRANULAR A, GRANULAR B FILL CAN BE USED AS REQUIRED PLACED IN MAXIMUM 8" LIFTS, COMPACTED TO A STANDARD PROCTOR DRY DENSITY OF 96%.
7. CONTRACTOR IS RESPONSIBLE FOR SUPPORT OF EXCAVATIONS DURING CONSTRUCTION AS REQUIRED.

CONCRETE

1. ALL CONCRETE WORK AND MATERIALS SHALL BE IN ACCORDANCE WITH ACI-301
2. ALL REINFORCING STEEL TO BE IN ACCORDANCE WITH ASTM A615 AND ACI-301 INCLUDING FABRICATION, DETAILING, LAP SPLICES, PLACEMENT, FIXING AND COVER.
3. REINFORCING STEEL SHALL COMPLY WITH ASTM A615
4. DO NOT ADD WATER TO CONCRETE ONSITE.
5. ENSURE A MINIMUM COVER OF 3" TO THE GROUND IN ALL BELOW GRADE CONCRETE.
6. CONCRETE MATERIAL TO BE:
    1. FOOTINGS AND SLABS: CONCRETE WITH A MINIMUM 28 DAY COMPRESSIVE STRENGTH OF 4000 PSI, MAXIMUM WATER/CEMENT RATIO OF 0.50, MAXIMUM COARSE AGGREGATE SIZE OF 3/4", 4-7% AIR CONTENT (WHERE CONCRETE PLACED ABOVE FROST), AND A MAXIMUM SLUMP OF 2 - 4 INCHES.
7. CONCRETE REINFORCING TO DEFORMED MINIMUM YIELD STRENGTH OF 58000 PSI
8. PIT RUN GRAVEL WILL NOT BE ACCEPTABLE.
9. ALL REINFORCING CHAIRS SHALL BE PLASTIC
10. ALL FORM OIL TO BE NON-STAINING MINERAL OIL, FREE OF KEROSENE.
11. WELDED WIRE MESH SHALL BE IN ACCORDANCE WITH ASTM A1064.
12. VIBRATE ALL CONCRETE TO ENSURE THAT CONCRETE IS FREE FROM VOIDS AND OTHER DEFECTS.
13. MOIST CURE ALL CONCRETE 7 DAYS.
14. IN HOT OR COLD WEATHER CONDITIONS TAKE ADDITIONAL PRECAUTIONS AS PER ACI 305 OR 306 RESPECTIVELY.
15. UNLESS NOTED OTHERWISE, FASTEN ALL HARDWARE TO CONCRETE USING EITHER:
    1. SIMPSON STRONG TIE "TITEN HD" Ø½ X 5" SS CONCRETE SCREW
    2. THREADED ROD WITH SIMPSON STRONG TIE "SET 3G" OR HILTI "HY-200" EPOXY
    3. REFER TO RESPECTIVE MANUFACTURER'S INSTRUCTIONS FOR INSTALLATION PROCEDURE

PROPERTY OF EARTHSCAPE PLAY INC. - DO NOT COPY. DO NOT DISTRIBUTE.

INSTALLATION INSTRUCTIONS

EARTHSCAPE COLLECTIONS

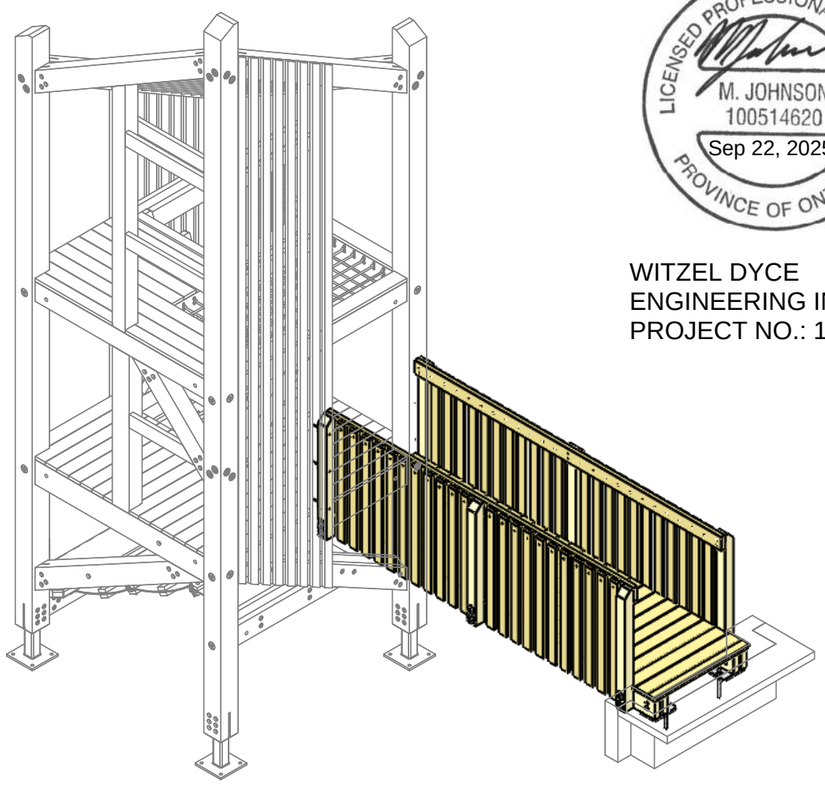

LICENSED PROFESSIONAL ENGINEER
M. JOHNSON
100514620
Sep 22, 2025
PROVINCE OF ONTARIO

WITZEL DYCE
ENGINEERING INC.
PROJECT NO.: 12936-165

MODIFIED TIMBER BRIDGE 12'

THESE INSTRUCTIONS APPLY TO THE FOLLOWING VERSIONS OF THIS PRODUCT:

1209039 - MODIFIED TIMBER BRIDGE 12'

PROJECT NUMBER: ESC0499
DESIGNED FOR: HURLD PARK
TO BE INSTALLED IN: WOBURN, MA

NOTE: COLOURS SHOWN ARE REPRESENTATIONAL AND MAY NOT BE THE SAME AS THOSE OF THE SUPPLIED PRODUCT

FOR CSA AND ASTM SPECIFICATIONS AND GENERAL NOTES SEE MAIN STRUCTURE INSTALLATION PACKAGE

DATE DOCUMENT RELEASED 2025-09-18
DOCUMENT NUMBER: 1209450-R1

PROPERTY OF EARTHSCAPE PLAY INC. - DO NOT COPY. DO NOT DISTRIBUTE.

PLEASE READ ALL INSTRUCTIONS

Before starting to install this equipment be sure to read through and understand these instructions.

If you have any questions, contact your Earthscape Representative for assistance before proceeding.

MEASUREMENTS AND STANDARDS

Measurements have been provided in both metres and [feet-inches]. Ensure to follow standards noted for the location in which this play equipment is being installed. Those marked CSA are to be used in Canada and those marked ASTM to be used in the United States.

LIST OF ABBREVIATIONS

AYC = Alaskan Yellow Cedar
WRC = Western Red Cedar
DPS = Designated Play Surface
SS = Stainless Steel
HDG = Hot Dipped Galvanized
WWM = Welded Wire Mesh
TYP = Typical
C/W = Complete With
UNO = Unless Noted Otherwise
EWF = Engineered Wood Fiber
PIP = Poured-In-Place Rubber Surfacing
PT = Pressure Treated

TOOLS SUPPLIED WITH THIS PRODUCT

- No tools supplied

TOOLS THE INSTALLER NEEDS TO SUPPLY

- High torque drill
- Set of wood drill bits up to 1/2"
- T25 drive bit
- T40 drive bit
- Circular saw
- 1/2" Impact driver
- Socket set up to 1-1/8"
- Hammer Drill
- Concrete drill bit set up to and including size required by epoxy manufacturer to set 3/4" threaded rod 8" deep in concrete abutment
- Angle grinder (With course 24 grit sanding disks and metal cut off disks
- Transit or laser Level
- Rigging and lifting straps

EQUIPMENT THE INSTALLER NEEDS TO SUPPLY

- Machine to lift and position 400 kg [870 lb] pre-assembled wooden bridge.

INSTALLER CREW AND TIME REQUIRED

Number of people needed: 3
Typical total person-hours to install: 3

Time breakdown:
- 1 hours x 3 people to position and anchor the bridge in place

MATERIALS THE INSTALLER NEEDS TO SUPPLY

- Epoxy - Simpson Strong Tie "Set 3G" or Hilti "Hy-200"

WARNINGS

These instructions do not provide specific guidance on the use of tools or the lifting and moving heavy objects. It is assumed that competent people are installing this product who are familiar with using the tools and equipment required and are knowledgeable and skilled at lifting and positioning heavy objects.

PROPERTY OF EARTHSCAPE PLAY INC. - DO NOT COPY. DO NOT DISTRIBUTE.

MAKE SURE YOU HAVE ALL THE PARTS

Examine the equipment and ensure you have all the required parts listed in the table below.

PART IMAGE	ITEM NO.	PART NO.	DESCRIPTION	QTY.
SEE IMAGE THIS SHEET	1	1209039	PRE-ASSEMBLED MODIFIED WOODEN BRIDGE 12'	1
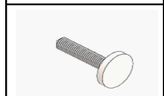	2	H16685	WOOD SCREW, WASHER HEAD M8X100, SS	4
	3	H16687	WOOD SCREW, WASHER HEAD M8X200, SS	6
	4	H20028	THREADED STUD 3/4"X 12" HDG	2
	5	H30080	WASHER 3/4" X 2" HDG	2
	6	H40046	HEX NUT 3/4-10 HDG	4

IMAGES OF FASTENERS IN THIS TABLE ARE REPRESENTATIONAL TO HELP IDENTIFY PARTS.

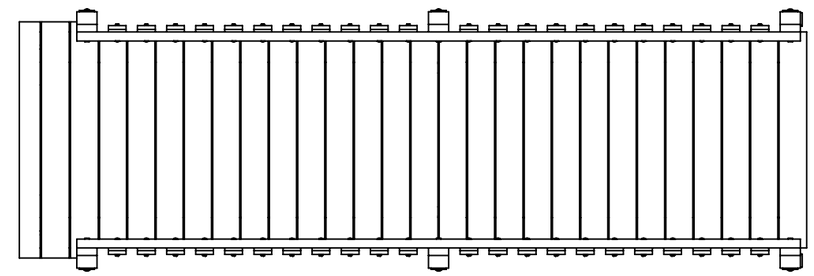

PLAN VIEW

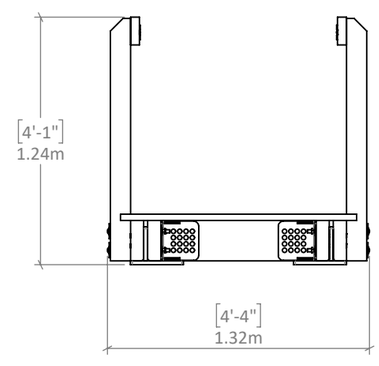

FRONT VIEW

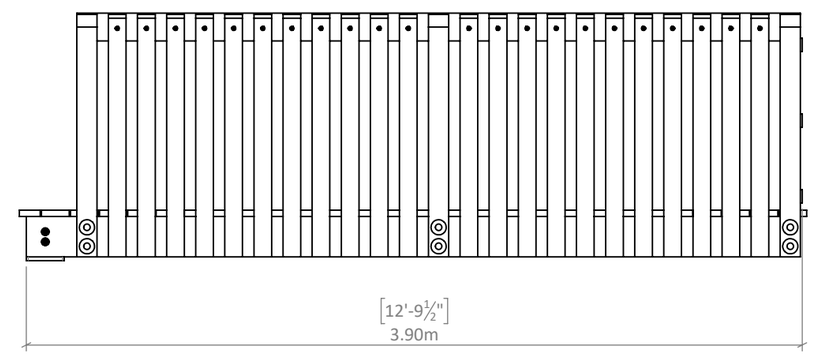

SIDE VIEW

TIMBER BRIDGE SHIPPED PRE-ASSEMBLED AS SHOWN
WEIGHT: 400 KG [870 LB]

PROPERTY OF EARTHSCAPE PLAY INC. - DO NOT COPY. DO NOT DISTRIBUTE.

ABUTMENT DETAILS

ABUTMENT DETAILS OVERVIEW

Before installing the bridge ensure the concrete abutment is cured and matches the specifications shown on this sheet.

Concrete to be provided by installer.

REACTION LOADS

- DL = 250 lbs
- LL = 900 lbs
- Playground loading = 1500 lbs (not to be considered with live load
- SL = 650 lbs
- WL = 625 lbs (perp to bridge)
- EQ = 75 lbs (perp to bridge)

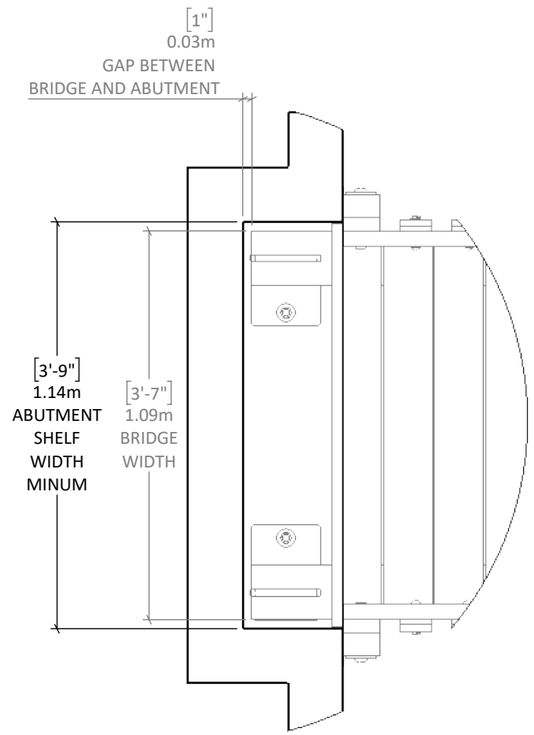

DETAIL A

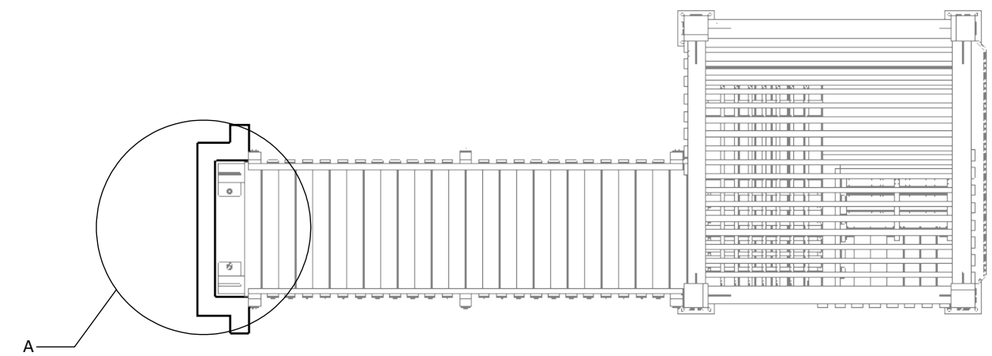

ABUTMENT PLAN VIEW

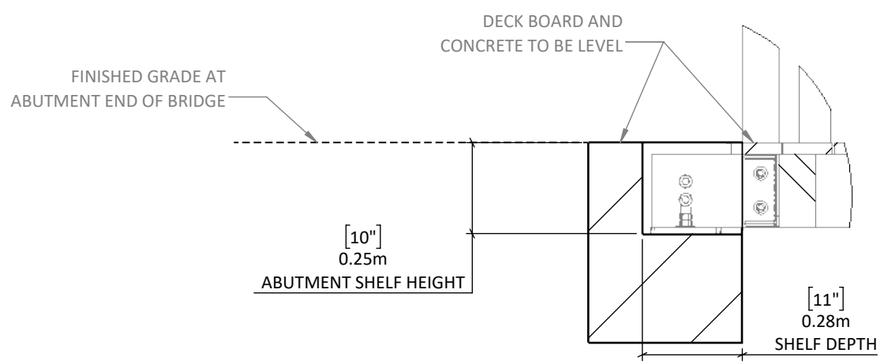

DETAIL B

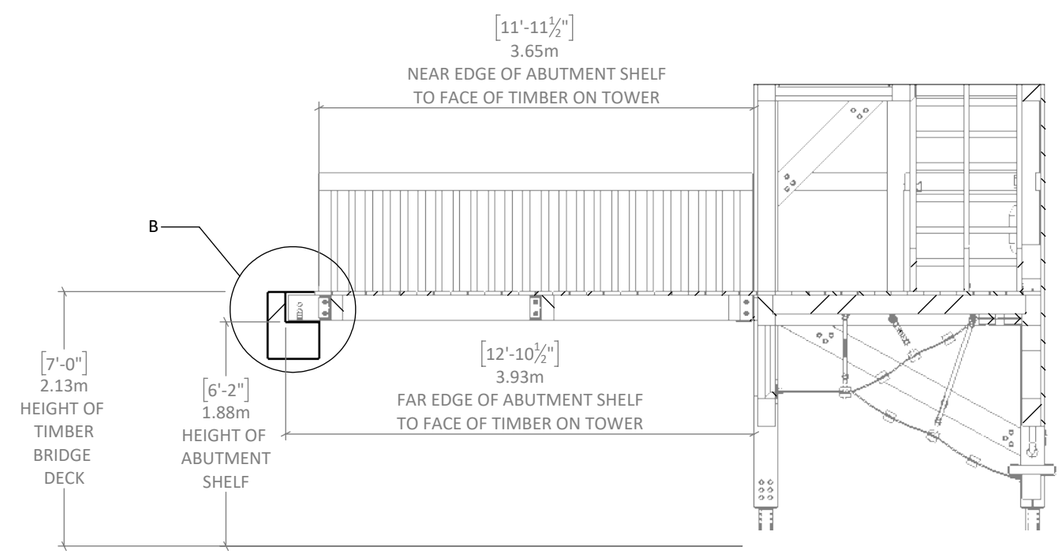

ABUTMENT LOCATION

PROPERTY OF EARTHSCAPE PLAY INC. - DO NOT COPY. DO NOT DISTRIBUTE.

PREP BRIDGE AND TOWER

MODIFIED TIMBER BRIDGE 12'

STEP 1 - CONFIRM WHERE THE ACCESSORY IS TO BE INSTALLED

Review the complete tower installation package to determine on which side this accessory is to be installed and what the finished product should look like.

STEP 2 - INSTALL BRIDGE PRIOR TO ANCHORING TOWERS TO FOUNDATION PAD

It might be necessary to make minor adjustments the position of the timber tower to suit the as-built bridge. Anchor tower after bridge has been installed. Ensure the tower opening is centered on the opening of the abutment, also the tower is parallel to the abutment face.

STEP 3 - PREP BRIDGE

Temporarily remove the end deckboards from both ends of bridge as per Figure 1. Make sure to note which end they came from and their orientation.

STEP 4 - ATTACH THE BRIDGE BRACKET TO TOWER

Attach the bridge bracket to the timber tower as shown in Section H-H.

STEP 5 - CONFIRM GAP BETWEEN TOWER AND ABUTMENT

Measure distance between the tower and the abutment concrete and compare to supplied bridge length. Pull tower away from concrete enough to be able to fit bridge between.

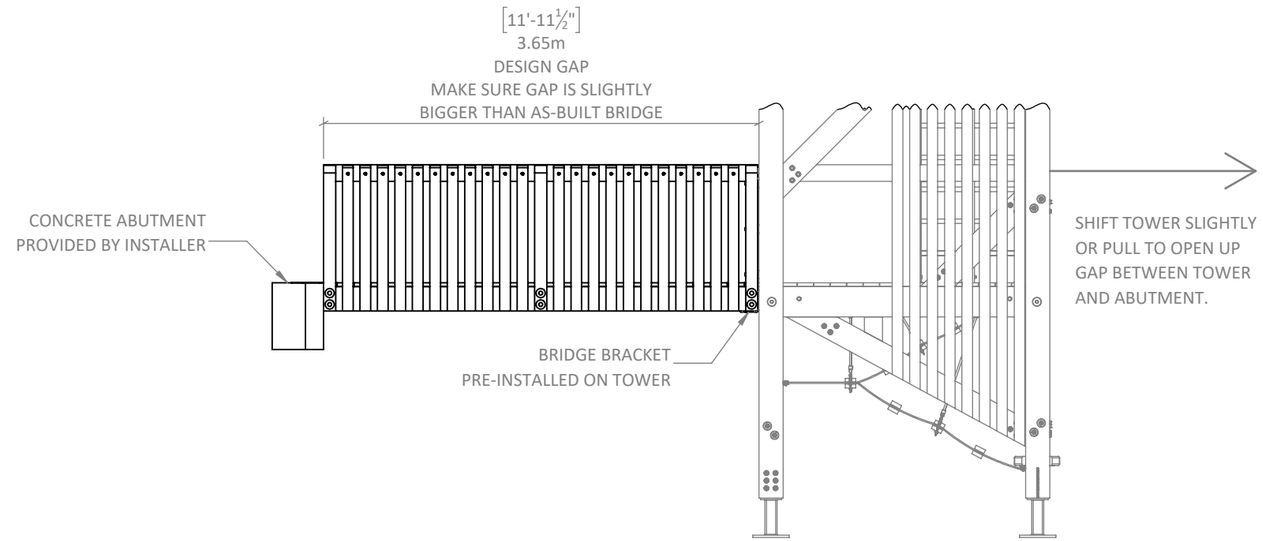

SIDE ELEVATION

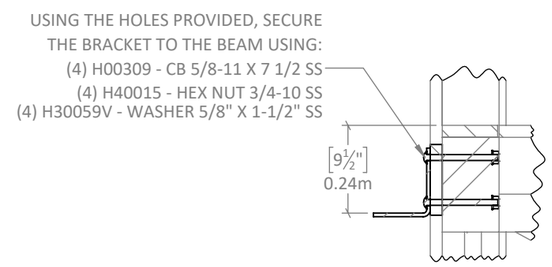

SECTION H-H

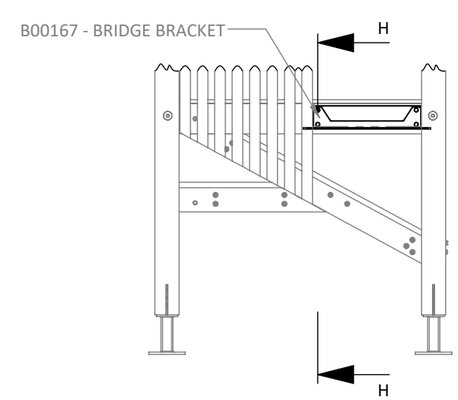

FRONT ELEVATION

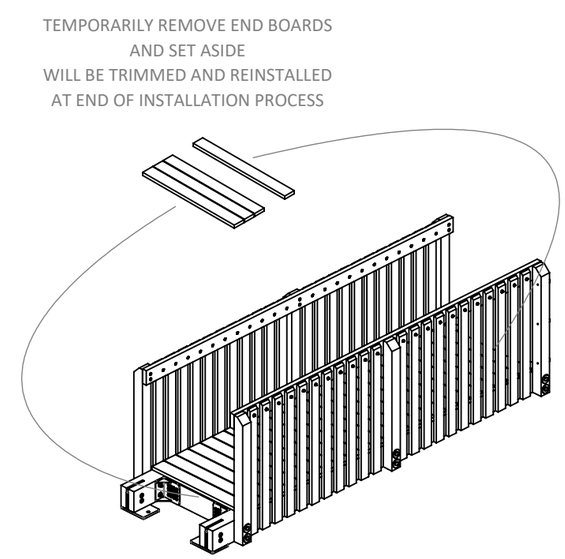

FIGURE 1

PROPERTY OF EARTHSCAPE PLAY INC. - DO NOT COPY. DO NOT DISTRIBUTE.

LIFT AND PLACE BRIDGE

MODIFIED TIMBER BRIDGE 12'

STEP 6 - LIFT AND PLACE BRIDGE

Lift bridge with appropriate equipment and move into position. Lower bridge on to the tower bracket and the concrete abutment. Ensure the bridge is centered in the tower opening and centered in the concrete abutment.

STEP 7 - ADJUST POSITION OF TOWERS

Draw the tower so the end of the bridge is tight to the tower and the bridge is sitting on the abutment. Ensure a gap is present from the end of the bridge to the concrete as shown in the plan view.

Make minor adjustments to the tower position to ensure both ends of the bridge are centered in the tower opening and the concrete abutment. Ensure the tower is tight to the end of the bridge.

STEP 8 - SECURE BRIDGE GUARDRAIL POSTS

Install screws through pre-drilled holes in the end guardrail posts into timber tower posts.

Pre-drill all screw holes as per general notes.

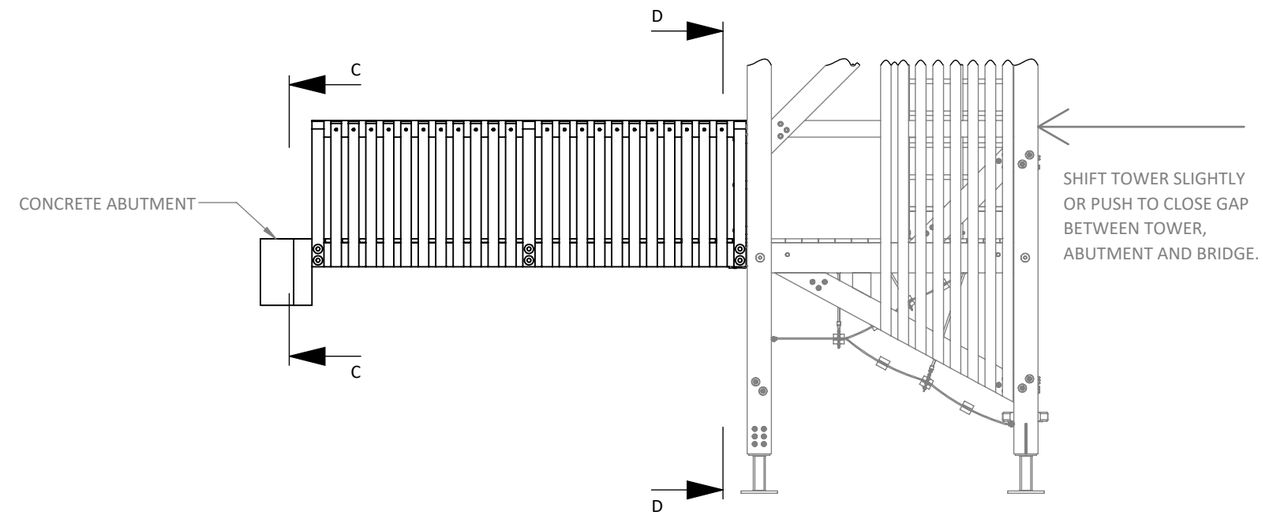

SIDE ELEVATION

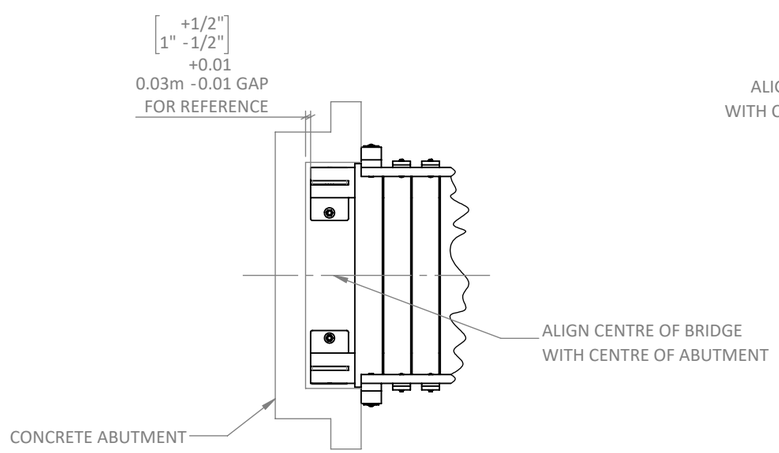

PLAN VIEW

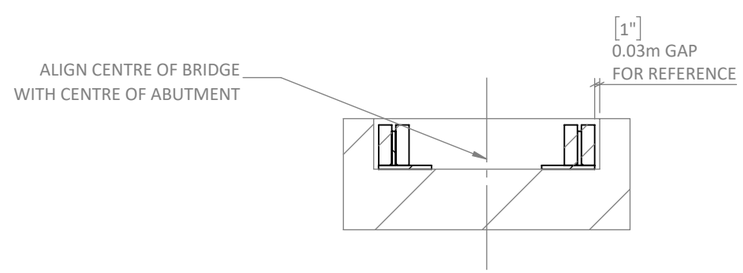

SECTION C-C
ABUTMENT SIDE

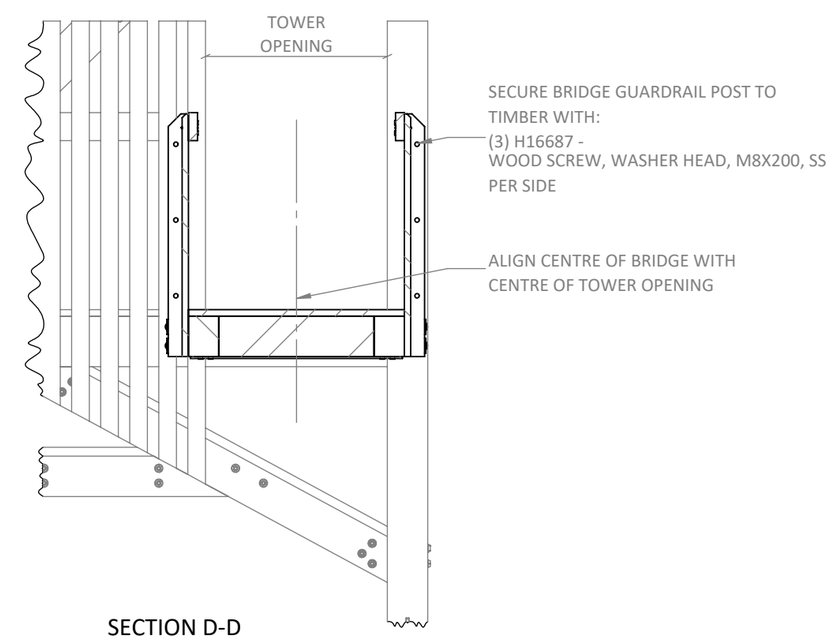

SECTION D-D
TOWER SIDE

PROPERTY OF EARTHSCAPE PLAY INC. - DO NOT COPY. DO NOT DISTRIBUTE.

STEP 9 - SECURE BRIDGE STRINGERS

Install screws through bottom of steel brackets into underside of bridge timber stringers.

Pre-drill all screw holes as per general notes in main installation package.

STEP 10 - SECURE BRIDGE TO ABUTMENT

Install threaded rod into concrete using epoxy, see general notes in the main installation package epoxy details. Cut and grind the top of the threaded rod after installation to ensure max two threads exposed.

Ensure a minimum threaded rod embedment depth of 6".

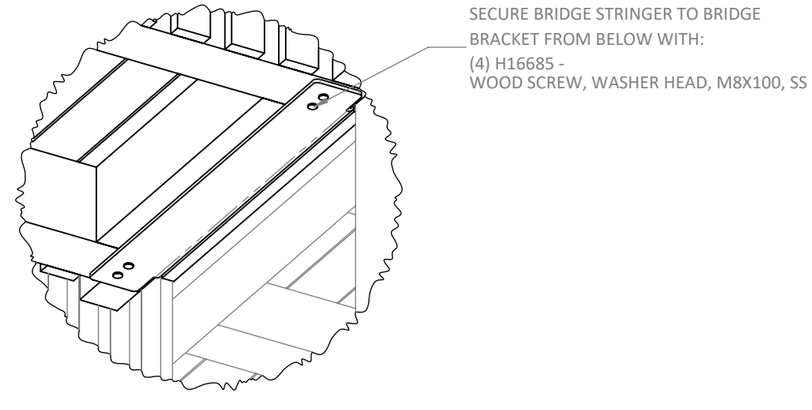

DETAIL E

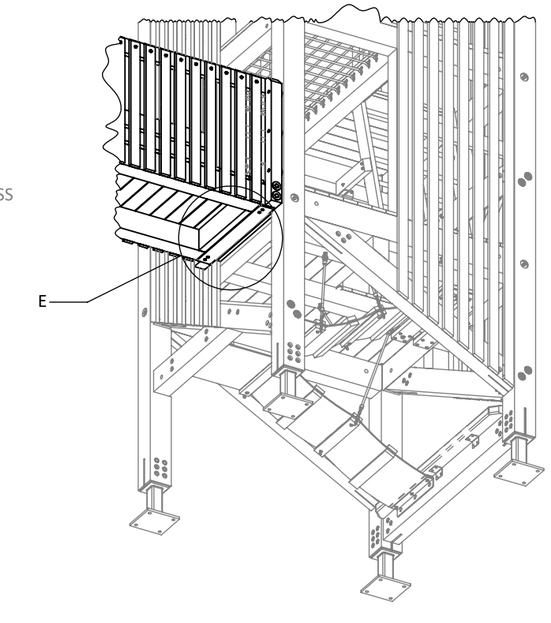

LOOKING UNDER BRIDGE

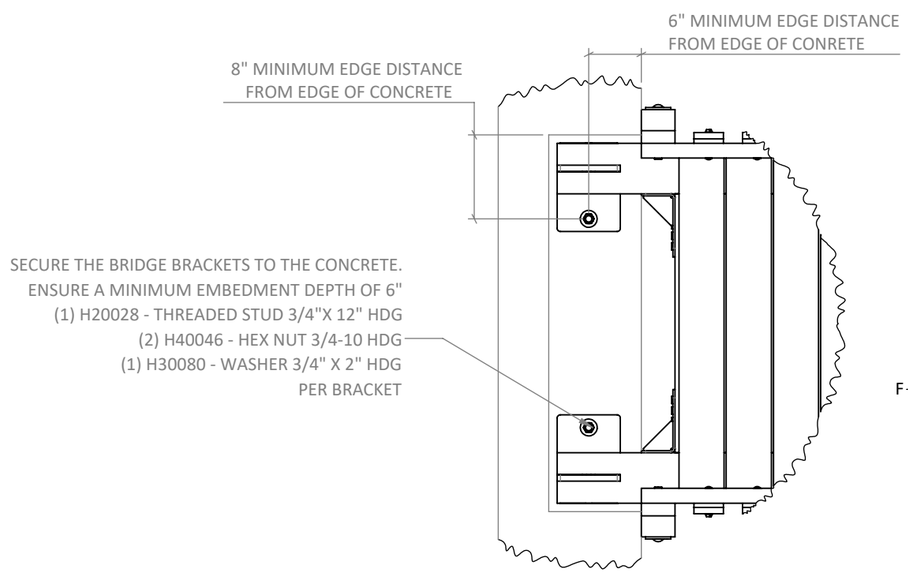

DETAIL F

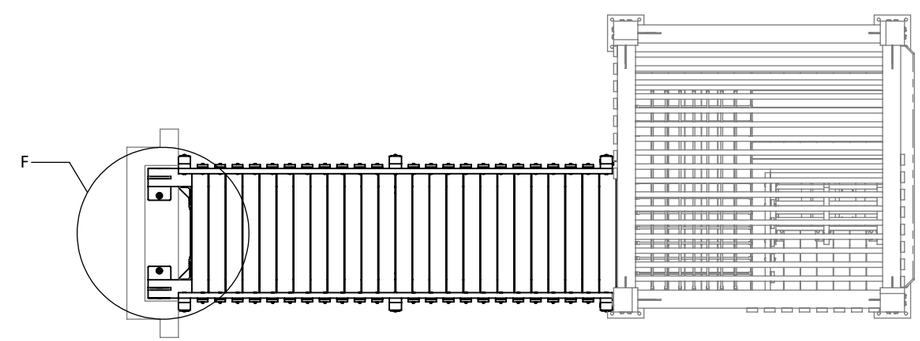

PLAN VIEW

PROPERTY OF EARTHSCAPE PLAY INC. - DO NOT COPY. DO NOT DISTRIBUTE.

REINSTALL DECKBOARDS

STEP 11 - REINSTALL DECKBOARDS AT TOWER

Trim the removed deckboards to suit the gap in decking between the bridge and tower.

Ensure a +/-6mm (1/4") gap between deckboards as per Detail K. Deckboards must not touch. Reinstall with the original screws.

STEP 12 - REINSTALL DECKBOARDS AT ABUTMENT

Trim the removed deckboards to suit the gap in decking between the bridge and the abutment. By design the deckboards are intended to be flush with the finished grade at the abutment.

Ensure a +/-6mm (1/4") gap between deckboards as per Detail J and L. Deckboards must not touch. Reinstall with the original screws.

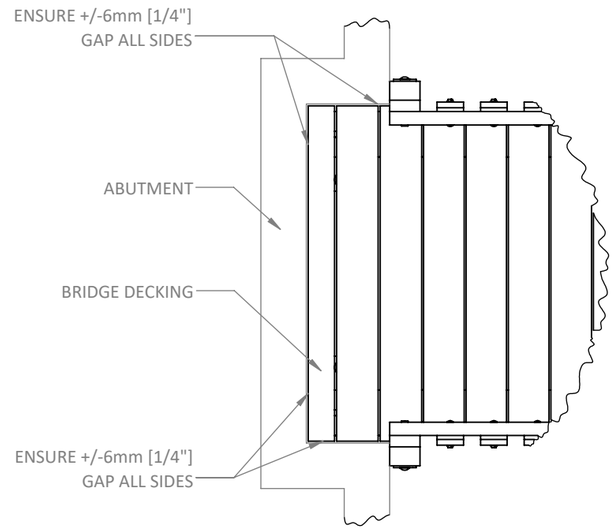

DETAIL L

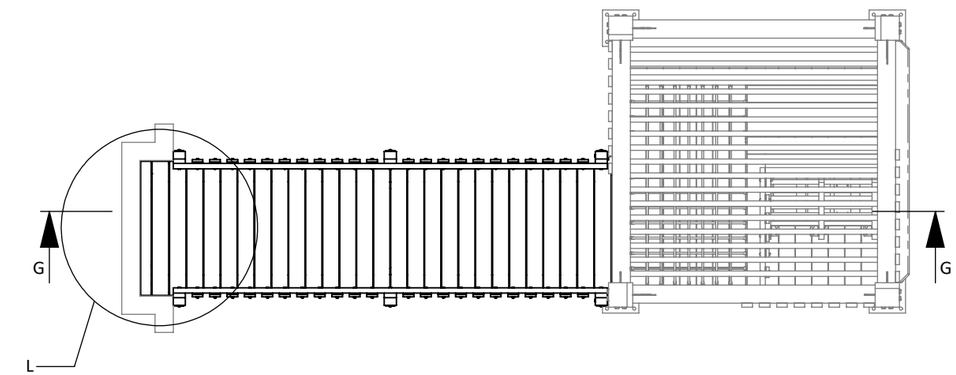

PLAN VIEW

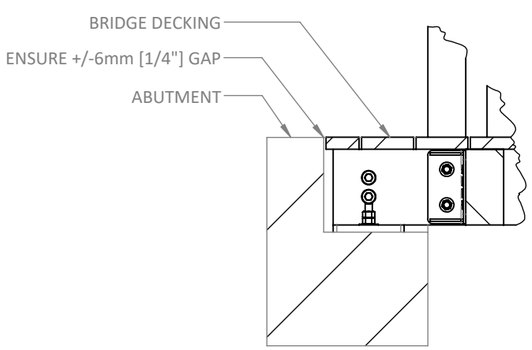

DETAIL J
DECKBOARDS AT ABUTMENT

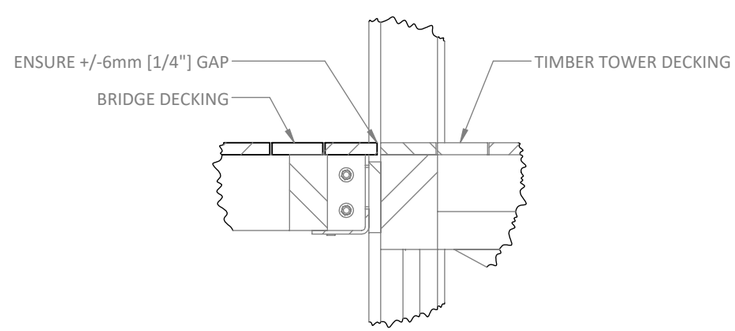

DETAIL K
DECKBOARDS AT TOWER

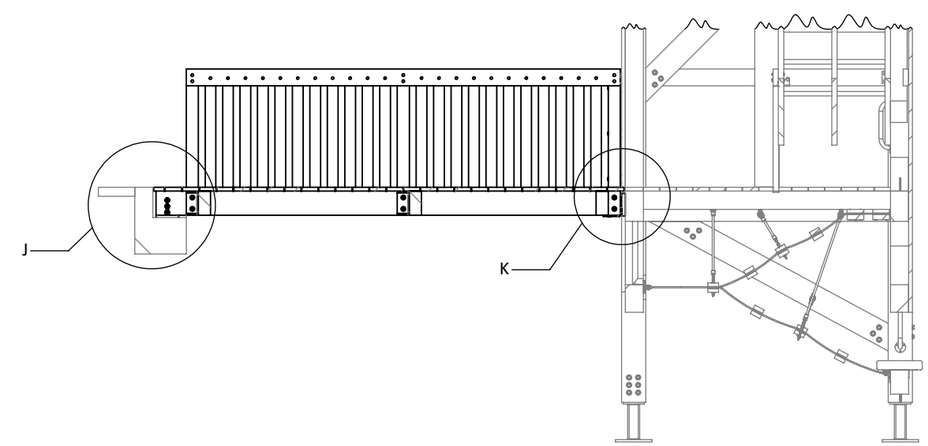

SECTION G-G

DATE DOCUMENT RELEASED 2025-09-18
DOCUMENT NUMBER: 1209450 - R1

PROPERTY OF EARTHSCAPE PLAY INC. - DO NOT COPY. DO NOT DISTRIBUTE.

INSTALLATION INSTRUCTIONS

EARTHSCAPE COLLECTIONS

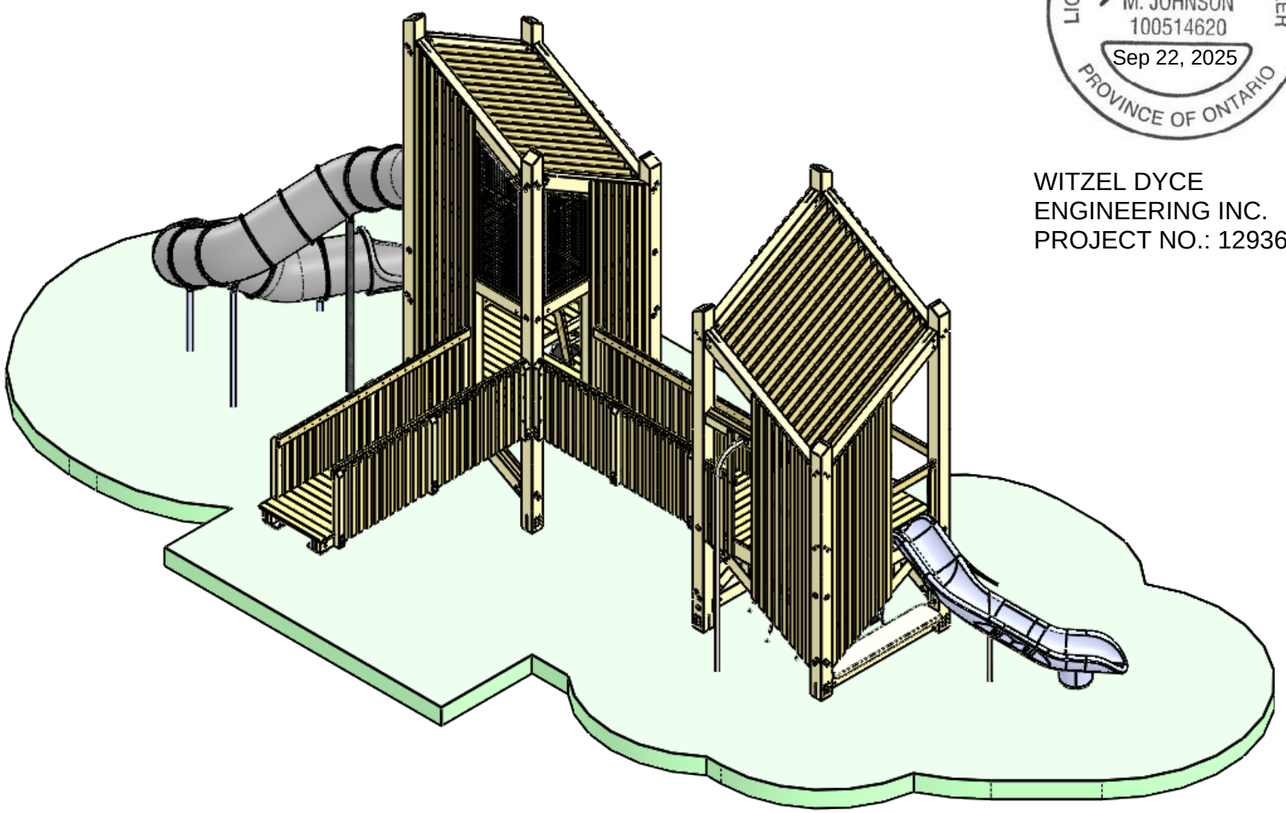

LICENSED PROFESSIONAL ENGINEER
M. JOHNSON
100514620
Sep 22, 2025
PROVINCE OF ONTARIO

WITZEL DYCE
ENGINEERING INC.
PROJECT NO.: 12936-165

COMBINED ASSEMBLY

THESE INSTRUCTIONS APPLY TO THE UNIQUE TOWER CONFIGURATION FOR:

PROJECT NUMBER: ESC0499
DESIGNED FOR: HURLD PARK
TO BE INSTALLED IN: WOBURN, MA

NOTE: COLOURS SHOWN ARE REPRESENTATIONAL AND MAY NOT BE THE SAME AS THOSE OF THE SUPPLIED PRODUCT

DATE DOCUMENT RELEASED 2025-09-18
DOCUMENT NUMBER: 1209315-R1

PROPERTY OF EARTHSCAPE PLAY INC. - DO NOT COPY. DO NOT DISTRIBUTE.

SPECIFICATIONS

INTENDED USER AGE GROUP: 5-12 y
MAXIMUM HEIGHT OF STRUCTURE: 24'0" ABOVE FINISHED PLAY SURFACE
MAXIMUM DESIGNATED FALL HEIGHT: 6'-8"
AREA OF SURFACING: 1420 ft²
APPROXIMATE AS SHIPPED WEIGHT:

- 1 LEVEL TIMBER TOWER - 4,350 LBS
- 2 LEVEL TIMBER TOWER - 5,500 LBS
- 10' WOODEN BRIDGE - 670 LBS
- 12' MODIFIED WOODEN BRIDGE - 870 LBS

RECOMMENDED INSTALLATION BUFFER

Play equipment requires a variety of offsets to other elements in a playground. The plan view on this page shows the minimum recommended area needed for installing this piece of play equipment by itself. Combining this play equipment with other pieces should be reviewed by a person with a Certified Playground Safety Inspector training.

The offset shown here includes a buffer beyond the ASTM requirements to account for fabrication and material variation.

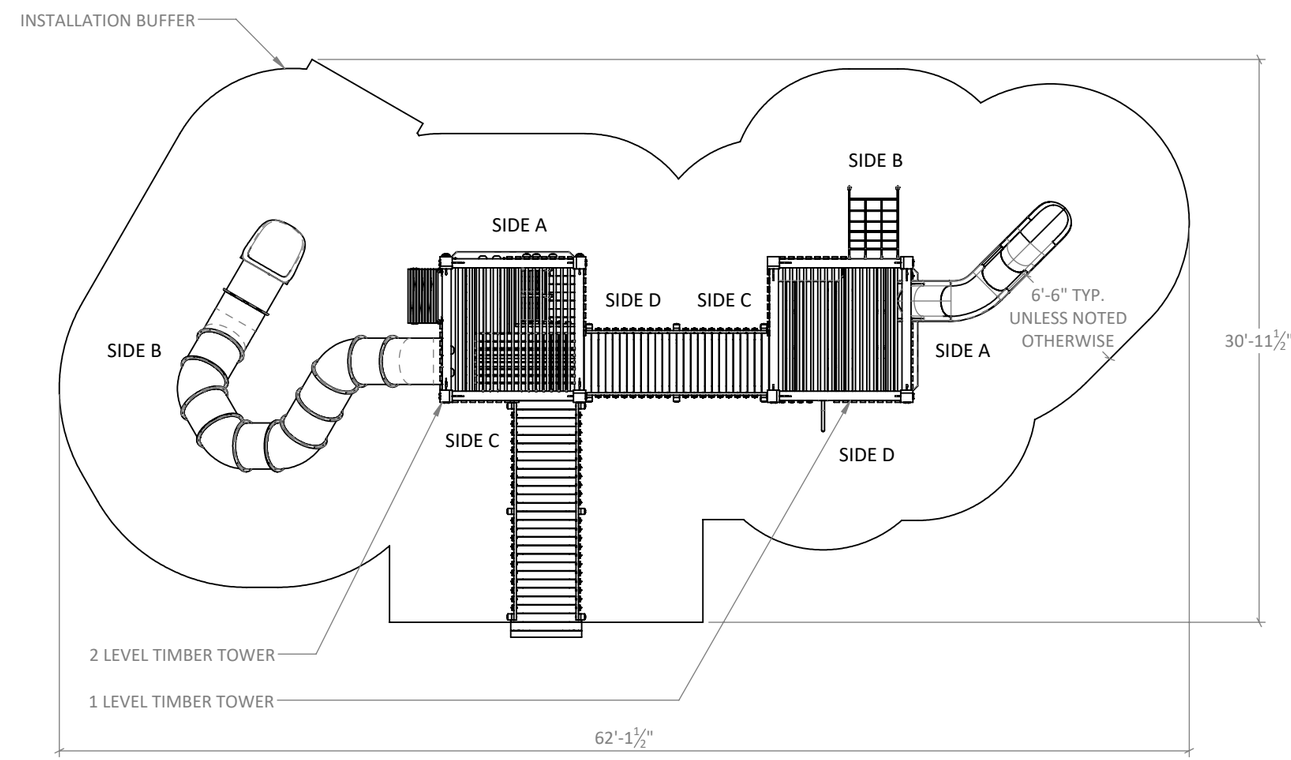

PROPERTY OF EARTHSCAPE PLAY INC. - DO NOT COPY. DO NOT DISTRIBUTE.

PLEASE READ ALL INSTRUCTIONS

Before starting to install this equipment be sure to read through and understand these instructions.

If you have any questions, contact your Earthscape Representative for assistance before proceeding.

Time, tools and materials noted on this sheet only cover the installation of the base timber tower. They do not include any of the add-ons. See separate installation packages to understand what additional time will be required.

MEASUREMENTS AND STANDARDS

Measurements have been provided in both metres and [feet-inches]. Ensure to follow standards noted for the location in which this play equipment is being installed. Those marked CSA are to be used in Canada and those marked ASTM to be used in the United States.

LIST OF ABBREVIATIONS

AYC = Alaskan Yellow Cedar
WRC = Western Red Cedar
DPS = Designated Play Surface
SS = Stainless Steel
HDG = Hot Dipped Galvanized
WWM = Welded Wire Mesh
TYP = Typical
C/W = Complete With
UNO = Unless Noted Otherwise
EWF = Engineered Wood Fiber
PIP = Poured-In-Place Rubber Surfacing
PT = Pressure Treated

TOOLS SUPPLIED WITH THIS PRODUCT

- None

TOOLS THE INSTALLER NEEDS TO SUPPLY

- T25 drive bit
- T40 drive bit
- High Torque Drill
- Wood drill bit set up to and including 1/2"
- 1/2" impact driver
- Socket Set up to and including 1-1/8"
- Hammer drill
- Concrete drill bit set up to and including size required by epoxy manufacturer to set 3/4" threaded rod 8" deep in concrete pad
- Angle grinder (with course 24 grit sanding disks and metal cut off disks)
- Transit or Laser Level
- Rigging and lifting straps

EQUIPMENT THE INSTALLER NEEDS TO SUPPLY

Machine to lift and position heaviest element.

- Pre-assembled 2 Level Tower 5,500 LBS lbs

INSTALLER CREW AND TIME REQUIRED

Number of people needed: 3
Typical total person-hours to install: 80 + concrete cure time

Time breakdown:

- 8 hours x 3 people for excavation and pouring concrete
- Time for concrete cure
- 16 hours x 3 people for onsite fabrication and play equipment installation
- 4 hours x 2 people for onsite Enclosed Bridge installation

MATERIALS THE INSTALLER NEEDS TO SUPPLY

- Threadmate threadlocker Vibra-Tite VC-3 (or equal)
- Epoxy - Simpson Strong Tie "Set 3G" or Hilti "Hy-200"
- Concrete - as specified in details

WARNINGS

These instructions do not provide specific guidance on the use of tools or the lifting and moving heavy objects. It is assumed that competent people are installing this product who are familiar with using the tools and equipment required and are knowledgeable and skilled at lifting and positioning heavy objects.

PROPERTY OF EARTHSCAPE PLAY INC. - DO NOT COPY. DO NOT DISTRIBUTE.

MAKE SURE YOU HAVE ALL THE PARTS

Examine the equipment and ensure you have all the required parts listed in the table below.

See "As Shipped Page" to understand orientation of product as delivered to site.

PART IMAGE	ITEM NO.	PART NO.	DESCRIPTION	QTY.
SEE IMAGE NEXT SHEET	1	1209039*	MODIFIED WOODEN BRIDGE 12'	1
SEE IMAGE THIS SHEET	2	F00185	1 LEVEL TIMBER TOWER	
NO IMAGE PROVIDED	3	F00227	CLIMBING HOLDS (PRE-INSTALLED)	1
SEE IMAGE NEXT SHEET	4	F00228*	CLADDED LADDER	1
SEE IMAGE THIS SHEET	5	F00302*	FILE POLE - SURFACE MOUNT 6' PLATFORM	1
SEE IMAGE THIS SHEET	6	F00308*	PLASTIC OPEN SLIDE - IN GROUND 6' - VEER LEFT	1
SEE IMAGE NEXT SHEET	7	F00316*	PLASTIC TUBE SLIDE - FLANGE 12' - TURN RIGHT	1
SEE IMAGE NEXT SHEET	8	F00363*	WOODEN BRIDGE 10'	1
SEE IMAGE NEXT SHEET	9	F00403*	SLING SEATS - PIP	1
SEE IMAGE THIS SHEET	10	F00405*	ACCESS CLIMBING NET - PIP	1
SEE IMAGE NEXT SHEET	11	F00407	2 LEVEL TIMBER TOWER	1
	12	H20019	THREADED STUD 3/4"-10 X 12" SS	32
	13	H30047V	WASHER 3/4" X 1-3/4" SS	32
	14	H40015	HEX NUT 3/4-10 SS	64

IMAGES OF FASTENERS IN THIS TABLE ARE REPRESENTATIONAL TO HELP IDENTIFY PARTS.

*THESE ASSEMBLIES INCLUDE ADDITIONAL HARDWARE. REVIEW THE SEPARATE INSTALLATION PACKAGES THAT CORRESPOND TO EACH ADD-ON FOR MORE INFORMATION.

F00405
ACCESS CLIMBING NET - PIP
SHIPS IN PIECES
SEE SEPARATE INSTALLATION PACKAGE FOR ADDITIONAL DETAILS

F00302
FIRE POLE - SURFACE MOUNT 6' PLATFORM
SHIPS IN PIECES
SEE SEPARATE INSTALLATION PACKAGE FOR ADDITIONAL DETAILS

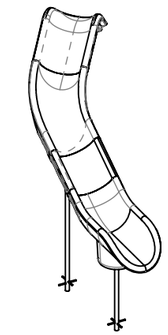

F00308
PLASTIC OPEN SLIDE - IN GROUND 6' - VEER LEFT
SHIPS IN PIECES
SEE SEPARATE INSTALLATION PACKAGE FOR ADDITIONAL DETAILS

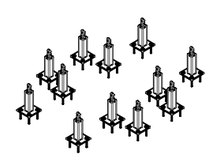

F00403
SLING SEATS - PIP
SHIPS IN PIECES
SEE SEPARATE INSTALLATION PACKAGE FOR ADDITIONAL DETAILS

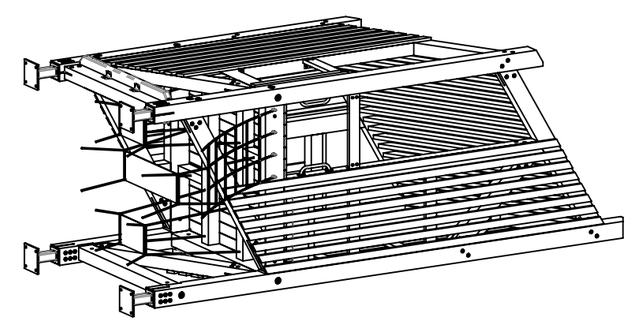

F00185
1 LEVEL TIMBER TOWER
SHIPS COMPLETE AS ILLUSTRATED
INSTALL DETAILS THIS PACKAGE

PROPERTY OF EARTHSCAPE PLAY INC. - DO NOT COPY. DO NOT DISTRIBUTE.

SUPPLIED PARTS (2 OF 2)

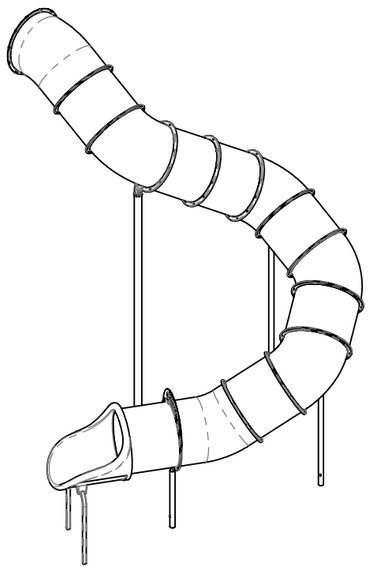

F00316
PLASTIC TUBE SLIDE - FLANGE
12' - TURN RIGHT
SHIPS IN PIECES
SEE SEPARATE INSTALLATION PACKAGE FOR
ADDITIONAL DETAILS

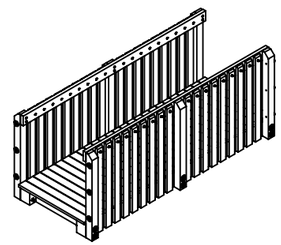

F00363
WOODEN BRIDGE 10'
SHIPS COMPLETE AS ILLUSTRATED
SEE SEPARATE INSTALLATION PACKAGE
FOR ADDITIONAL DETAILS

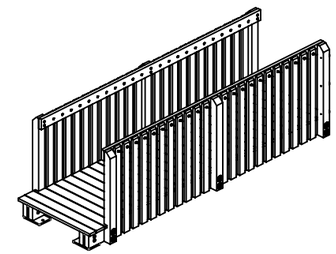

1209039
MODIFIED WOODEN BRIDGE 12'
SHIPS COMPLETE AS ILLUSTRATED
SEE SEPARATE INSTALLATION PACKAGE
FOR ADDITIONAL DETAILS

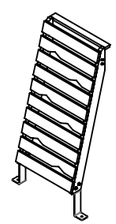

F00228
CLADDED LADDER
SHIPS COMPLETE AS ILLUSTRATED
SEE SEPARATE INSTALLATION PACKAGE FOR
ADDITIONAL DETAILS

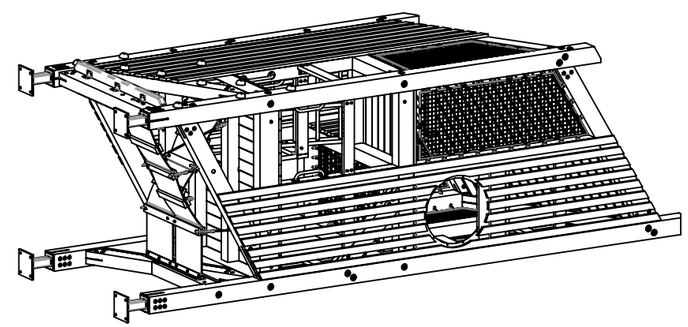

F00407
2 LEVEL TIMBER TOWER
SHIPS COMPLETE AS ILLUSTRATED
INSTALL DETAILS THIS PACKAGE

PROPERTY OF EARTHSCAPE PLAY INC. - DO NOT COPY. DO NOT DISTRIBUTE.

TOWER AS SHIPPED - 1 LEVEL TIMBER TOWER

COMBINED ASSEMBLY

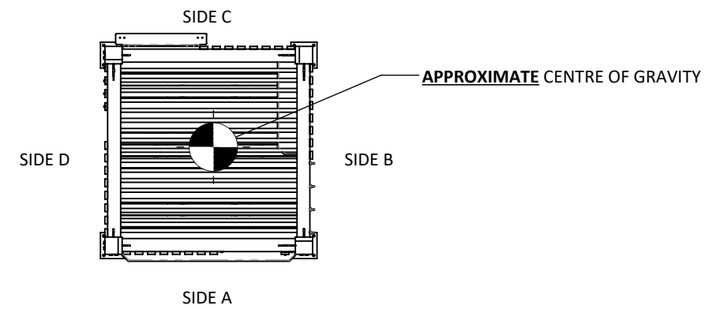

PLAN VIEW

PRE-ASSEMBLED TOWER AS SHIPPED
WEIGHS APPROXIMATELY:
4,350 LBS

DIMENSION TO
LIMITS OF POST
BASE BRACKETS

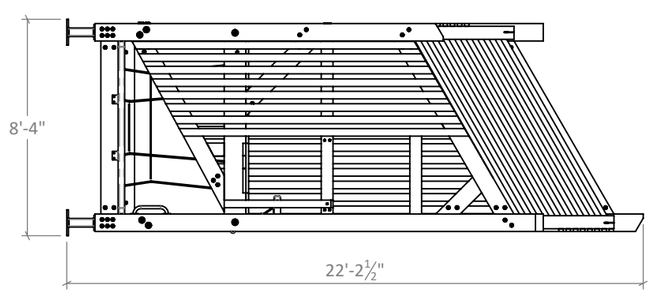

ORIENTATION ON TRUCK

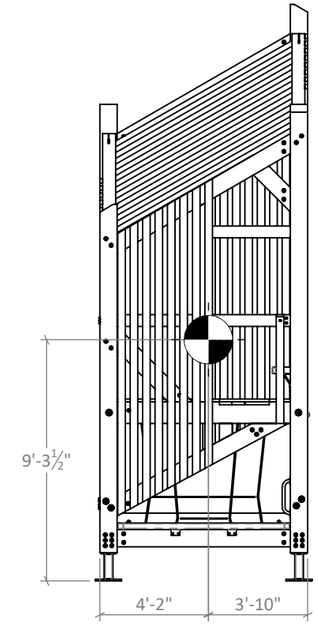

SIDE A ELEVATION

DIMENSIONS FROM OUTSIDE
FACE OF CORNER POSTS

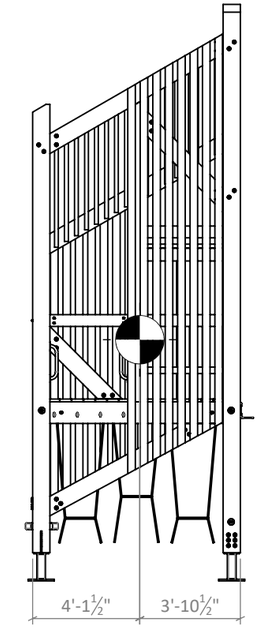

SIDE B ELEVATION

CENTRE OF GRAVITY

PROPERTY OF EARTHSCAPE PLAY INC. - DO NOT COPY. DO NOT DISTRIBUTE.

TOWER AS SHIPPED - 2 LEVEL TIMBER TOWER

COMBINED ASSEMBLY

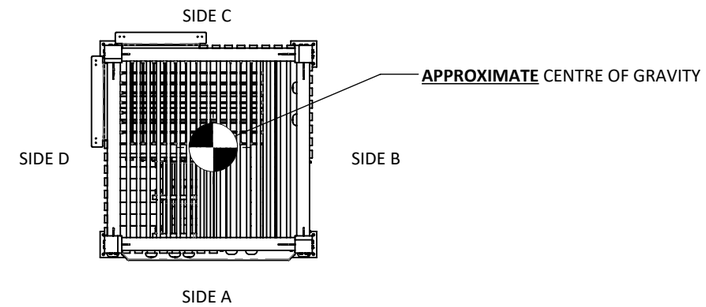

PLAN VIEW

PRE-ASSEMBLED TOWER AS SHIPPED
WEIGHS APPROXIMATELY:
5,500 LBS

DIMENSION TO
LIMITS OF POST
BASE BRACKETS

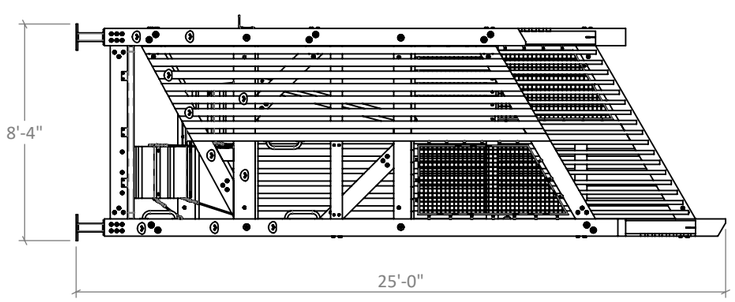

ORIENTATION ON TRUCK

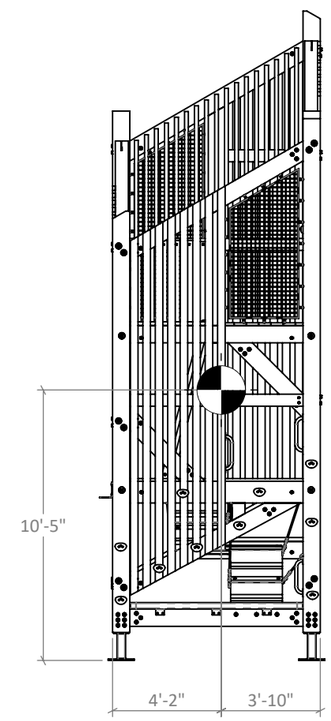

SIDE A ELEVATION

DIMENSIONS FROM OUTSIDE
FACE OF CORNER POSTS

CENTRE OF GRAVITY

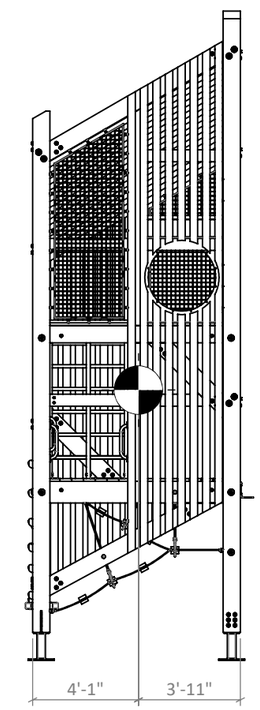

SIDE B ELEVATION

PROPERTY OF EARTHSCAPE PLAY INC. - DO NOT COPY. DO NOT DISTRIBUTE.

FINISHED PRODUCT - FRONT ISOMETRIC

WHAT THE FINISHED PRODUCT LOOKS LIKE

All concrete pads and play surfacing to be supplied by the installer.

Finished play surface is assumed to be level. Installation sites with sloped surfacing may not work with the supplied equipment. If the play surface is sloped contact your Earthscape Representative for assistance before proceeding.

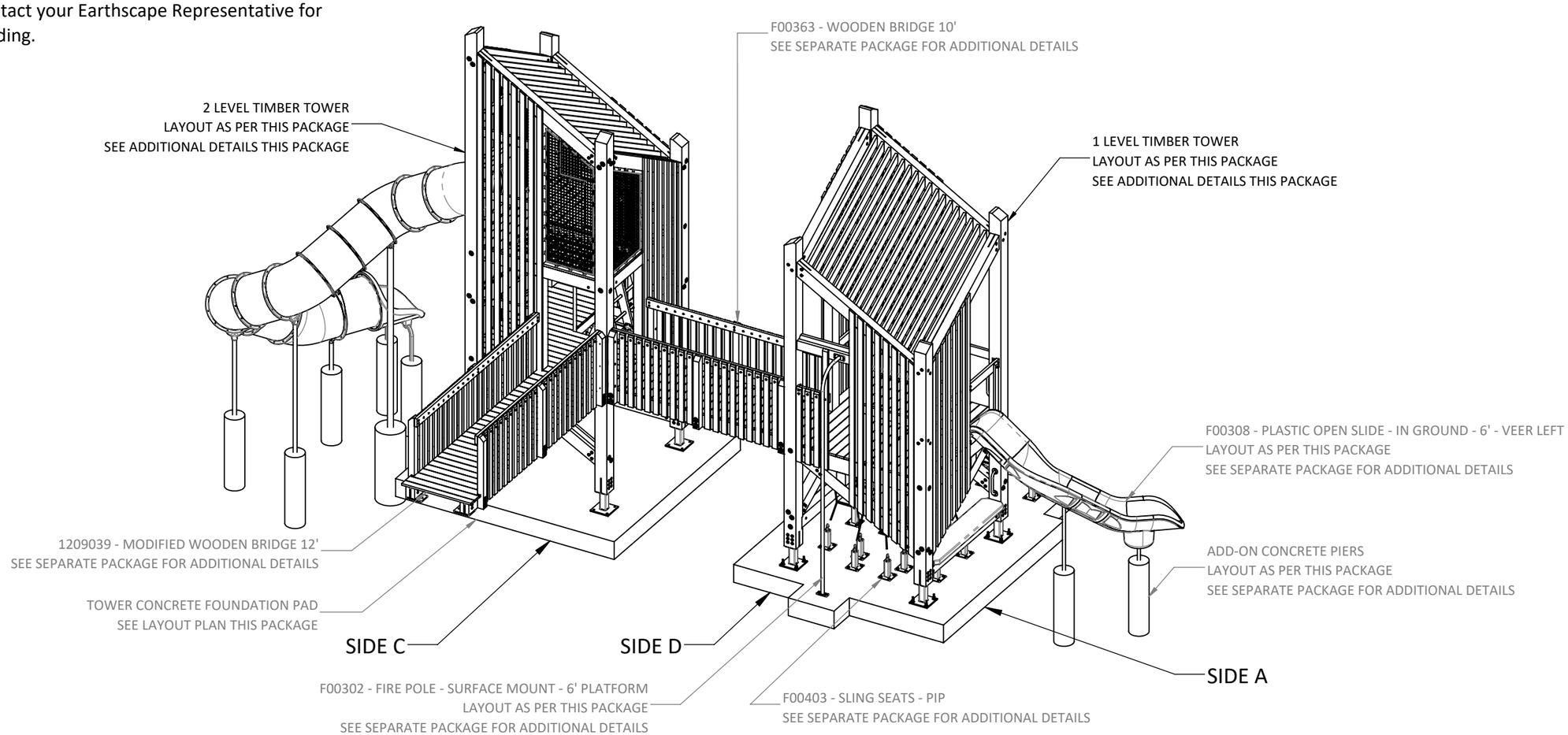

FRONT ISOMETRIC VIEW

PROPERTY OF EARTHSCAPE PLAY INC. - DO NOT COPY. DO NOT DISTRIBUTE.

FINISHED PRODUCT - REAR ISOMETRIC

WHAT THE FINISHED PRODUCT LOOKS LIKE

See note on the Finished Product - Front Isometric Sheet

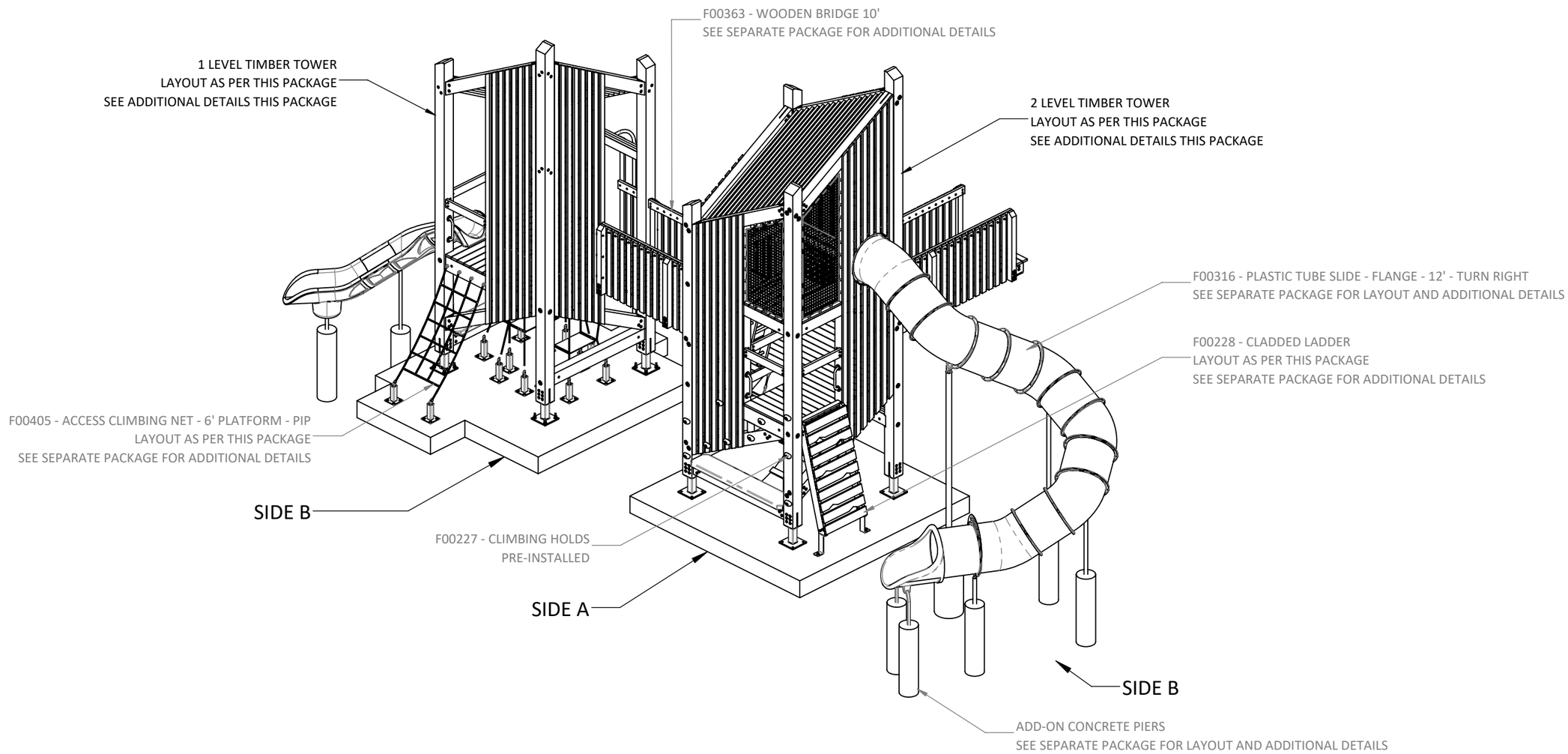

PROPERTY OF EARTHSCAPE PLAY INC. - DO NOT COPY. DO NOT DISTRIBUTE.

FINISHED PRODUCT - 1 LEVEL TIMBER TOWER

WHAT THE FINISHED PRODUCT LOOKS LIKE

See note on the Finished Product - Front Isometric Sheet

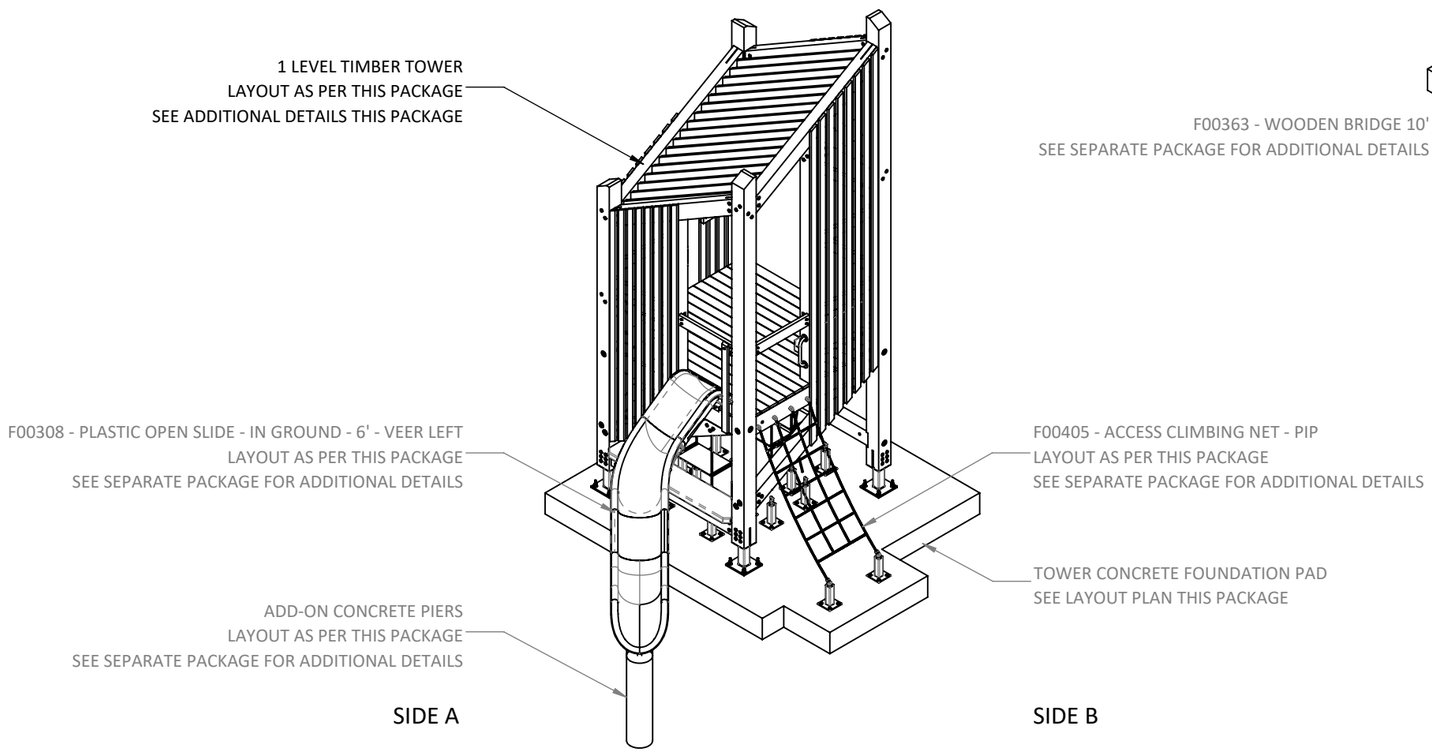

FRONT ISOMETRIC VIEW

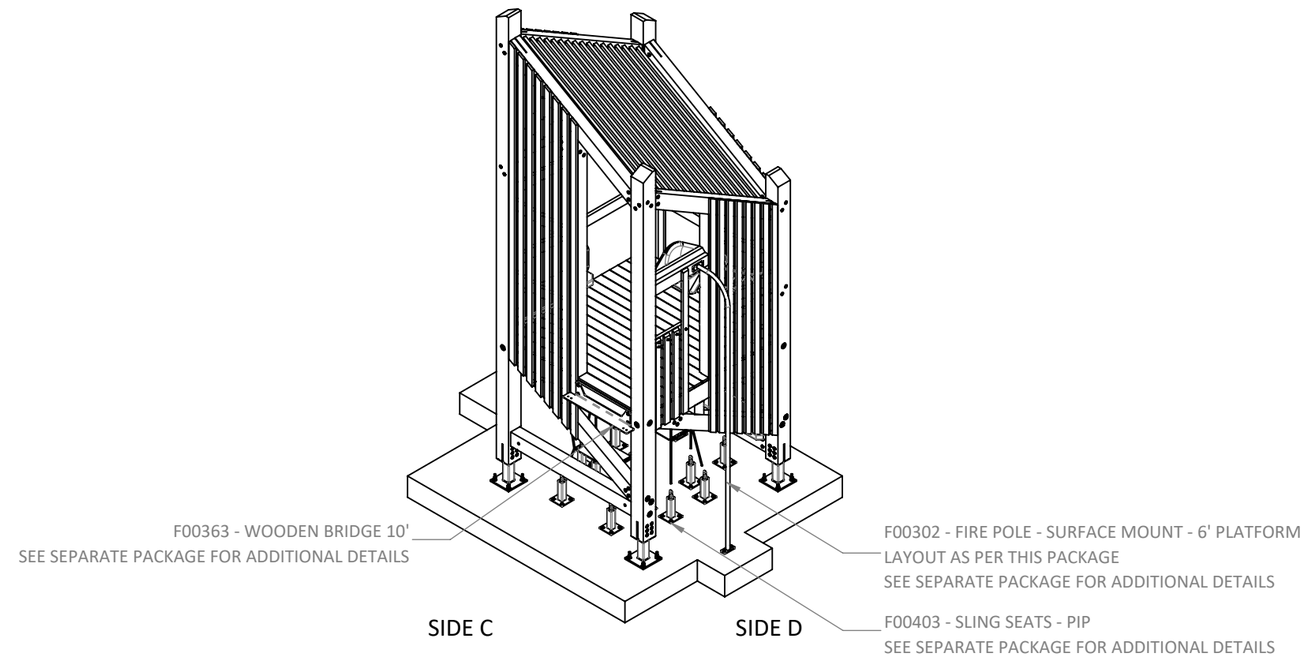

FRONT ISOMETRIC VIEW

PROPERTY OF EARTHSCAPE PLAY INC. - DO NOT COPY. DO NOT DISTRIBUTE.

FINISHED PRODUCT - 2 LEVEL TIMBER TOWER

WHAT THE FINISHED PRODUCT LOOKS LIKE

See note on the Finished Product - Front Isometric Sheet

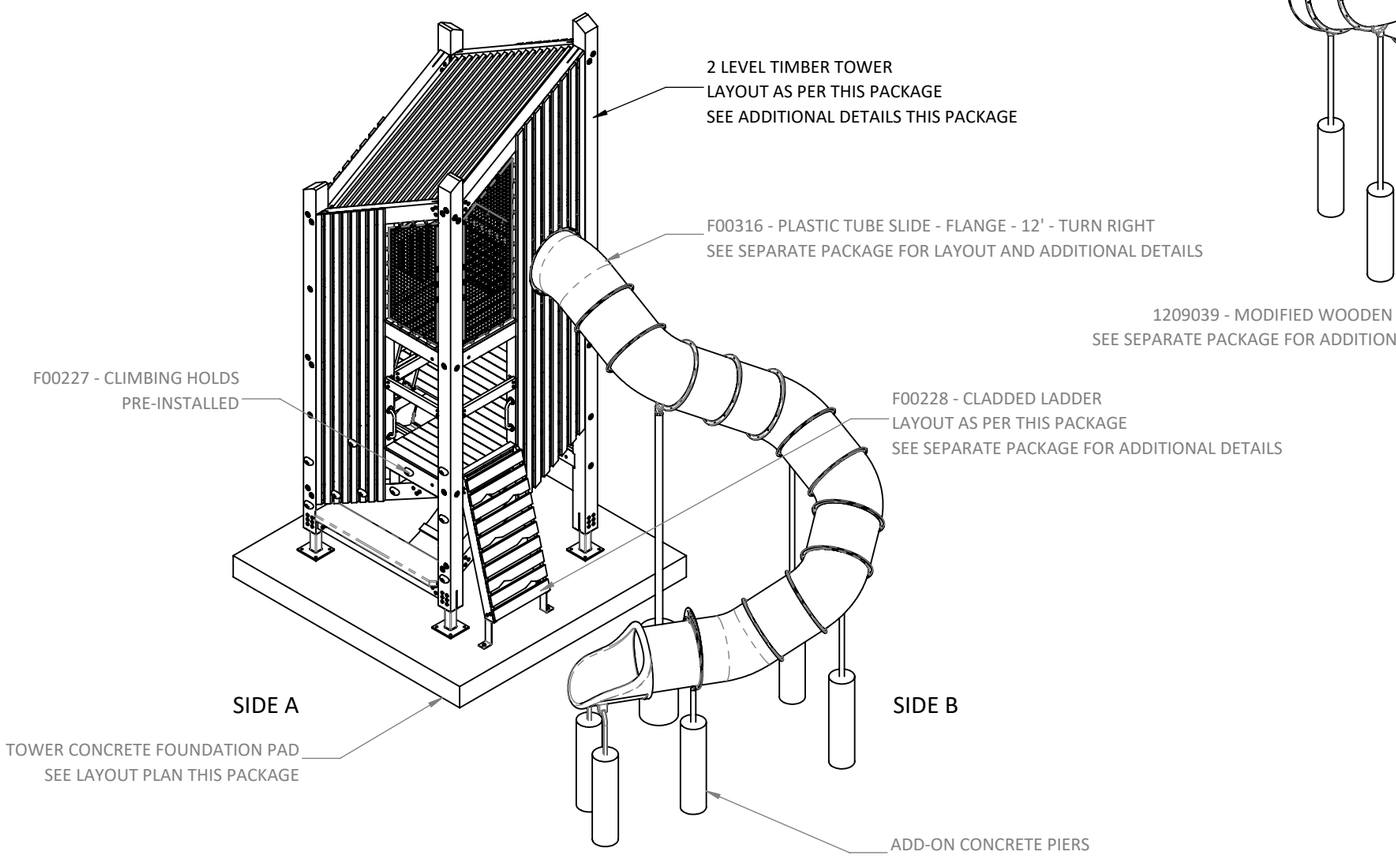

FRONT ISOMETRIC VIEW

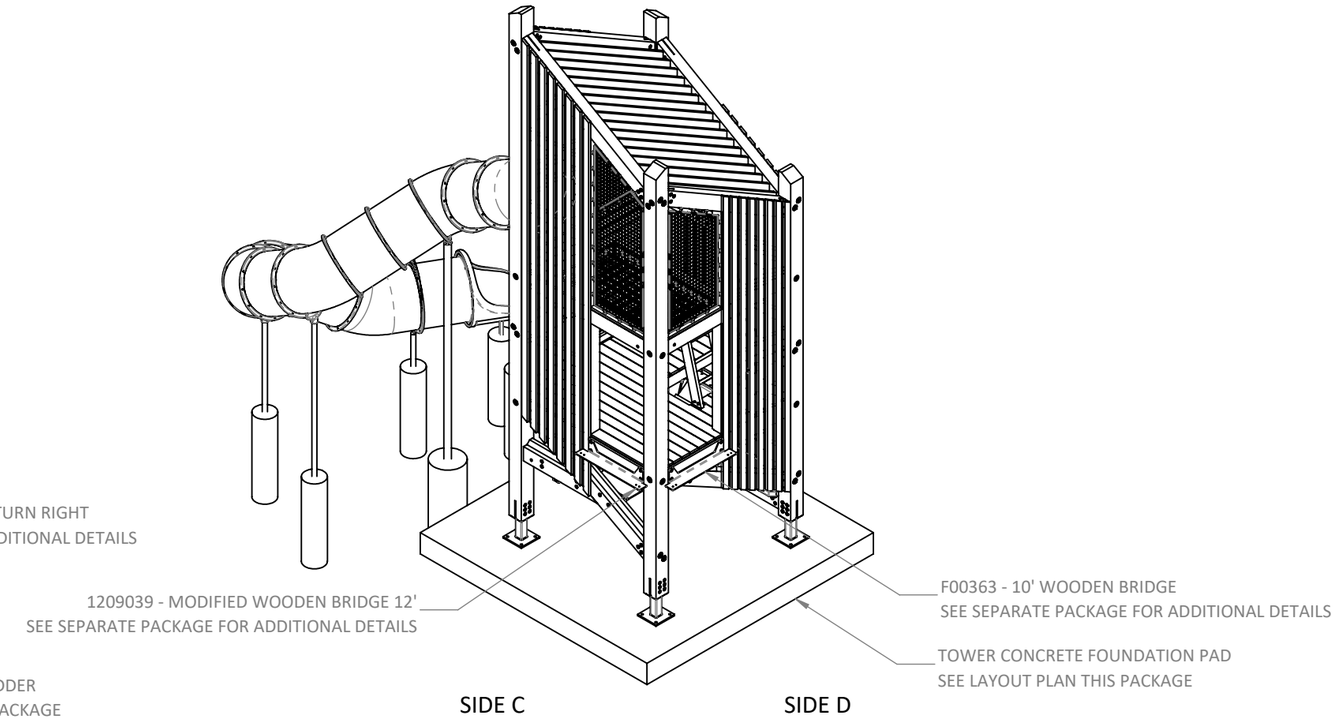

FRONT ISOMETRIC VIEW

PROPERTY OF EARTHSCAPE PLAY INC. - DO NOT COPY. DO NOT DISTRIBUTE.

FINISHED PRODUCT - PLAN VIEW

REAR

WHAT THE FINISHED PRODUCT LOOKS LIKE

See note on the Finished Product - Front Isometric sheet

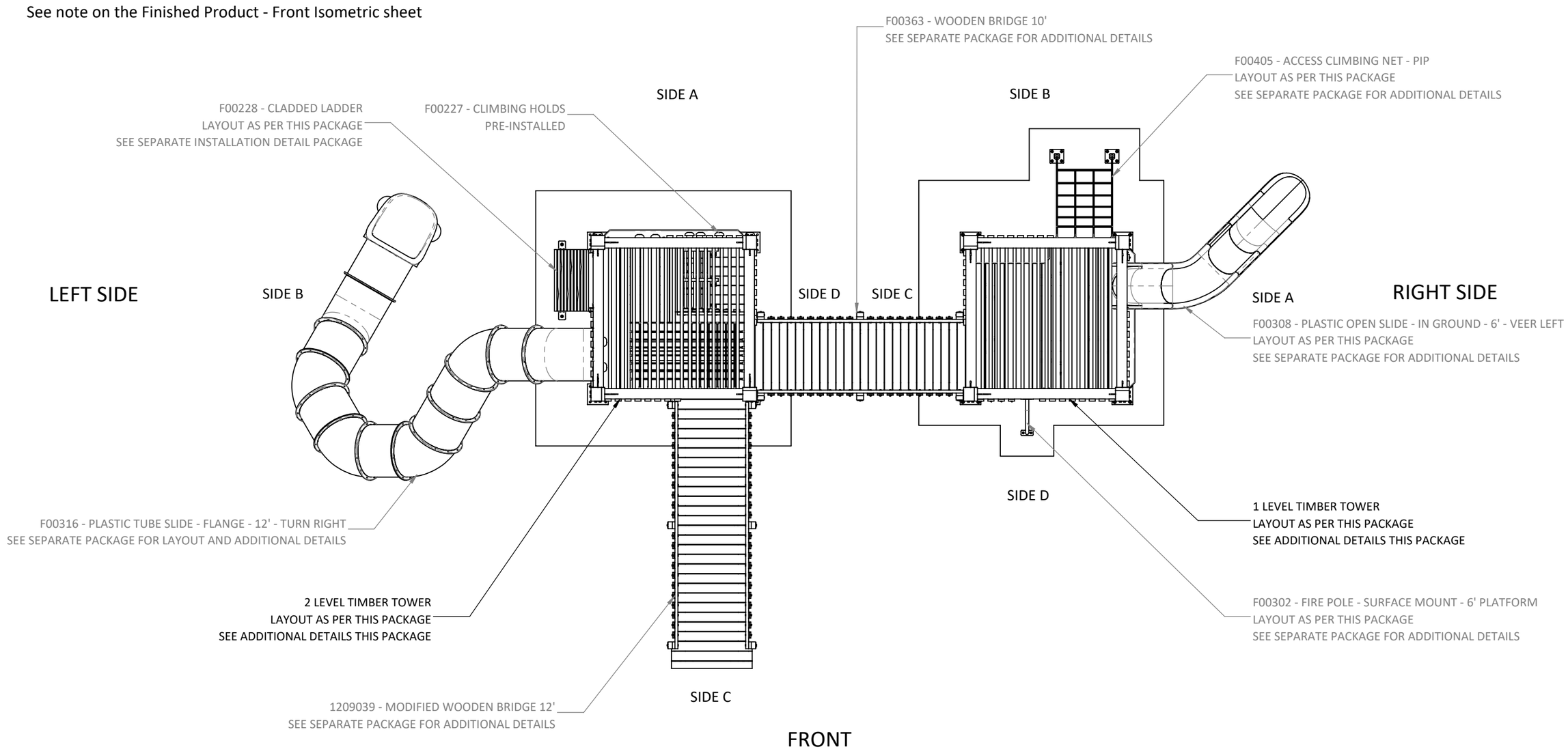

FRONT

PROPERTY OF EARTHSCAPE PLAY INC. - DO NOT COPY. DO NOT DISTRIBUTE.

WHAT THE FINISHED PRODUCT LOOKS LIKE

See note on the Finished Product - Front Isometric sheet

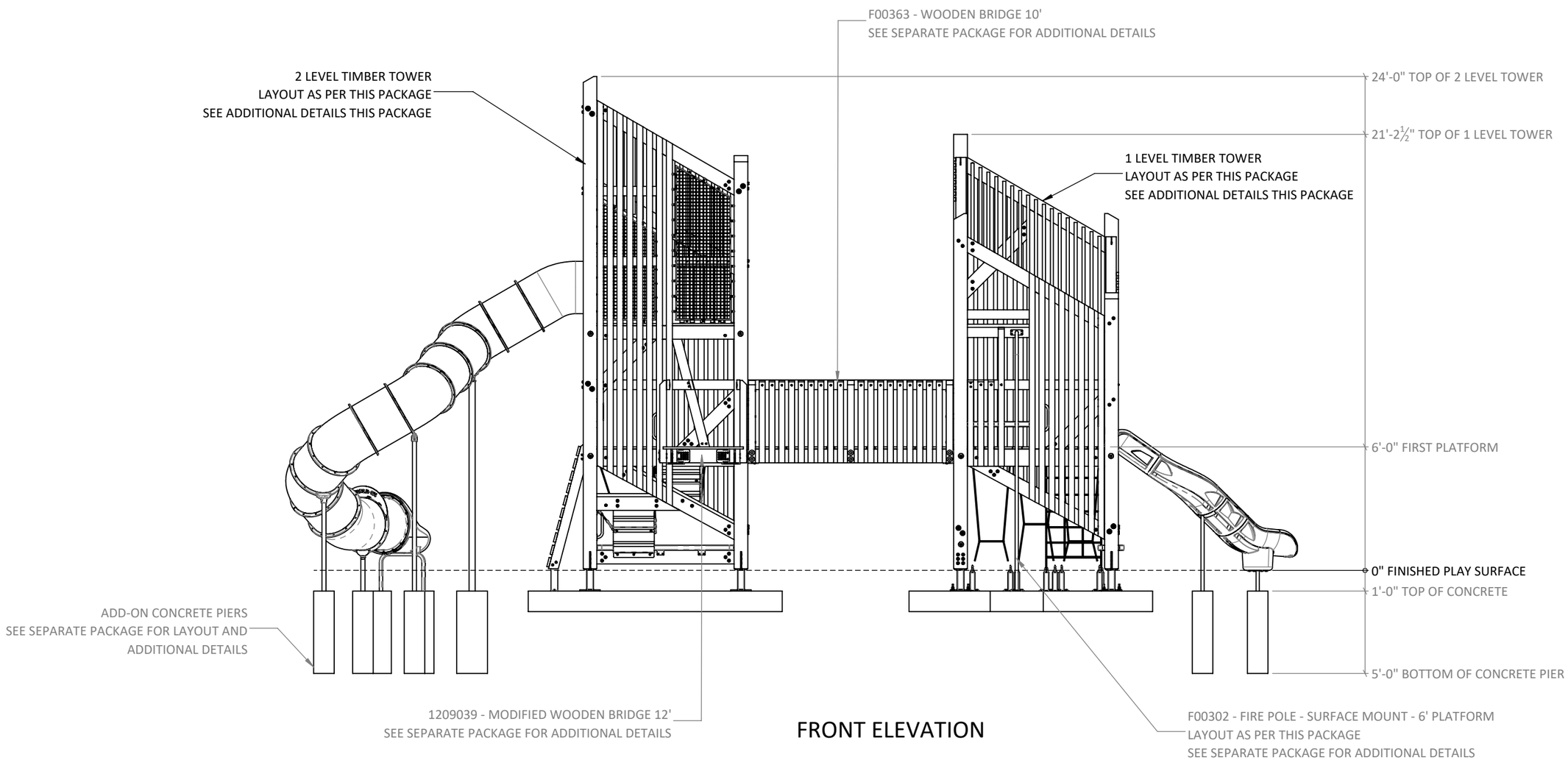

FRONT ELEVATION

PROPERTY OF EARTHSCAPE PLAY INC. - DO NOT COPY. DO NOT DISTRIBUTE.

FINISHED PRODUCT - ELEVATIONS 2 OF 4

WHAT THE FINISHED PRODUCT LOOKS LIKE

See note on the Finished Product - Front Isometric sheet

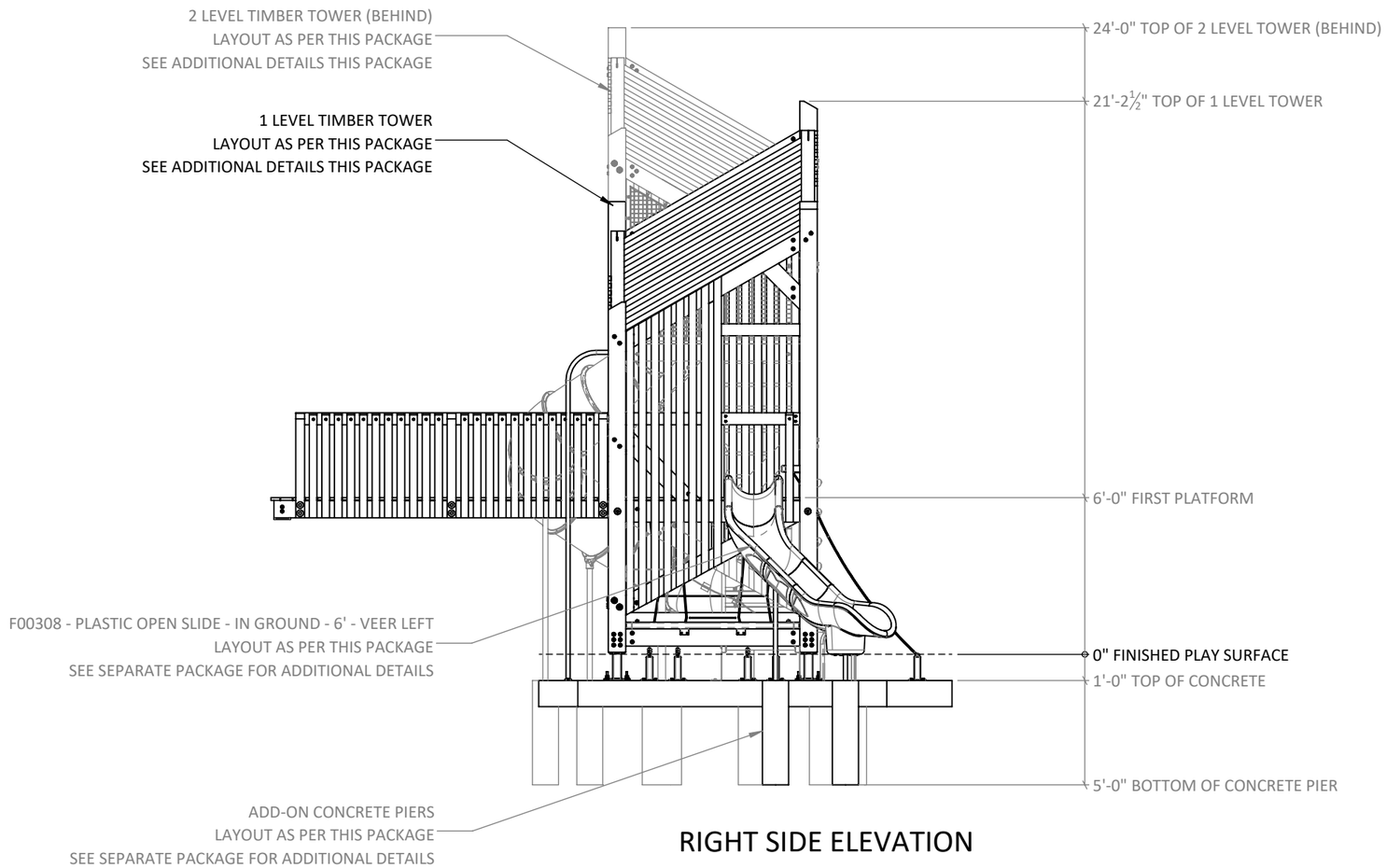

RIGHT SIDE ELEVATION

PROPERTY OF EARTHSCAPE PLAY INC. - DO NOT COPY. DO NOT DISTRIBUTE.

WHAT THE FINISHED PRODUCT LOOKS LIKE

See note on the Finished Product - Front Isometric sheet

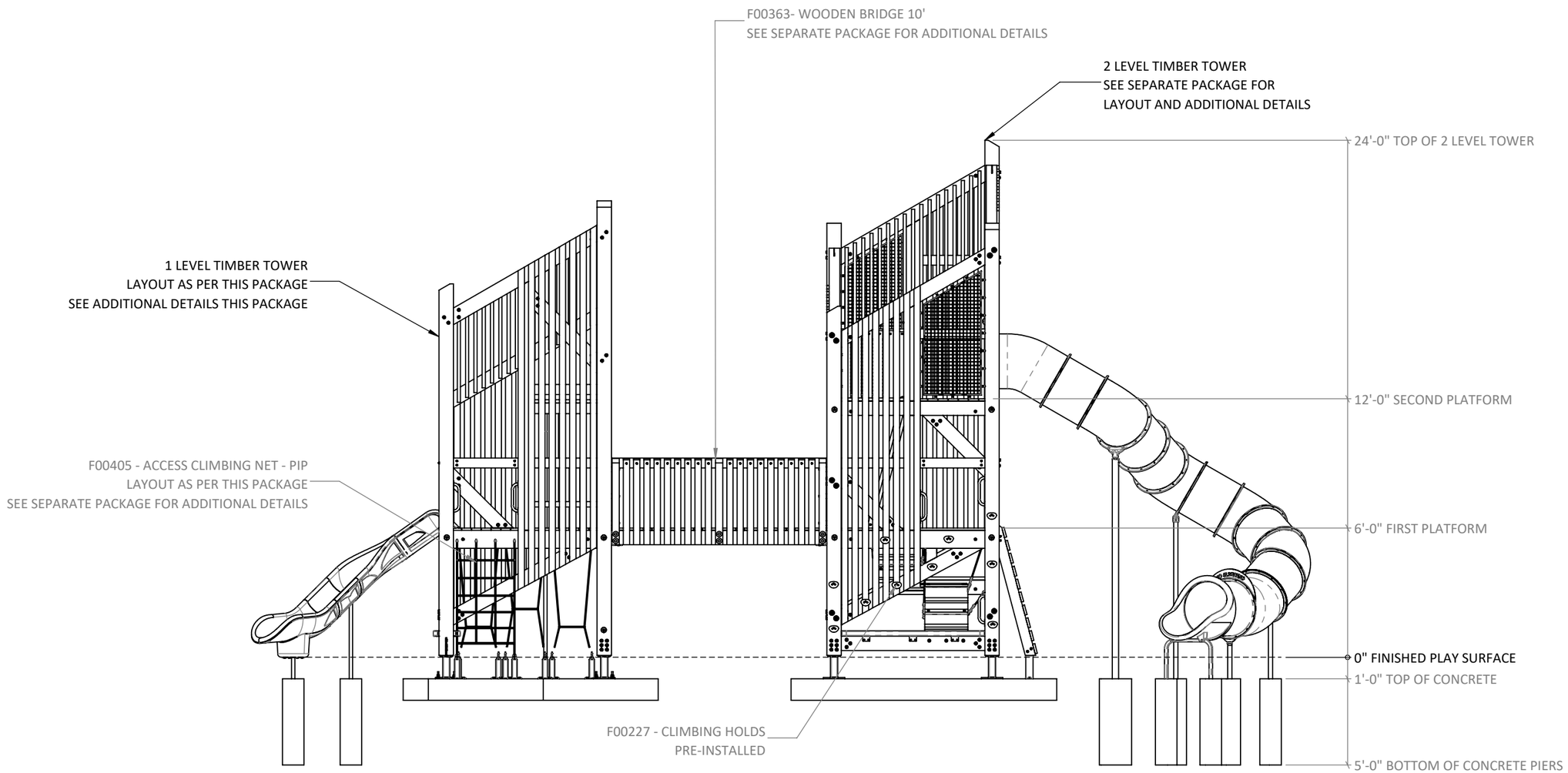

REAR ELEVATION

PROPERTY OF EARTHSCAPE PLAY INC. - DO NOT COPY. DO NOT DISTRIBUTE.

FINISHED PRODUCT - ELEVATIONS 4 OF 4

WHAT THE FINISHED PRODUCT LOOKS LIKE

See note on the Finished Product - Isometrics sheet

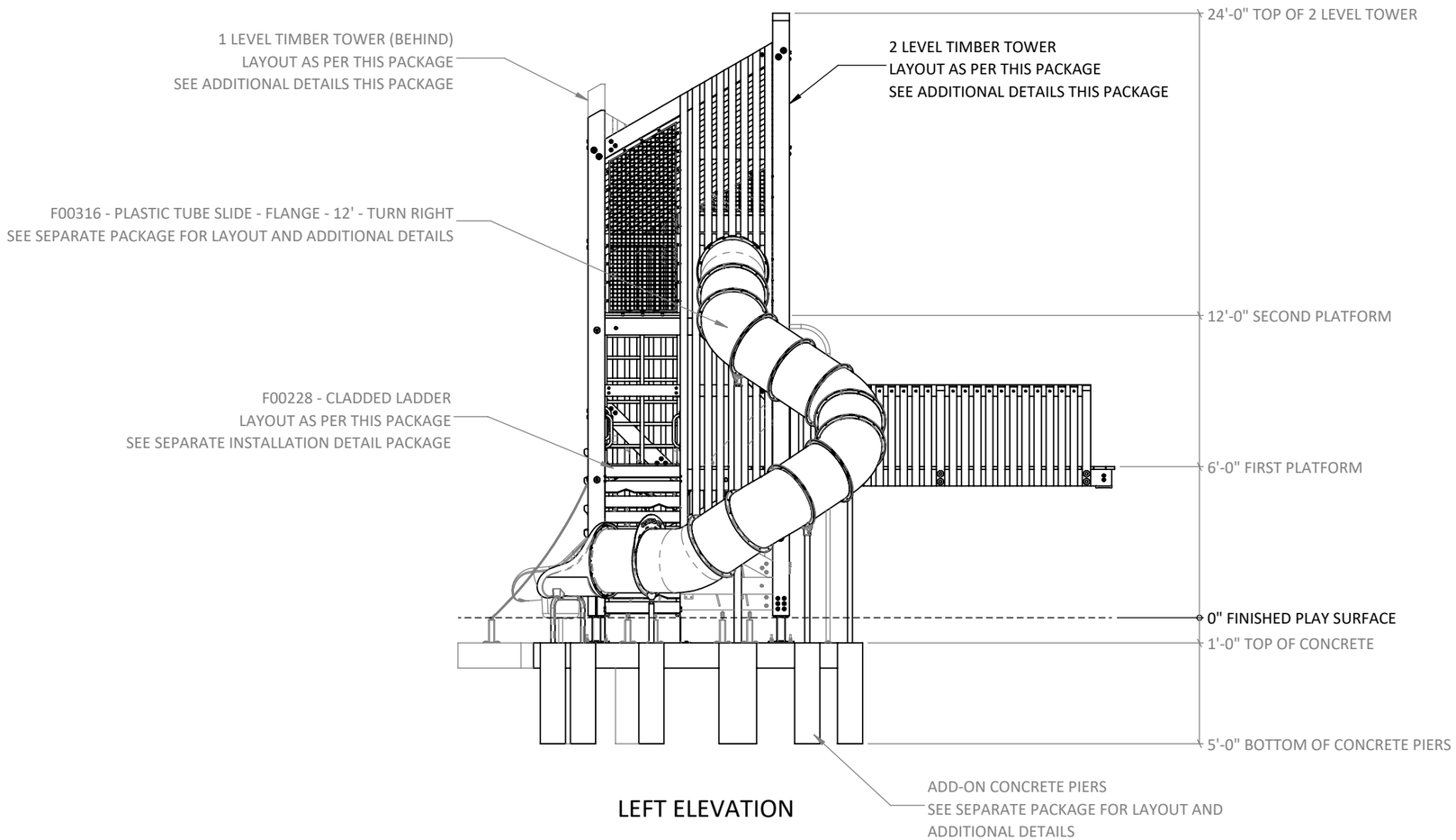

LEFT ELEVATION

PROPERTY OF EARTHSCAPE PLAY INC. - DO NOT COPY. DO NOT DISTRIBUTE.

LOCATE PLAY EQUIPMENT AND POUR TOWER PAD

STEP 1 - LOCATING THE EQUIPMENT ON SITE

Layout and mark the location of the equipment Reference Points (R.P.) on your site. Reference Points are taken from the outside corners of the tower base brackets. Refer to 1209039 - Modified Timber Bridge 12' to ensure the concrete is positioned with respect to the abutment for the bridge. The location of these points relative to the site is not within the scope of these instructions and should be provided by others.

Ensure you know what the designed elevation is for the finished safety surface. All heights provided in these instructions will be relative to the finished play surface. The finished surface elevation is not within the scope of these instructions and should be provided by others.

STEP 2 - LAYOUT CONCRETE PAD

Layout and mark the outer edge of concrete pad based off the Reference Points. Refer to Foundation Plan this sheet for details

Top of concrete is 305mm [12"] below finished play surface.

STEP 3 - EXCAVATE FOR CONCRETE PAD

Excavate area and prep as per Concrete Placement Detail SD-001B at the back of this package.

The foundation detail provided in these instructions has been developed assuming typical soil conditions specified in general notes. If the subgrade encountered does not meet these conditions, the subgrade must be improved or revisions made to this detail. Revisions to the detail are the responsibility of the installer and it is strongly recommended any changes be reviewed and approved by a registered engineer.

STEP 4 - POUR CONCRETE PAD

Form and pour timber tower concrete pads as per Foundation Plan this sheet and Concrete Placement Detail SD-001B on this sheet.

Allow concrete to cure prior to proceeding to Step 5.

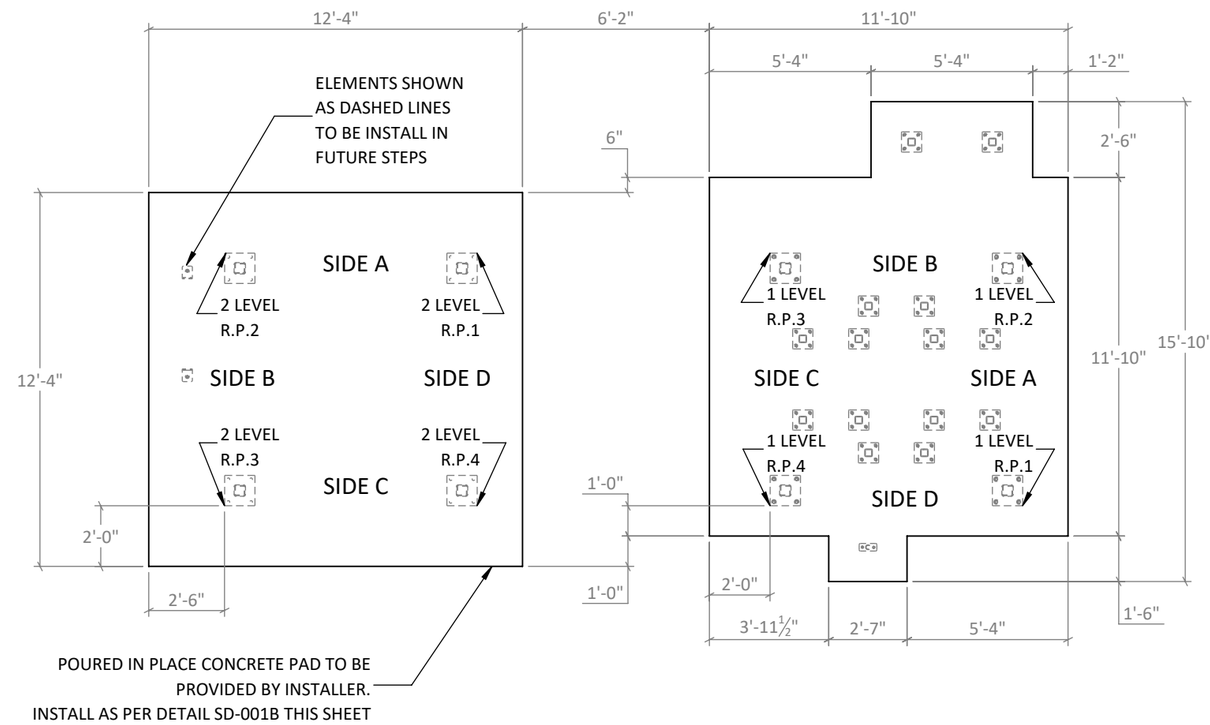

FOUNDATION PLAN

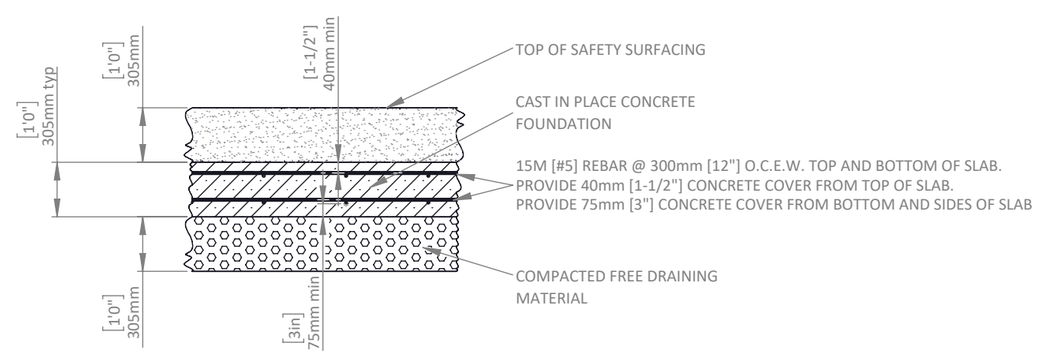

FOUNDATION NOTES:

1. TOP OF CONCRETE TO BE SET AT 300mm [12"] BELOW TOP OF SURFACING UNO.
2. SLAB TO BEAR ON MATERIAL BELOW THE FROST DEPTH, OR ALTERNATIVELY ON 300mm [12"] OF FREE DRAINING NON FROST SUSCEPTIBLE SOILS, COMPACTED TO 98% SPDD.

CONCRETE PLACEMENT DETAIL SD-001B

PROPERTY OF EARTHSCAPE PLAY INC. - DO NOT COPY. DO NOT DISTRIBUTE.

POSITION 2 LEVEL TIMBER TOWER

STEP 5 - POSITION TOWER

Layout and mark the location of the equipment Reference Points (R.P.) on the cured concrete pad as per this sheet.

Position the 2 Level Timber Tower on the foundation pad aligning it to the site reference points. Reference Points align with the outside corners of the tower base brackets. Refer to 1209039 - Modified Timber Bridge 12' to ensure the tower is centered with the concrete abutment for the bridge.

STEP 6 - INSTALL 12' MODIFIED WOODEN BRIDGE TO ABUTMENT

Install 1209039 - Modified Wooden Bridge 12' as per separate installation package. End of the bridge to secure to a concrete abutment provided by the installer

DO NOT ANCHOR TOWER TO THE FOUNDATION AT THIS TIME.

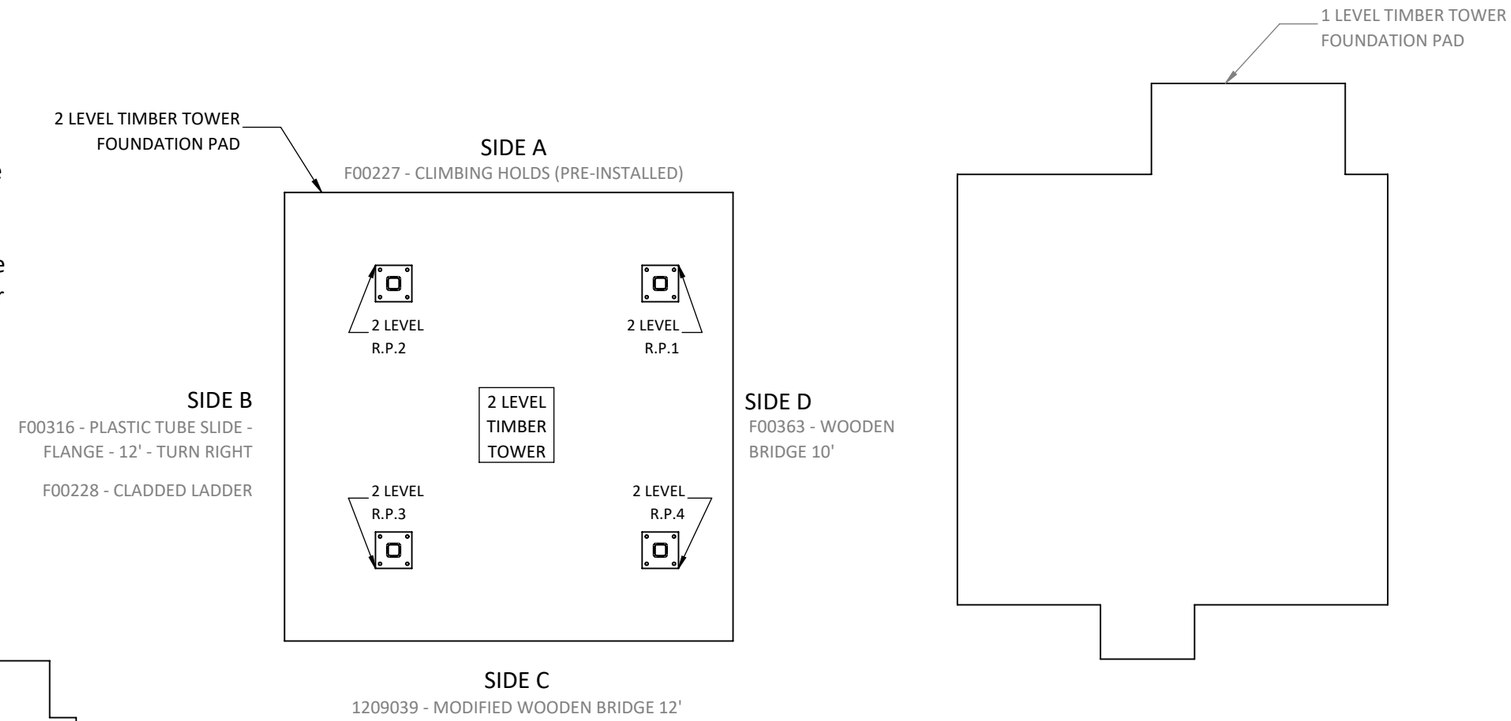

2 LEVEL TIMBER TOWER LAYOUT

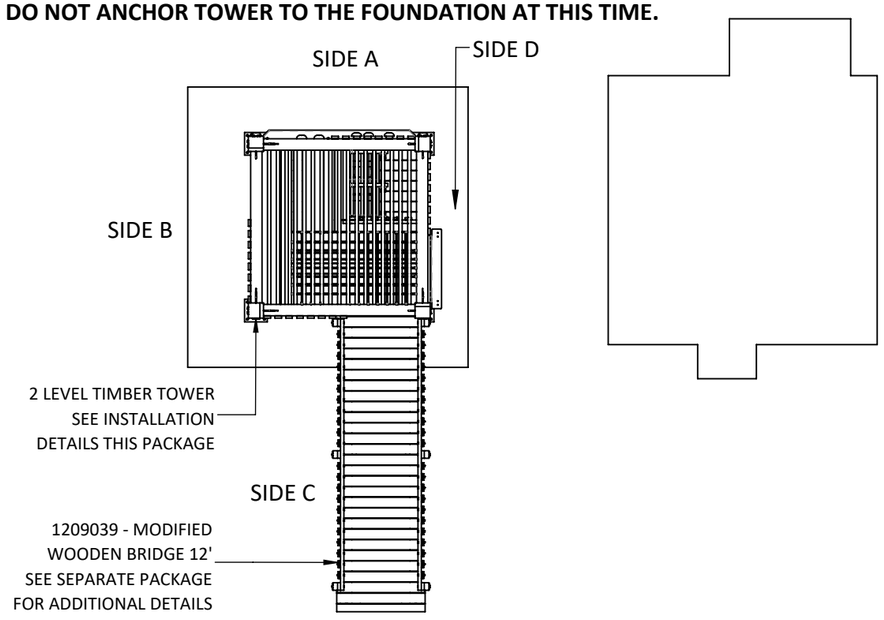

TOWER AT THE END OF STEP 6

PROPERTY OF EARTHSCAPE PLAY INC. - DO NOT COPY. DO NOT DISTRIBUTE.

STEP 7 - POSITION 1 LEVEL TOWER

Position the 1 Level Timber Tower on the foundation pad aligning it to the 2 Level Timber Tower as per the Layout this sheet.

STEP 8 - INSTALL 10' WOODEN BRIDGE

Install F00363 - Wooden Bridge 10' as per the separate installation package.

DO NOT ANCHOR TOWER TO THE FOUNDATION AT THIS TIME.

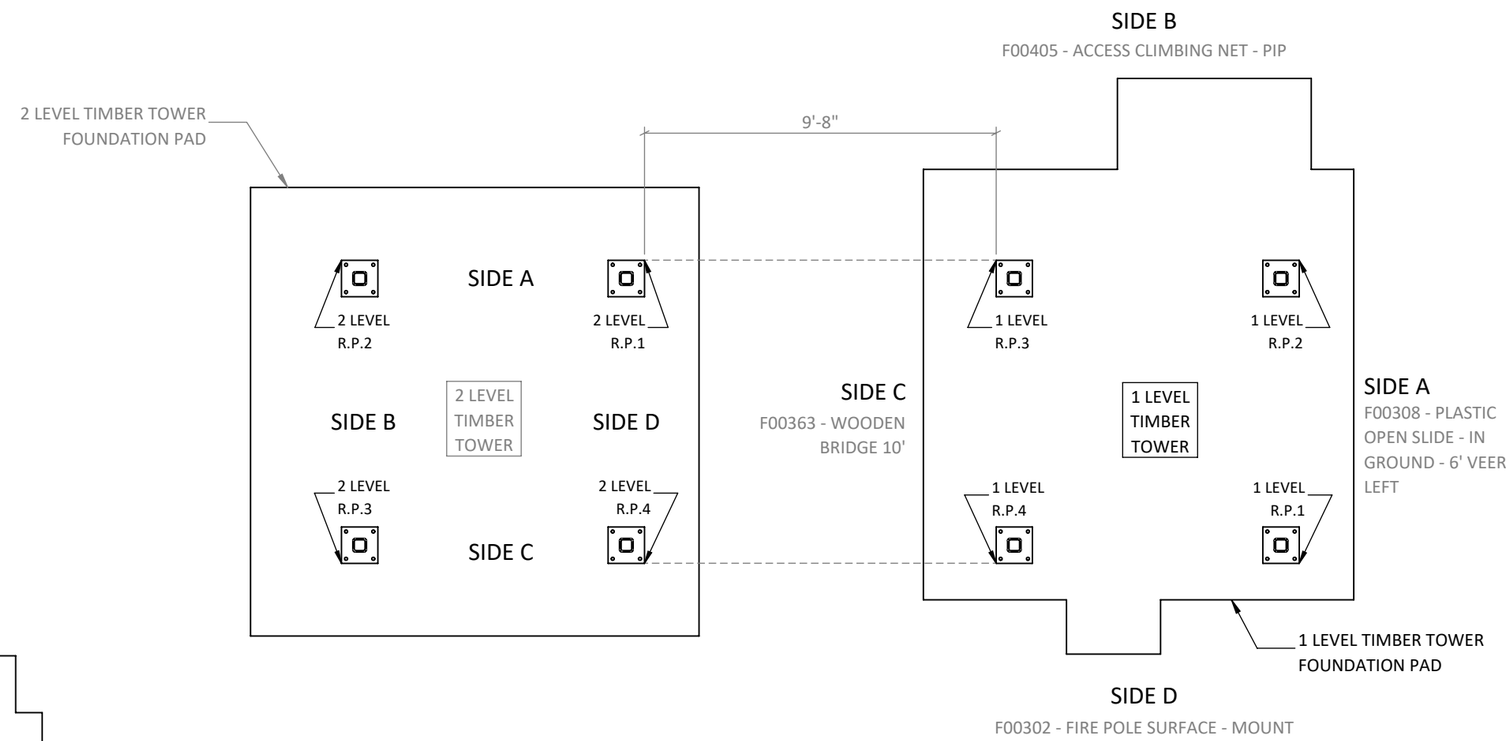

1 LEVEL TIMBER TOWER LAYOUT

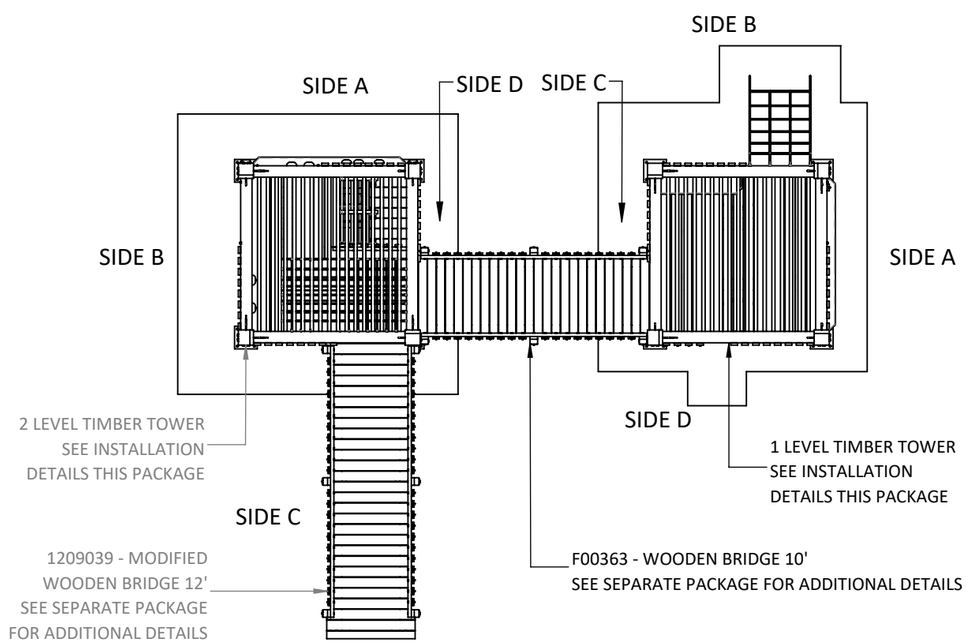

TOWER AT THE END OF STEP 8

PROPERTY OF EARTHSCAPE PLAY INC. - DO NOT COPY. DO NOT DISTRIBUTE.

STEP 9 - SECURE TOWERS TO FOUNDATION PAD

Secure both Timber Tower post base brackets to the concrete foundation pad as per SD-002B on this sheet.

Ensure excess threaded rod cut and ground after installation complete as noted on detail.

Anchoring of threaded rod with epoxy to be completed as per epoxy manufacturer's instructions.

MAINTAIN A MINIMUM ANCHOR ROD EDGE DISTANCE OF 100mm [4"].

HARDWARE REFERENCE LIST (PER CONNECTION)

ITEM NO.	PARTNO	DESCRIPTION	QTY.
1	H20019	Threaded Stud 3/4"-10 x 12" SS	4
2	H30047V	WASHER 3/4" X 1-3/4" SS	4
3	H40015	HEX NUT 3/4-10 SS	8

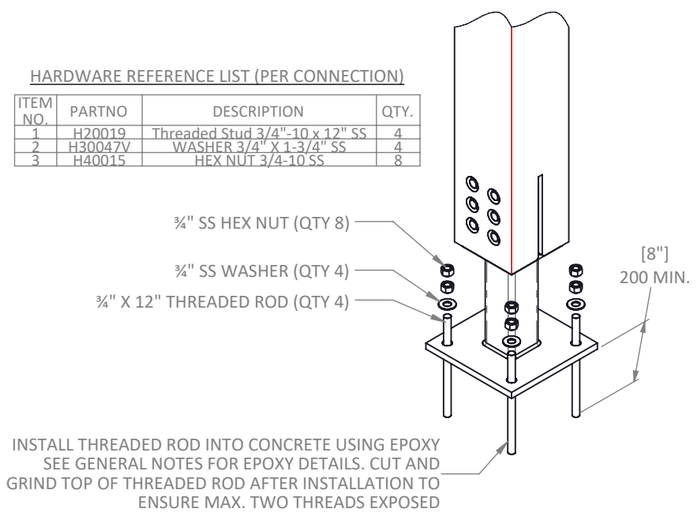

SD-002B

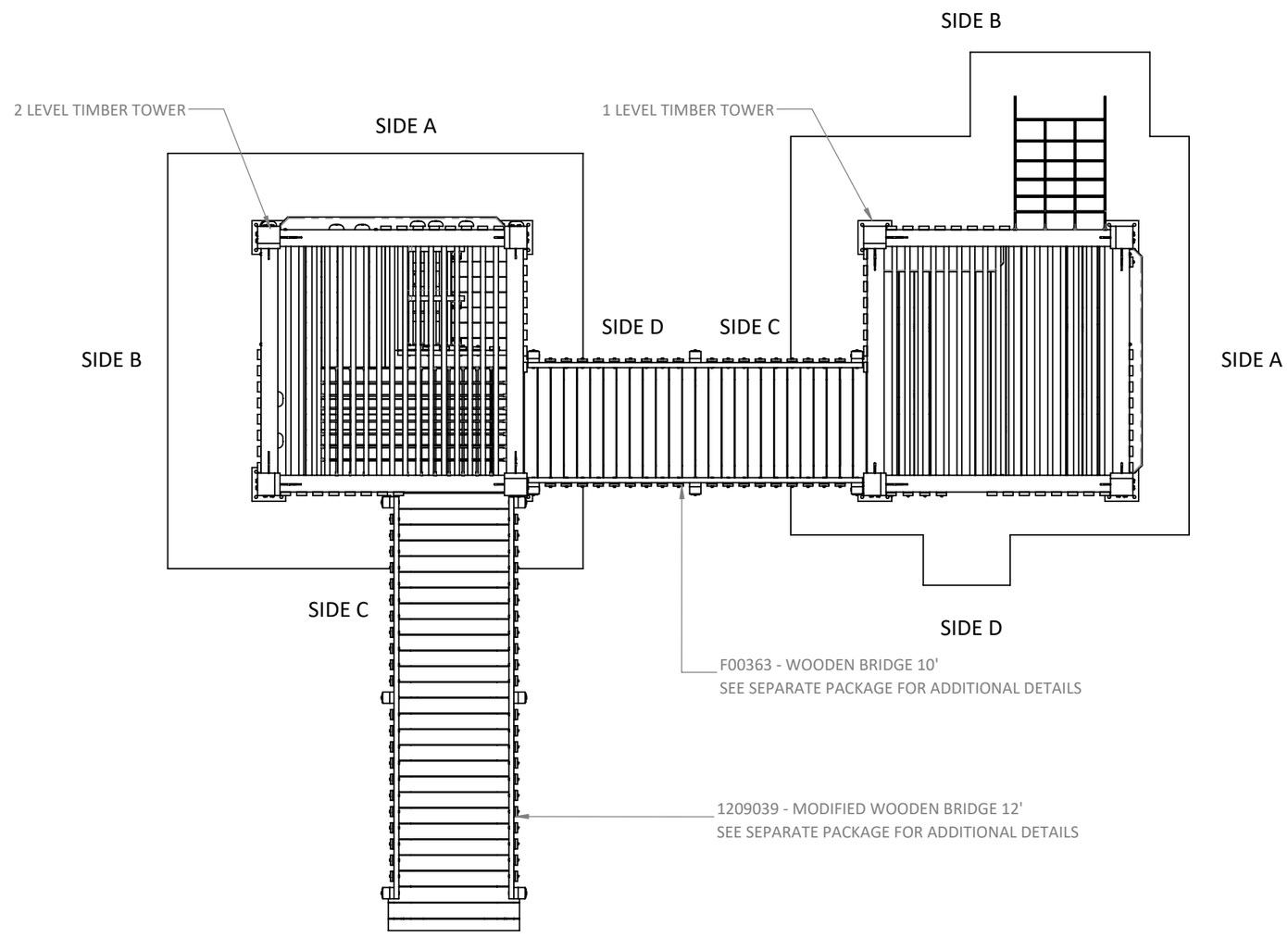

TOWER AT THE END OF STEP 9

PROPERTY OF EARTHSCAPE PLAY INC. - DO NOT COPY. DO NOT DISTRIBUTE.

STEP 10 - LOCATE AND INSTALL ADD-ONS

Refer to the layout drawing on this sheet to locate the add-ons relative to the timber towers.

Anchoring and other details relating to installation of the add-ons to be found in their separate installation packages.

1 LEVEL TIMBER TOWER ADD-ONS
F00302 - FILE POLE - SURFACE MOUNT - 6' PLATFORM
F00308 - PLASTIC OPEN SLIDE - IN GROUND - 6' - VEER LEFT
F00403 - SLING SEATS - PIP
F00405 - ACCESS CLIMBING NET - PIP

2 LEVEL TIMBER TOWER ADD-ONS
F00228 - CLADDED LADDER
F00316 - PLASTIC TUBE SLIDE - FLANGE - 12' - TURN RIGHT

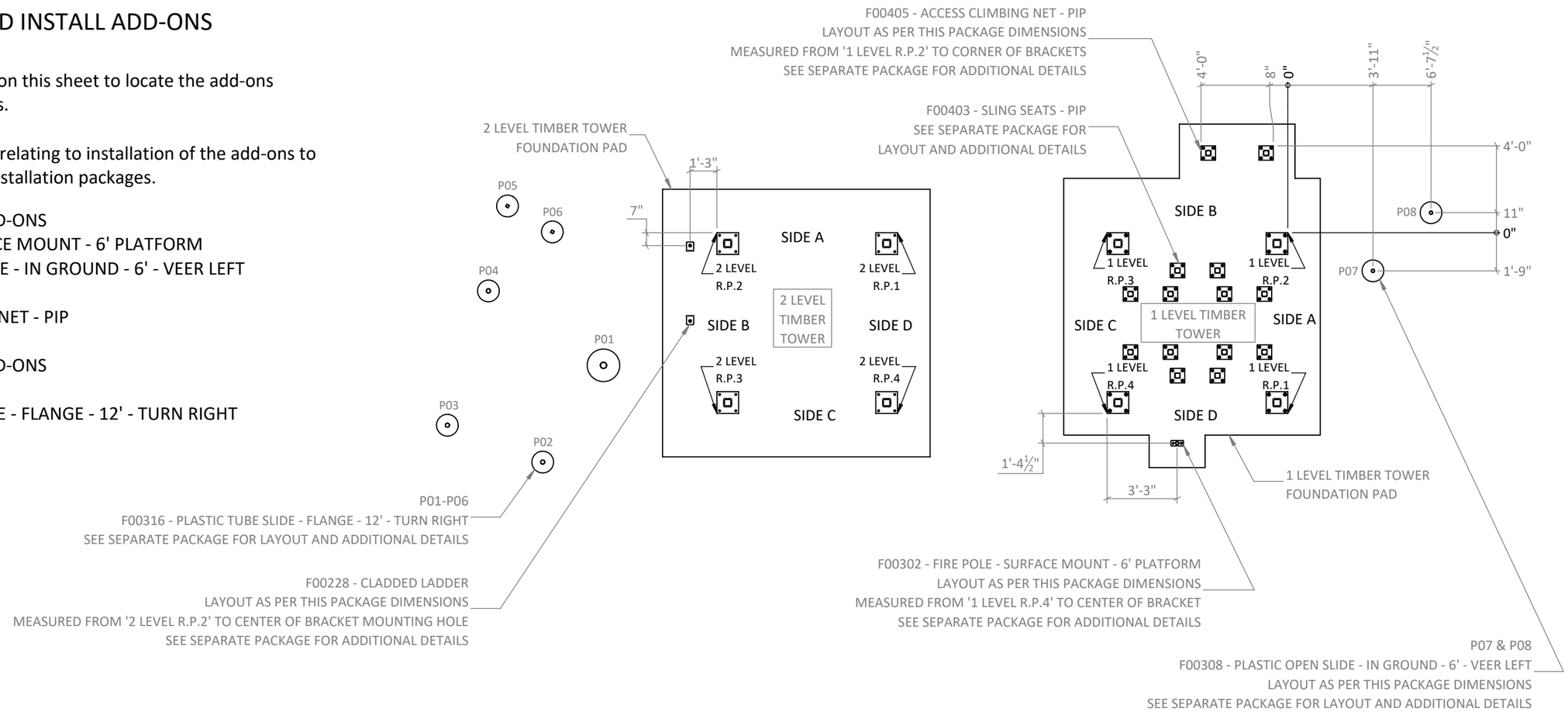

TOWER ADD-ON LAYOUT PLAN

PIER LAYOUT TABLE							
PIER I.D.	ADD-ON	PIER DIAMETER	PIER DEPTH	RAY FROM 1 LEVEL R.P.1	RAY FROM 1 LEVEL R.P.2	RAY FROM 1 LEVEL R.P.3	RAY FROM 1 LEVEL R.P.4
P07	F00308	∅1'-0"	5'-0"	7'-8"	4'-3½"	-	-
P08	F00308	∅1'-0"	5'-0"	11'-4½"	6'-8"	-	-

PROPERTY OF EARTHSCAPE PLAY INC. - DO NOT COPY. DO NOT DISTRIBUTE.

GENERAL NOTES

COMBINED ASSEMBLY

FOR CANADIAN INSTALLATION SITES USE THESE NOTES

GENERAL NOTES

1. THIS DRAWING IS THE PROPERTY OF EARTHSCAPE. DO NOT COPY OR DISTRIBUTE WITHOUT PERMISSION.
2. EARTHSCAPE RESERVES OWNERSHIP OF ALL DRAWINGS, SPECIFICATIONS, AND OTHER DOCUMENTS, INCLUDING THOSE IN ELECTRONIC FORM, AUTHORED BY EARTHSCAPE. UPON SIGNING CONTRACT, EARTHSCAPE GRANTS THE OWNER LIMITED LICENSE TO USE THE INSTRUMENTS OF SERVICE SOLELY FOR USING AND MAINTAINING, OR ADDING TO THE PROJECT
3. ENGINEERING AND STRUCTURAL REVIEW: EARTHSCAPE PROVIDES STAMPED DRAWINGS AND/OR STRUCTURAL LOAD TESTING FOR ONTARIO, AS REQUIRED BY CSA Z614. LOCAL ENGINEERING APPROVAL FOR JURISDICTIONS OUTSIDE ONTARIO, IF REQUIRED, TO BE PROVIDED BY OTHERS.
4. EARTHSCAPE DESIGNS AND ENGINEERS FOR A FROST PENETRATION DEPTH OF 1200mm. SLAB ON GRADE CONSTRUCTION IS SUBJECT TO FROST MOVEMENTS. FREE DRAINING SOIL UNDER THE FOOTING IS USED TO MINIMIZE FROST EFFECTS. OVERALL TOWER/SLAB MOVEMENT MAY OCCUR.
5. INSPECTION AND TESTING: INSPECTION, TESTING (INCLUDING CONCRETE TESTING), PRE-CONSTRUCTION SURVEYS TO BE COMPLETED BY OTHERS.
6. SURFACING: WHEN AN IMPACT-ABSORBING SURFACE MATERIAL IS REQUIRED, IT MUST COMPLY WITH CSA Z614 (MOST RECENT EDITION) FOR THE DEFINED FALL HEIGHT OF THE EQUIPMENT SPECIFIED IN DRAWINGS BY EARTHSCAPE OR A CONTRACTUALLY OBLIGATED CRITICAL HEIGHT SPECIFIED IN ADVANCE. ENSURE USE ZONES, SAFETY ZONES, AND/OR PROTECTIVE SURFACING ZONES AROUND ALL PLAY EQUIPMENT ARE COMPLIANT WITH CSA Z614 (MOST RECENT EDITION) - BY OTHERS.
7. SURVEY AND FACILITIES: SURVEY WORK INCLUDING BENCHMARKS, LINES AND LEVELS, PRE-CONSTRUCTION SURVEY, AS-BUILT DRAWINGS BY OTHERS
8. THESE DRAWINGS ARE INTENDED TO BE PRINTED AT 11" X 17" PAGE SIZE. DO NOT SCALE
9. ALL MEASUREMENTS ARE IN METRES (m) UNLESS OTHERWISE STATED
10. EQUIPMENT SHALL COMPLY WITH THE REQUIREMENTS OF CAN/CSA-Z614 (MOST RECENT EDITION) "CHILDREN'S PLAYSPACES AND EQUIPMENT"
11. VISUAL DETAILS INCLUDING BUT NOT LIMITED TO: NET SPACING, ROPE APPEARANCE AND COLOURS ARE FOR CONCEPTUAL PURPOSES ONLY
12. ALWAYS WEAR PROPER PPE AND FOLLOW SAFE PRACTICES.
13. ALL WORK SHALL BE COMPLETED IN ACCORDANCE WITH THE OCCUPATIONAL HEALTH AND SAFETY ACT.
14. CONTRACTOR IS RESPONSIBLE FOR CONFIRMING ALL SITE CONDITIONS AND REPORTING DISCREPANCIES TO EARTHSCAPE IMMEDIATELY.
15. EARTHSCAPE IS NOT RESPONSIBLE FOR THIRD PARTY USE OF THESE DRAWINGS

FASTENERS:

1. METRIC/IMPERIAL DIAMETER CONVERSIONS OF TYPICAL SIZES:
   1. 8mm=5/16", 10mm=3/8", 12mm=1/2", 25mm=1"
   2. ROUND UP TO NEAREST STANDARD LENGTH FOR MANUFACTURER
2. ALL FASTENERS ARE TO BE STAINLESS STEEL (UNLESS OTHERWISE NOTED)
3. ALL BOLT HOLES SHALL BE PRE-DRILLED AND SHALL BE NOT LESS THAN 1mm AND NOT GREATER THAN 2mm LARGER THAN THE NOMINAL HOLE DIAMETER
4. FOR PARTIALLY THREADED SCREWS, EMBED FULL THREAD INTO SECONDARY MEMBER OR TO A DEPTH AS SPECIFIED ON DRAWINGS.
5. WHERE PRE-DRILLING OF SCREWS IS RECOMMENDED BY THE SCREW MANUFACTURER, HOLE DIAMETER TO BE STRICTLY AS PER MANUFACTURER'S INSTRUCTIONS.
6. DO NOT USE IMPACT DRILLS FOR SCREW INSTALLATION.
7. DO NOT USE A HAMMER TO ENGAGE THE FASTENER WITH THE WOOD.
8. ALL FASTENERS TO BE INSTALLED AS POSITIONED ON DRAWINGS.
9. ALL BOLTED CONNECTIONS ARE TO BE SECURED USING VIBRA-TITE "VC-3" THREAD-LOCKING FLUID OR EQUIVALENT

EXCAVATION AND BACKFILL

1. STRIP ALL TOP SOIL, PAVING, AND DELETERIOUS MATERIAL FROM UNDER FOOTINGS.
2. LOCATE ALL SERVICES PRIOR TO COMPLETING EXCAVATION.
3. ALL FOOTINGS SHALL BE PLACED AT A MINIMUM OF 1200mm BELOW GRADE UNLESS OTHERWISE NOTED ON THE DRAWINGS.
4. SUPPORTING SUBGRADE AND FILL TO HAVE A MINIMUM BEARING CAPACITY OF 150 kPa.
5. ALL FOOTINGS AND SLABS TO BE PLACED ON EITHER NATIVE GRAVEL/SAND/CLAY OR 150mm OF GRANULAR A COMPACTED TO A MINIMUM STANDARD PROCTOR DRY DENSITY OF 98%.
6. BENEATH 150mm TOP LAYER OF COMPACTED GRANULAR A, GRANULAR B FILL CAN BE USED AS REQUIRED PLACED IN MAXIMUM 200mm LIFTS, COMPACTED TO A STANDARD PROCTOR DRY DENSITY OF 96%.
7. CONTRACTOR IS RESPONSIBLE FOR SUPPORT OF EXCAVATIONS DURING CONSTRUCTION AS REQUIRED.

CONCRETE

1. ALL CONCRETE WORK AND MATERIALS SHALL BE IN ACCORDANCE WITH CAN/CSA A23.1/2
2. ALL REINFORCING STEEL TO BE IN ACCORDANCE WITH CAN/CSA A23.1/2 INCLUDING FABRICATION, DETAILING, LAP SPLICES, PLACEMENT, FIXING AND COVER.
3. REINFORCING STEEL SHALL COMPLY WITH CAN/CSA G40.18
4. DO NOT ADD WATER TO CONCRETE ONSITE.
5. ENSURE A MINIMUM COVER OF 75mm TO THE GROUND IN ALL BELOW GRADE CONCRETE.
6. CONCRETE MATERIAL TO BE:
   1. FOOTINGS: CLASS F-2 CONCRETE WITH A MINIMUM 28 DAY COMPRESSIVE STRENGTH OF 25 MPa, MAXIMUM WATER/CEMENT RATIO OF 0.55, MAXIMUM COARSE AGGREGATE SIZE OF 20mm, 4-7% AIR CONTENT, AND A MAXIMUM SLUMP OF 50-100mm.
   2. SLAB ON GRADE: CLASS C-2 CONCRETE WITH A MINIMUM 28 DAY COMPRESSIVE STRENGTH OF 32 MPa, MAXIMUM WATER/CEMENT RATIO OF 0.45, MAXIMUM COARSE AGGREGATE SIZE OF 20mm, 5-8% AIR CONTENT AND A MAXIMUM SLUMP OF 50-100mm.
7. CONCRETE REINFORCING TO DEFORMED MINIMUM YIELD STRENGTH OF 400 MPa
8. PIT RUN GRAVEL WILL NOT BE ACCEPTABLE.
9. ALL REINFORCING CHAIRS SHALL BE PLASTIC
10. ALL FORM OIL TO BE NON-STAINING MINERAL OIL, FREE OF KEROSENE.
11. WELDED WIRE MESH SHALL BE IN ACCORDANCE WITH ASTM A1064.
12. VIBRATE ALL CONCRETE TO ENSURE THAT CONCRETE IS FREE FROM VOIDS AND OTHER DEFECTS.
13. MOIST CURE ALL CONCRETE 7 DAYS.
14. IN HOT OR COLD WEATHER CONDITIONS TAKE ADDITIONAL PRECAUTIONS AS PER CAN/CSA A23.1/2.
15. UNLESS NOTED OTHERWISE, FASTEN ALL HARDWARE TO CONCRETE USING EITHER:
    1. SIMPSON STRONG TIE "TITEN HD" Ø½ X 5" SS CONCRETE SCREW
    2. THREADED ROD WITH SIMPSON STRONG TIE "SET 3G" OR HILTI "HY-200" EPOXY.
    3. REFER TO RESPECTIVE MANUFACTURER's INSTRUCTIONS FOR INSTALLATION PROCEDURE

FOR U.S. INSTALLATION SITES USE THESE NOTES

GENERAL NOTES

1. THIS DRAWING IS THE PROPERTY OF EARTHSCAPE. DO NOT COPY OR DISTRIBUTE WITHOUT PERMISSION.
2. EARTHSCAPE RESERVES OWNERSHIP OF ALL DRAWINGS, SPECIFICATIONS, AND OTHER DOCUMENTS, INCLUDING THOSE IN ELECTRONIC FORM, AUTHORED BY EARTHSCAPE. UPON SIGNING CONTRACT, EARTHSCAPE GRANTS THE OWNER LIMITED LICENSE TO USE THE INSTRUMENTS OF SERVICE SOLELY FOR USING AND MAINTAINING, OR ADDING TO THE PROJECT
3. ENGINEERING AND STRUCTURAL REVIEW: EARTHSCAPE PROVIDES STAMPED DRAWINGS AND/OR STRUCTURAL LOAD TESTING FOR ONTARIO, AS REQUIRED BY ASTM F-1487-17. LOCAL ENGINEERING APPROVAL FOR JURISDICTIONS OUTSIDE ONTARIO, IF REQUIRED, TO BE PROVIDED BY OTHERS.
4. EARTHSCAPE DESIGNS AND ENGINEERS FOR A FROST PENETRATION DEPTH OF 48". SLAB ON GRADE CONSTRUCTION IS SUBJECT TO FROST MOVEMENTS. FREE DRAINING SOIL UNDER THE FOOTING IS USED TO MINIMIZE FROST EFFECTS. OVERALL TOWER/SLAB MOVEMENT MAY OCCUR.
5. INSPECTION AND TESTING: INSPECTION, TESTING (INCLUDING CONCRETE TESTING), PRE-CONSTRUCTION SURVEYS TO BE COMPLETED BY OTHERS.
6. SURFACING: WHEN AN IMPACT-ABSORBING SURFACE MATERIAL IS REQUIRED, IT MUST COMPLY WITH ASTM F-1292 (MOST RECENT EDITION) FOR THE DEFINED FALL HEIGHT OF THE EQUIPMENT SPECIFIED IN DRAWINGS BY EARTHSCAPE OR A CONTRACTUALLY OBLIGATED CRITICAL HEIGHT SPECIFIED IN ADVANCE. ENSURE USE ZONES, SAFETY ZONES, AND/OR PROTECTIVE SURFACING ZONES AROUND ALL PLAY EQUIPMENT ARE COMPLIANT WITH ASTM F-1292 (MOST RECENT EDITION) - BY OTHERS.
7. SURVEY AND FACILITIES: SURVEY WORK INCLUDING BENCHMARKS, LINES AND LEVELS, PRE-CONSTRUCTION SURVEY, AS-BUILT DRAWINGS BY OTHERS
8. THESE DRAWINGS ARE INTENDED TO BE PRINTED AT 11" X 17" PAGE SIZE. DO NOT SCALE
9. ALL MEASUREMENTS ARE IN FEET-INCHES UNLESS OTHERWISE STATED
10. EQUIPMENT SHALL COMPLY WITH THE REQUIREMENTS OF ASTM F1487-17 "STANDARD CONSUMER SAFETY PERFORMANCE SPECIFICATION FOR PLAYGROUND EQUIPMENT"
11. VISUAL DETAILS INCLUDING BUT NOT LIMITED TO: NET SPACING, ROPE APPEARANCE AND COLOURS ARE FOR CONCEPTUAL PURPOSES ONLY
12. ALWAYS WEAR PROPER PPE AND FOLLOW SAFE PRACTICES.
13. ALL WORK SHALL BE COMPLETED IN ACCORDANCE WITH THE OCCUPATIONAL HEALTH AND SAFETY ACT.
14. CONTRACTOR IS RESPONSIBLE FOR CONFIRMING ALL SITE CONDITIONS AND REPORTING DISCREPANCIES TO EARTHSCAPE IMMEDIATELY.
15. EARTHSCAPE IS NOT RESPONSIBLE FOR THIRD PARTY USE OF THESE DRAWINGS

FASTENERS

1. METRIC/IMPERIAL DIAMETER CONVERSIONS:
   1. 8mm=5/16", 10mm=3/8", 12mm=1/2", 25mm=1"
   2. ROUND UP TO NEAREST STANDARD LENGTH FOR MANUFACTURER
2. ALL FASTENERS ARE TO BE STAINLESS STEEL (UNLESS OTHERWISE NOTED)
3. ALL BOLT HOLES SHALL BE PRE-DRILLED AND SHALL BE NOT LESS THAN 3/64" AND NOT GREATER THAN 5/64" LARGER THAN THE NOMINAL HOLE DIAMETER
4. FOR PARTIALLY THREADED SCREWS, EMBED FULL THREAD INTO SECONDARY MEMBER OR TO A DEPTH AS SPECIFIED ON DRAWINGS.
5. WHERE PRE-DRILLING OF SCREWS IS RECOMMENDED BY THE SCREW MANUFACTURER, HOLE DIAMETER TO BE STRICTLY AS PER MANUFACTURER'S RECOMMENDATIONS.
6. DO NOT USE IMPACT DRILLS FOR SCREW INSTALLATION.
7. DO NOT USE A HAMMER TO ENGAGE THE FASTENER WITH THE WOOD.
8. ALL FASTENERS TO BE INSTALLED AS POSITIONED ON SHOP DRAWINGS.
9. ALL BOLTED CONNECTIONS ARE TO BE SECURED USING VIBRA-TITE "VC-3" THREAD-LOCKING FLUID OR EQUIVALENT

EXCAVATION AND BACKFILL

1. STRIP ALL TOP SOIL, PAVING, AND DELETERIOUS MATERIAL FROM UNDER FOOTINGS.
2. LOCATE ALL SERVICES PRIOR TO COMPLETING EXCAVATION.
3. ALL FOOTINGS SHALL BE PLACED AT A MINIMUM OF 4' BELOW GRADE UNLESS OTHERWISE NOTED ON THE DRAWINGS.
4. SUPPORTING SUBGRADE AND FILL TO HAVE A MINIMUM BEARING CAPACITY OF 3000PSF.
5. ALL FOOTINGS AND SLABS TO BE PLACED ON EITHER NATIVE GRAVEL/SAND/CLAY OR 6" OF GRANULAR A COMPACTED TO A MINIMUM STANDARD PROCTOR DRY DENSITY OF 98%.
6. BENEATH 6" TOP LAYER OF COMPACTED GRANULAR A, GRANULAR B FILL CAN BE USED AS REQUIRED PLACED IN MAXIMUM 8" LIFTS, COMPACTED TO A STANDARD PROCTOR DRY DENSITY OF 96%.
7. CONTRACTOR IS RESPONSIBLE FOR SUPPORT OF EXCAVATIONS DURING CONSTRUCTION AS REQUIRED.

CONCRETE

1. ALL CONCRETE WORK AND MATERIALS SHALL BE IN ACCORDANCE WITH ACI-301
2. ALL REINFORCING STEEL TO BE IN ACCORDANCE WITH ASTM A615 AND ACI-301 INCLUDING FABRICATION, DETAILING, LAP SPLICES, PLACEMENT, FIXING AND COVER.
3. REINFORCING STEEL SHALL COMPLY WITH ASTM A615
4. DO NOT ADD WATER TO CONCRETE ONSITE.
5. ENSURE A MINIMUM COVER OF 3" TO THE GROUND IN ALL BELOW GRADE CONCRETE.
6. CONCRETE MATERIAL TO BE:
   1. FOOTINGS AND SLABS: CONCRETE WITH A MINIMUM 28 DAY COMPRESSIVE STRENGTH OF 4000 PSI, MAXIMUM WATER/CEMENT RATIO OF 0.50, MAXIMUM COARSE AGGREGATE SIZE OF 3/4", 4-7% AIR CONTENT (WHERE CONCRETE PLACED ABOVE FROST), AND A MAXIMUM SLUMP OF 2 - 4 INCHES.
7. CONCRETE REINFORCING TO DEFORMED MINIMUM YIELD STRENGTH OF 58000 PSI
8. PIT RUN GRAVEL WILL NOT BE ACCEPTABLE.
9. ALL REINFORCING CHAIRS SHALL BE PLASTIC
10. ALL FORM OIL TO BE NON-STAINING MINERAL OIL, FREE OF KEROSENE.
11. WELDED WIRE MESH SHALL BE IN ACCORDANCE WITH ASTM A1064.
12. VIBRATE ALL CONCRETE TO ENSURE THAT CONCRETE IS FREE FROM VOIDS AND OTHER DEFECTS.
13. MOIST CURE ALL CONCRETE 7 DAYS.
14. IN HOT OR COLD WEATHER CONDITIONS TAKE ADDITIONAL PRECAUTIONS AS PER ACI 305 OR 306 RESPECTIVELY.
15. UNLESS NOTED OTHERWISE, FASTEN ALL HARDWARE TO CONCRETE USING EITHER:
    1. SIMPSON STRONG TIE "TITEN HD" Ø½ X 5" SS CONCRETE SCREW
    2. THREADED ROD WITH SIMPSON STRONG TIE "SET 3G" OR HILTI "HY-200" EPOXY
    3. REFER TO RESPECTIVE MANUFACTURER'S INSTRUCTIONS FOR INSTALLATION PROCEDURE
    4.

PROPERTY OF EARTHSCAPE PLAY INC. - DO NOT COPY. DO NOT DISTRIBUTE.

INSTALLATION INSTRUCTIONS

EARTHSCAPE COLLECTIONS

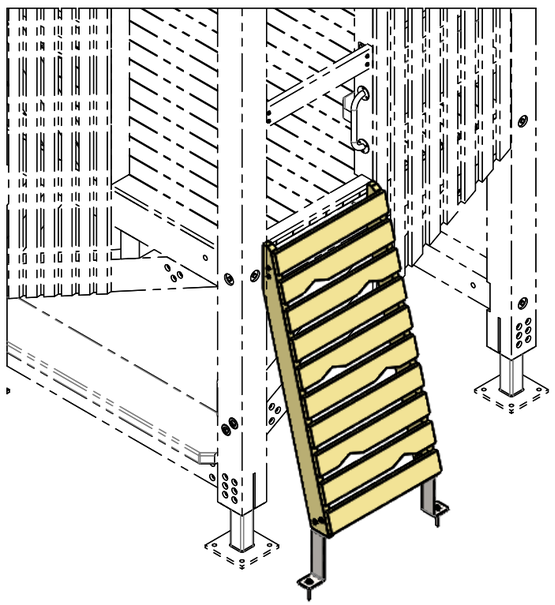

LICENSED PROFESSIONAL ENGINEER
M. JOHNSON
100514620
Sep 22, 2025
PROVINCE OF ONTARIO

WITZEL DYCE
ENGINEERING INC.
PROJECT NO.: 12936-165

CLADDING LADDER

THESE INSTRUCTIONS APPLY TO THE FOLLOWING VERSIONS OF THIS PRODUCT:

F00228 - CLADDING LADDER

WHICH IS DESIGNED TO BE INSTALLED ON THE FOLLOWING PRODUCTS:

1 LEVEL TIMBER TOWER
2 LEVEL TIMBER TOWER
3 LEVEL TIMBER TOWER

NOTE: COLOURS SHOWN ARE REPRESENTATIONAL AND MAY NOT BE THE SAME AS THOSE OF THE SUPPLIED PRODUCT

FOR CSA AND ASTM SPECIFICATIONS AND GENERAL NOTES SEE MAIN STRUCTURE INSTALLATION PACKAGE

PROPERTY OF EARTHSCAPE PLAY INC. - DO NOT COPY. DO NOT DISTRIBUTE.

PLEASE READ ALL INSTRUCTIONS

Before starting to install this equipment be sure to read through and understand these instructions.

If you have any questions, contact your local dealer for assistance before proceeding.

MEASUREMENTS AND STANDARDS

Measurements have been provided in both metres and [feet-inches]. Ensure to follow standards noted for the location in which this play equipment is being installed. Those marked CSA are to be used in Canada and those marked ASTM to be used in the United States.

LIST OF ABBREVIATIONS

AYC = Alaskan Yellow Cedar
WRC = Western Red Cedar
DPS = Designated Play Surface
SS = Stainless Steel
HDG = Hot Dipped Galvanized
WWM = Welded Wire Mesh
TYP = Typical
C/W = Complete With
UNO = Unless Noted Otherwise
EWF = Engineered Wood Fiber
PIP = Poured-In-Place Rubber Surfacing
PT = Pressure Treated

TOOLS SUPPLIED WITH THIS PRODUCT

- No tools supplied

TOOLS THE INSTALLER NEEDS TO SUPPLY

- High torque drill
- 1/2" impact driver
- Set of wood drill bits - up to 1/2"
- Set of impact sockets - up to 1"
- 1/2" ratcheting socket wrench
- T25 drive bit
- T40 drive bit
- Hammer drill
- Concrete drill bit, 1/2" x 8"

EQUIPMENT THE INSTALLER NEEDS TO SUPPLY

- No special equipment required

INSTALLER CREW AND TIME REQUIRED

Number of people needed: 2
Typical total person-hours to install: 2
Time breakdown:

- 1 hours x 2 people to position and anchor the ladder in place

MATERIALS THE INSTALLER NEEDS TO SUPPLY

No additional materails required

WARNINGS

These instructions do not provide specific guidance on the use of tools or the lifting and moving heavy objects. It is assumed that competent people are installing this product who are familiar with using the tools and equipment required and are knowledgeable and skilled at lifting and positioning heavy objects.

PROPERTY OF EARTHSCAPE PLAY INC. - DO NOT COPY. DO NOT DISTRIBUTE.

MAKE SURE YOU HAVE ALL THE PARTS

Examine the equipment and ensure you have all the required parts listed in the table below.

PART IMAGE	ITEM NO.	PART NO.	DESCRIPTION	QTY.
	1	H30059	WASHER 5/8" X 1-1/2" SS	2
	2	H60020	TITEN HD 1/2" X 5" CONCRETE SCREW	2
	3	H16715	WOOD SCREW, WASHER HEAD, M8x80, SS	4
SEE IMAGE THIS SHEET	4		PRE-ASSEMBLED CLADDING LADDER	1

IMAGES OF FASTENERS IN THIS TABLE ARE REPRESENTATIONAL TO HELP IDENTIFY PARTS.

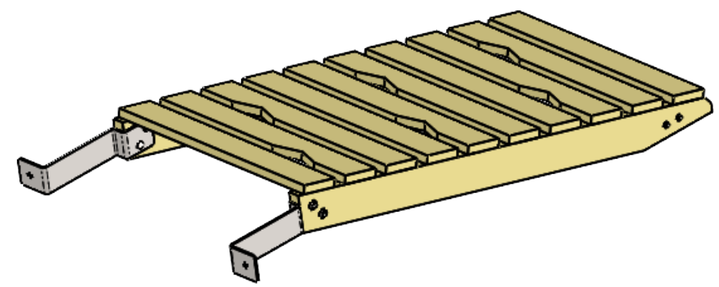

4 PRE-ASSEMBLED CLADDING LADDER

PROPERTY OF EARTHSCAPE PLAY INC. - DO NOT COPY. DO NOT DISTRIBUTE.

CLADDED LADDER INSTALLATION

CLADDING LADDER

STEP 1 - CONFIRM WHERE THE ACCESSORY IS TO BE INSTALLED

Review the complete tower installation package to determine on which side this accessory is to be installed and what the finished product should look like. The images shown on this page are representational and may not match your exact installation.

STEP 2 - POSITION LADDER

Align ladder with correct opening and position so top of ladder is flush with top of grab rail noted in Section A-A this sheet

Bottom of ladder should be located as per dimension noted in Section A-A

STEP 3 - SECURE TOP OF LADDER TO TOWER

You will need to remove the top one or two boards from the ladder to access the attachment brackets. Make sure to save screws and boards to be reinstalled after ladder secured.

Pre-drill holes for screws then screw brackets to timber beam as per Detail B this sheet.

Reinstall removed boards.

STEP 4 - SECURE LADDER BASE BRACKETS TO CONCRETE PAD

Confirm bottom of ladder is still in the correct location as per Step 2, then pre-drill holes in concrete pad and anchor the base bracket to the pad as per Detail C this sheet.

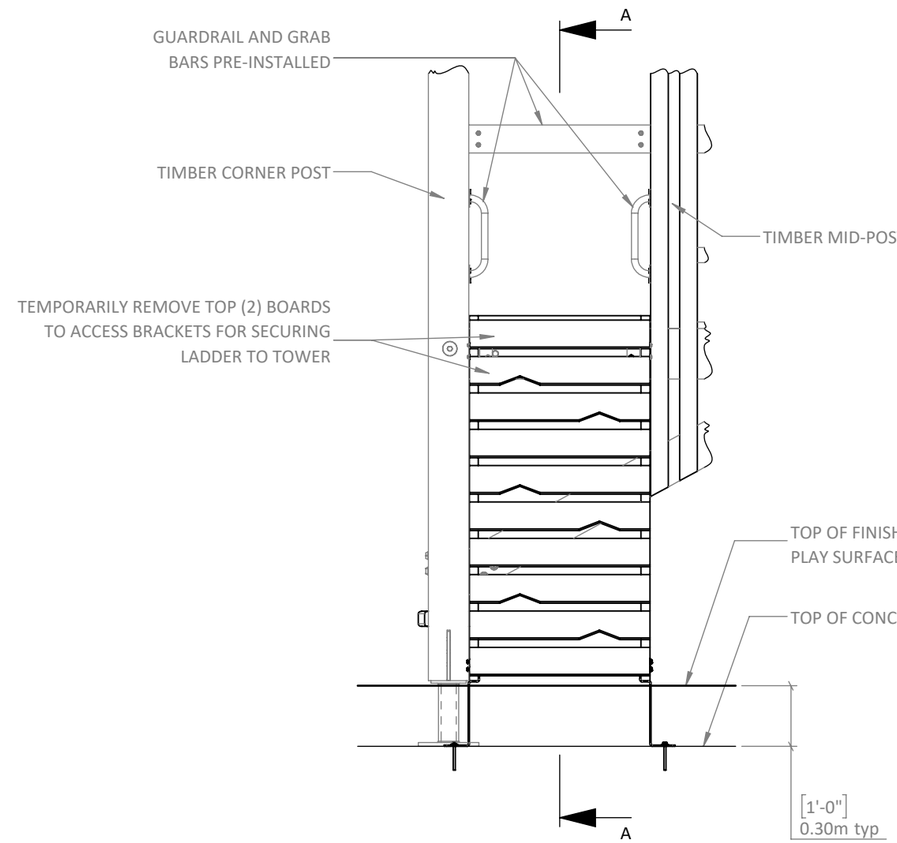

SAMPLE ELEVATION

(ACTUAL INSTALLATION MIGHT BE A MIRRORED VERSION OF THIS VIEW)

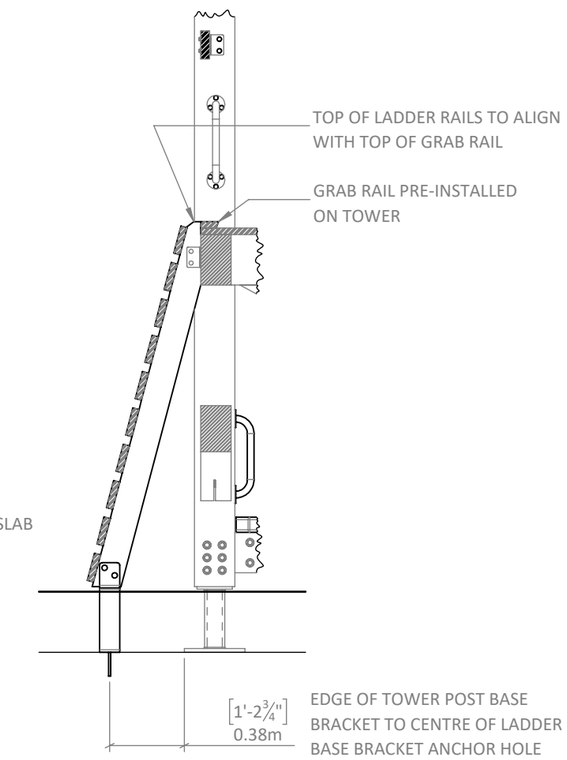

SECTION A-A

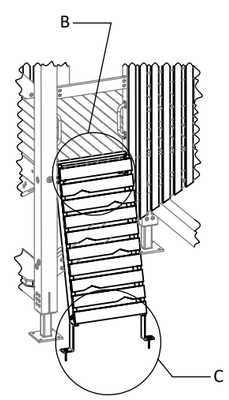

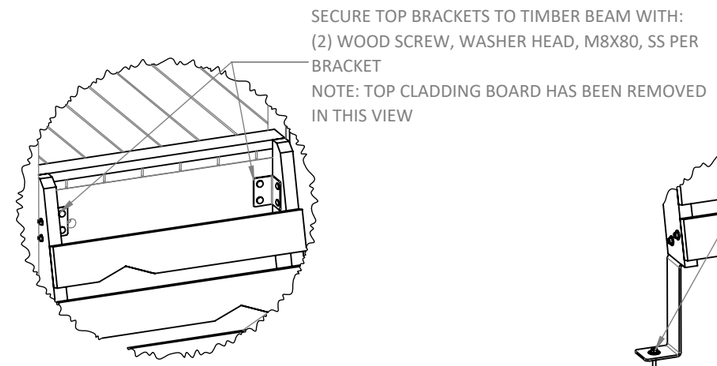

DETAIL B

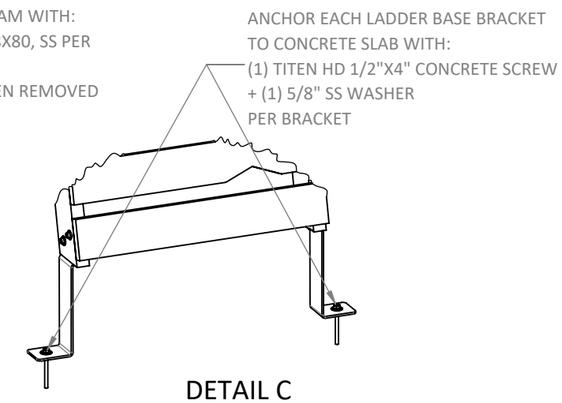

DETAIL C

PROPERTY OF EARTHSCAPE PLAY INC. - DO NOT COPY. DO NOT DISTRIBUTE.

INSTALLATION INSTRUCTIONS

EARTHSCAPE COLLECTIONS

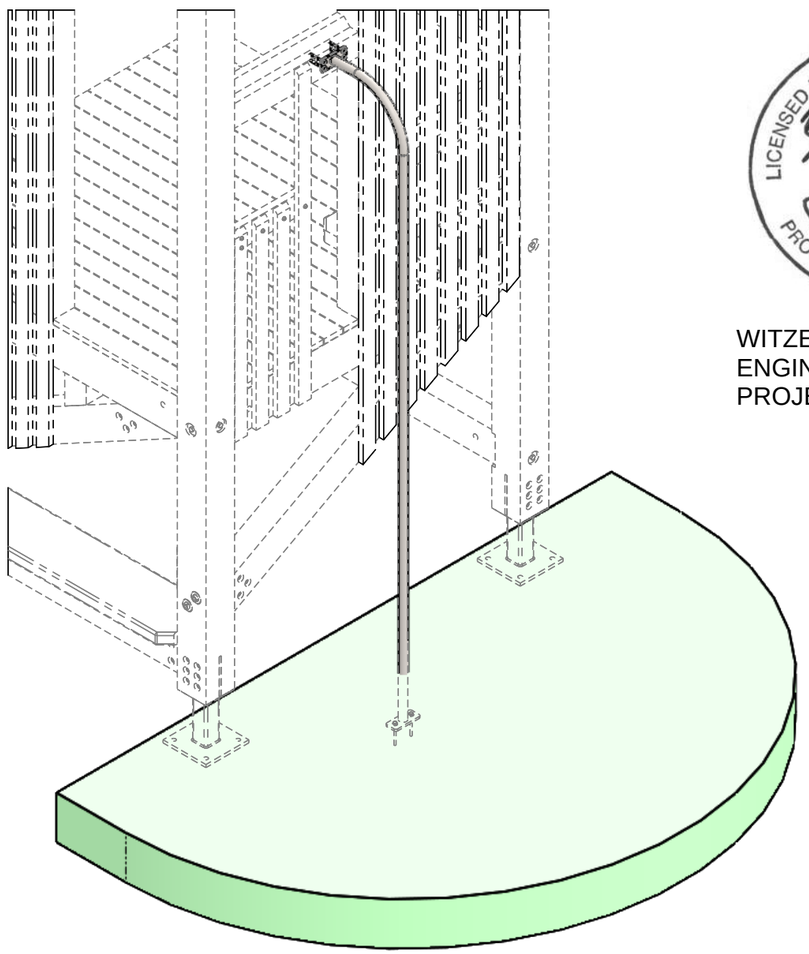

WITZEL DYCE
ENGINEERING INC.
PROJECT NO.: 12936-165

FIRE POLE

THESE INSTRUCTIONS APPLY TO THE FOLLOWING VERSIONS OF THIS PRODUCT:

F00302 - FIRE POLE - SURFACE MOUNT - 6' PLATFORM

WHICH IS DESIGNED TO BE INSTALLED ON THE FOLLOWING PRODUCTS:

1 LEVEL TIMBER TOWERS
2 LEVEL TIMBER TOWER
3 LEVEL TIMBER TOWER

NOTE: COLOURS SHOWN ARE REPRESENTATIONAL AND MAY NOT BE THE SAME AS THOSE OF THE SUPPLIED PRODUCT

FOR CSA AND ASTM SPECIFICATIONS AND GENERAL NOTES SEE MAIN STRUCTURE INSTALLATION PACKAGE

DATE DOCUMENT RELEASED 2024-06-17
DOCUMENT NUMBER: 1051479-R4

PROPERTY OF EARTHSCAPE PLAY INC. - DO NOT COPY. DO NOT DISTRIBUTE.

PLEASE READ ALL INSTRUCTIONS

Before starting to install this equipment be sure to read through and understand these instructions.
If you have any questions, contact your local dealer for assistance before proceeding.

MEASUREMENTS AND STANDARDS

Measurements have been provided in both metres and [feet-inches]. Ensure to follow standards noted for the location in which this play equipment is being installed. Those marked CSA are to be used in Canada and those marked ASTM to be used in the United States.

LIST OF ABBREVIATIONS

AYC = Alaskan Yellow Cedar
WRC = Western Red Cedar
DPS = Designated Play Surface
SS = Stainless Steel
HDG = Hot Dipped Galvanized
WWM = Welded Wire Mesh
TYP = Typical
C/W = Complete With
UNO = Unless Noted Otherwise
EWF = Engineered Wood Fiber
PIP = Poured-In-Place Rubber Surfacing
PT = Pressure Treated

TOOLS SUPPLIED WITH THIS PRODUCT

- No tools supplied

TOOLS THE INSTALLER NEEDS TO SUPPLY

- High torque drill
- Set of wood drill bits - up to 1/2"
- 1/2" impact driver
- Set of impact sockets - up to 1"
- 1/2" ratcheting socket wrench
- T25 drive bit
- T40 drive bit
- Hammer drill
- Concrete drill bit, 1/2" x 8"

EQUIPMENT THE INSTALLER NEEDS TO SUPPLY

- No special equipment required

INSTALLER CREW AND TIME REQUIRED

Number of people needed: 2
Typical total person-hours to install: 2
Time breakdown:

- 1 hour x 2 to position and anchor the fire pole

MATERIALS THE INSTALLER NEEDS TO SUPPLY

- No special materials required

WARNINGS

These instructions do not provide specific guidance on the use of tools or the lifting and moving heavy objects. It is assumed that competent people are installing this product who are familiar with using the tools and equipment required and are knowledgeable and skilled at lifting and positioning heavy objects.

PROPERTY OF EARTHSCAPE PLAY INC. - DO NOT COPY. DO NOT DISTRIBUTE.

MAKE SURE YOU HAVE ALL THE PARTS

Examine the equipment and ensure you have all the required parts listed in the table below.

PART IMAGE	ITEM NO.	PART NO.	DESCRIPTION	QTY.
SEE IMAGE THIS SHEET	1	B00089	FIRE POLE - SURFACE MOUNT	1
	2	H60020	Titen HD 1/2" x 5" Concrete Screw SS	2
	3	H16685	ASSY SK A2 8mm X 100mm SS	4

IMAGES OF FASTENERS IN THIS TABLE ARE REPRESENTATIONAL TO HELP IDENTIFY PARTS.

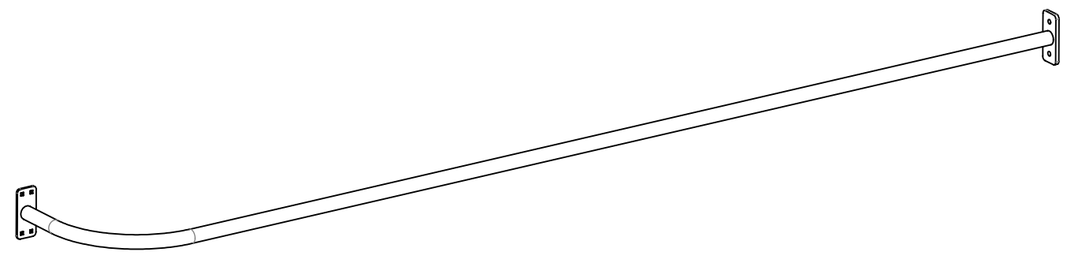

1 FIRE POLE - SURFACE MOUNT

PROPERTY OF EARTHSCAPE PLAY INC. - DO NOT COPY. DO NOT DISTRIBUTE.

FIRE POLE INSTALLATION

STEP 1 - CONFIRM WHERE THE ACCESSORY IS TO BE INSTALLED

Review the complepte tower installation package to determine on which side this accessory is to be installed and what the finished product should look like. The images shown on this page are representational and may not match your exact installation. Your installation could be a mirror image of what is shown on this sheet.

STEP 2 - LAYOUT LOCATION OF FIRE POLE

Mark the centre of the upper opening on the timber where the Fire Pole Top Plate will be secured as per Detail B

Mark the target location on the concrete pad for the centre of the Fire Pole Base Flange relative the the timber tower post base plates as shown in the Sample Elevation and Section A-A.

STEP 3 - ROUGH ALIGNMENT OF FIRE POLE

Align the top mounting plate of fire pole to the upper centre mark and temporarily hold in place.

Align the centre of the Base Flange with the mark on the concrete foundation pad and then check to ensure Fire Pole is plumb and the bottom mounting plate is resting flat on the concrete pad.

STEP 4 - ANCHOR FIRE POLE TO TOWER AND PAD

Secure the top plate to timber beam with screws as shown in Detail B. Predrill all screw holes as per manufacturer's instructions.

Secure base flange to concrete slab as noted in Sample Elevation.

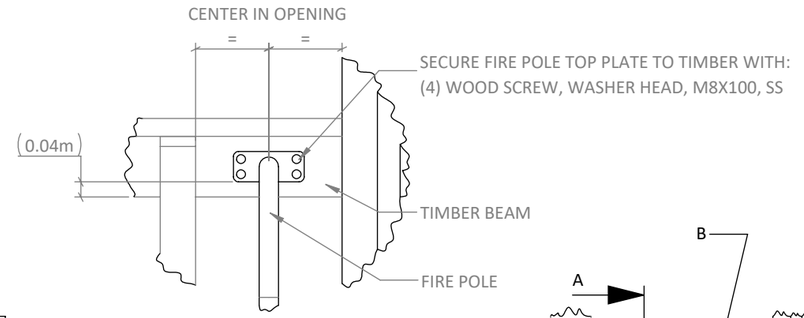

DETAIL B

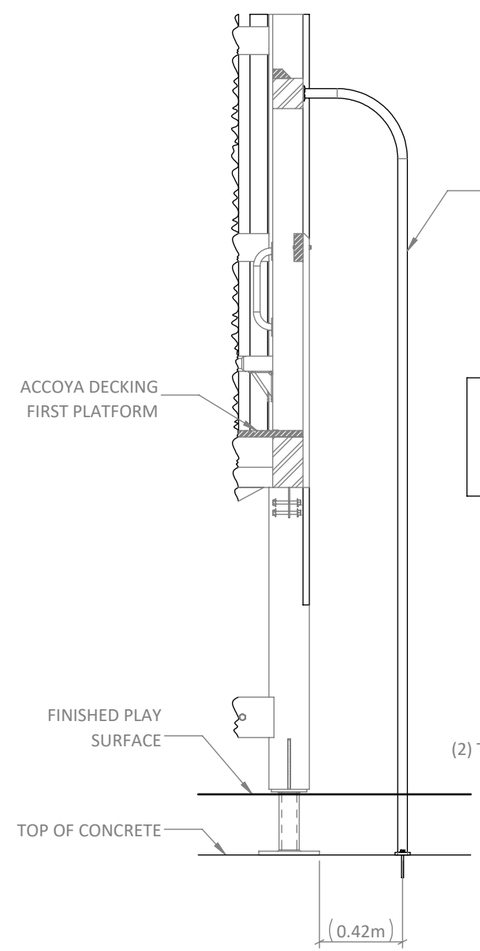

SECTION A-A

DIMENSIONS IN PARENTHESIS ARE APPROXIMATE. MINOR ADJUSTMENT MIGHT BE REQUIRED TO ENSURE FIRE POLE IS PLUMB AND BASE FLANGE RESTING ON CONCRETE PAD

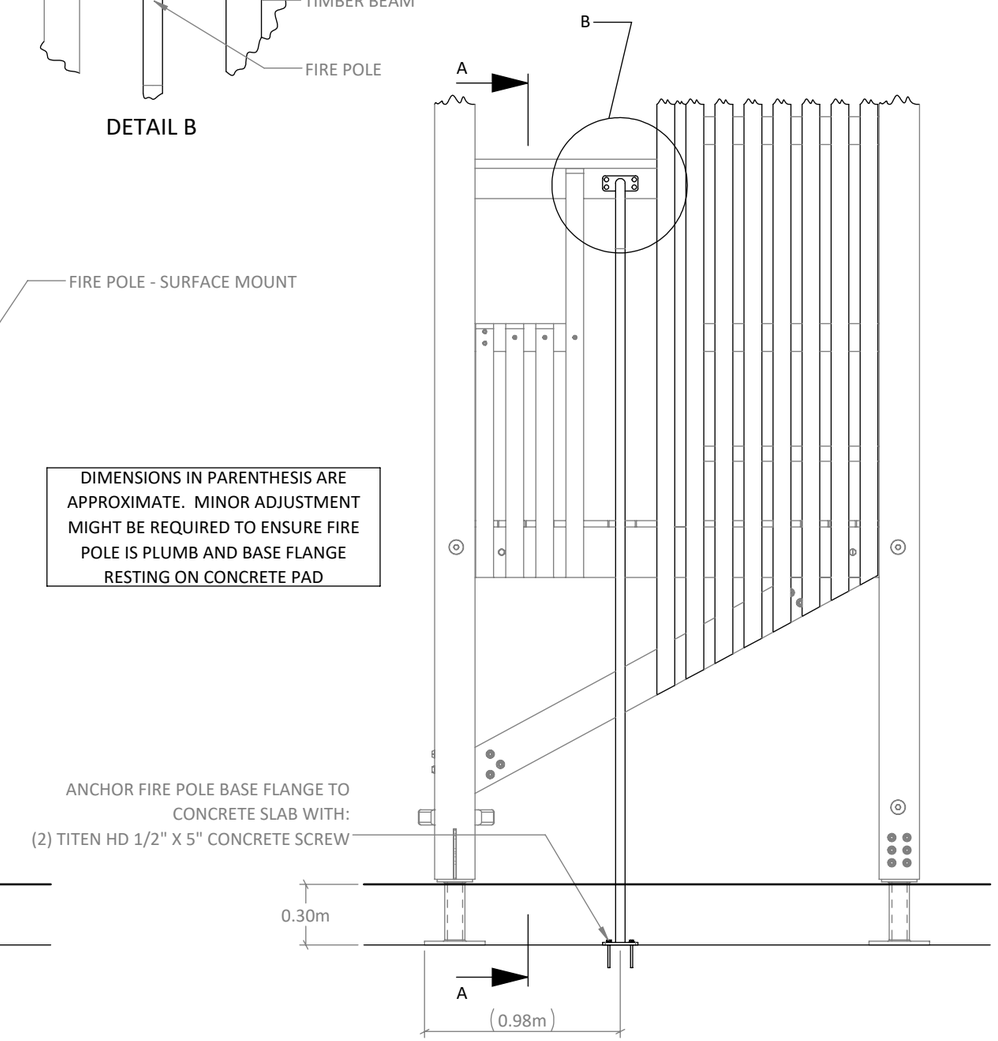

SAMPLE ELEVATION
(ACTUAL INSTALLATION MIGHT BE A MIRRORED VERSION OF THIS VIEW)

PROPERTY OF EARTHSCAPE PLAY INC. - DO NOT COPY. DO NOT DISTRIBUTE.

INSTALLATION INSTRUCTIONS

EARTHSCAPE COLLECTIONS

LICENSED PROFESSIONAL ENGINEER
M. JOHNSON
100514620
Sep 22, 2025
PROVINCE OF ONTARIO

WITZEL DYCE
ENGINEERING INC.
PROJECT NO.: 12936-165

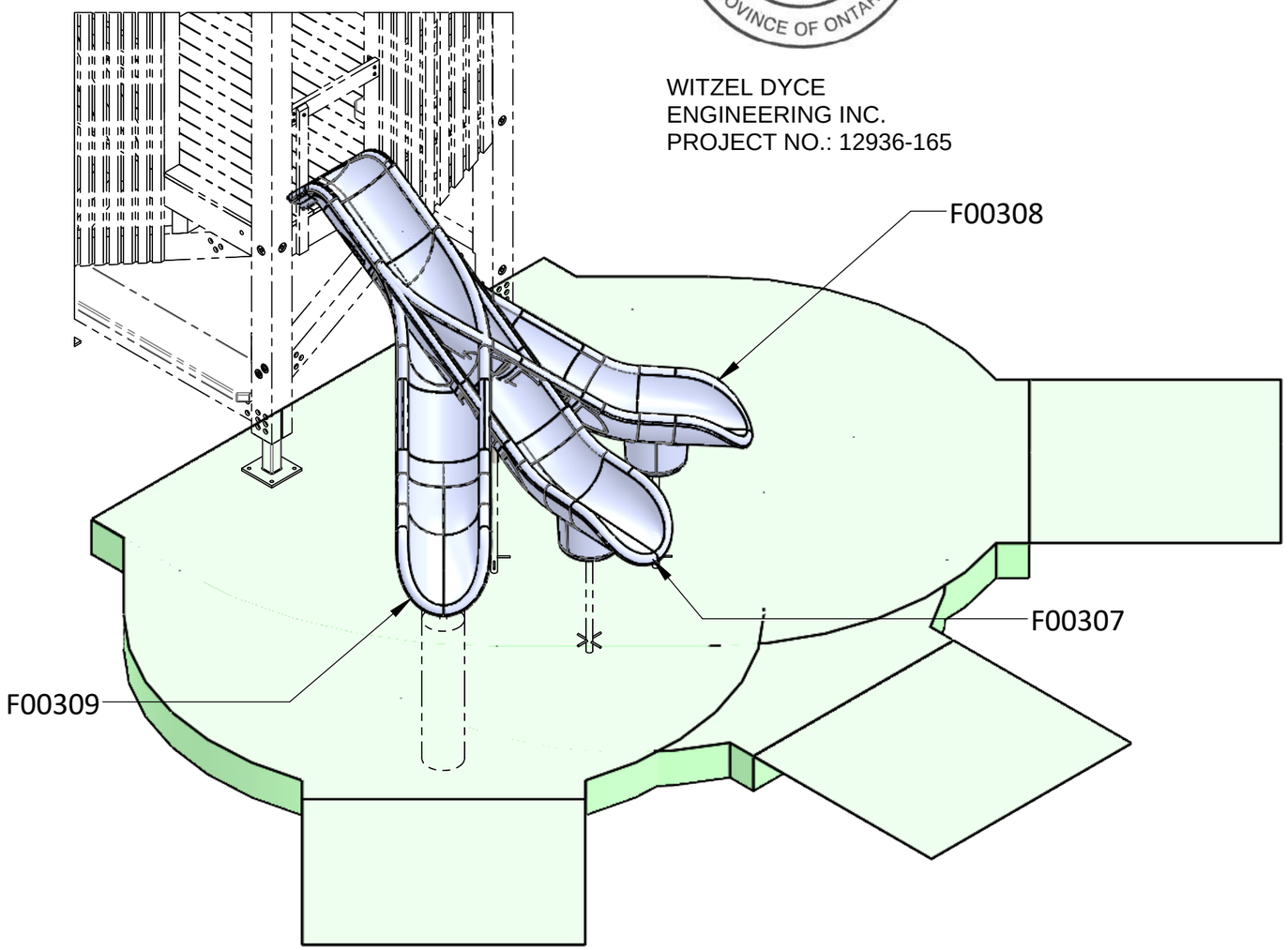

OPEN SLIDES - STARGLIDE

THESE INSTRUCTIONS APPLY TO THE FOLLOWING VERSIONS OF THIS PRODUCT:

F00307 - STARGLIDE 6' OPEN STRAIGHT SLIDE
F00308 - STARGLIDE 6' VEER LEFT SLIDE
F00309 - STARGLIDE 6' VEER RIGHT SLIDE

WHICH ARE DESIGNED TO BE INSTALLED ON THE FOLLOWING PRODUCTS:

F00182 - 2 LEVEL TIMBER TOWER
F00185 - 1 LEVEL TIMBER TOWER
F00407 - 2 LEVEL TIMBER TOWER
F00408 - 3 LEVEL TIMBER TOWER

NOTE: COLOURS SHOWN ARE REPRESENTATIONAL AND MAY NOT BE THE SAME AS THOSE OF THE SUPPLIED PRODUCT

FOR CSA AND ASTM SPECIFICATIONS AND GENERAL NOTES SEE MAIN STRUCTURE INSTALLATION PACKAGE

DATE DOCUMENT RELEASED 2021-09-06
DOCUMENT NUMBER: 1051525-R4

PROPERTY OF EARTHSCAPE PLAY INC. - DO NOT COPY. DO NOT DISTRIBUTE.

PLEASE READ ALL INSTRUCTIONS

Before starting to install this equipment be sure to read through and understand these instructions.

If you have any questions, contact your local dealer for assistance before proceeding.

MEASUREMENTS AND STANDARDS

Measurements have been provided in both metres and [feet-inches]. Ensure to follow standards noted for the location in which this play equipment is being installed. Those marked CSA are to be used in Canada and those marked ASTM to be used in the United States.

LIST OF ABBREVIATIONS

AYC = Alaskan Yellow Cedar
WRC = Western Red Cedar
DPS = Designated Play Surface
SS = Stainless Steel
HDG = Hot Dipped Galvanized
WWM = Welded Wire Mesh
TYP = Typical
C/W = Complete With
UNO = Unless Noted Otherwise
EWF = Engineered Wood Fiber
PIP = Poured-In-Place Rubber Surfacing
PT = Pressure Treated

TOOLS SUPPLIED WITH THIS PRODUCT

- No tools supplied

TOOLS THE INSTALLER NEEDS TO SUPPLY

- High torque drill
  - recommend right angle or flexible drive
- Set of wood drill bits - up to 1/2"
- 1/2" impact driver
- Set of impact sockets - up to 1"
- 1/2" ratcheting socket wrench
- Set of imperial hex keys - up to 1/4"
- T25 drive bit
- T40 drive bit
- Transit or Laser Level
- Rigging and lifting straps

EQUIPMENT THE INSTALLER NEEDS TO SUPPLY

Machine to aid in lifting and positioning the slide.

- Site assembled Starglide plastic slide +/- 80 kg [180 lbs]

INSTALLER CREW AND TIME REQUIRED

Number of people needed: 2
Typical total person-hours to install: 5 + concrete cure time
Time breakdown:

- 1 hour x 2 people for excavation and pouring concrete
- 1 hour x 2 people for onsite fabrication and play equipment installation
- Time for concrete cure
- 1 hour x 1 person to remove bracing and install string probe kit

MATERIALS THE INSTALLER NEEDS TO SUPPLY

- Concrete

WARNINGS

These instructions do not provide specific guidance on the use of tools or the lifting and moving heavy objects. It is assumed that competent people are installing this product who are familiar with using the tools and equipment required and are knowledgeable and skilled at lifting and positioning heavy objects.

PROPERTY OF EARTHSCAPE PLAY INC. - DO NOT COPY. DO NOT DISTRIBUTE.

MAKE SURE YOU HAVE ALL THE PARTS

Examine the equipment and ensure you have all the required parts listed in the tables below.

PART IMAGE	ITEM NO.	PART NO.	DESCRIPTION	QTY.
SEE STANDARD DETAIL SD-035A AT PACK OF THIS PACKAGE	1	B00002	STRING PROBE KIT 135°	1
SEE IMAGE THIS SHEET	2	B00047	BRACKET SLIDE FOOTBUCK	1
SEE IMAGE THIS SHEET	3	B00056-70	SPI SLIDE SUPPORT POST - 70"	1
	4	H16674	ASSY SK A2 8mm X 80mm SS	3
ONE OF THE FOLLOWING SLIDES WILL BE SUPPLIED AS PER THE PRODUCT NUMBER ORDERED				
SEE IMAGE THIS SHEET	5A	SL0010	6' STARGLIDE SLIDE STRAIGHT (F00307)	1
SEE IMAGE THIS SHEET	5B	SL0018	6' STARGLIDE SLIDE VEER LEFT (F00308)	1
SEE IMAGE THIS SHEET	5C	SL0019	6' STARGLIDE SLIDE VEER RIGHT (F00309)	1

IMAGES OF FASTENERS IN THIS TABLE ARE REPRESENTATIONAL AND ARE PROVIDED TO HELP IDENTIFY PARTS.

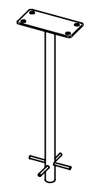

2 BRACKET SLIDE FOOTBUCK

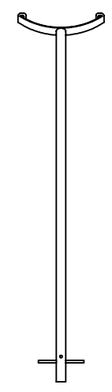

3 SPI SLIDE SUPPORT POST - 70"

5A

6' STARGLIDE SLIDE - STRAIGHT
(FOR PRODUCT F00307)
DOES NOT COME ASSEMBLED

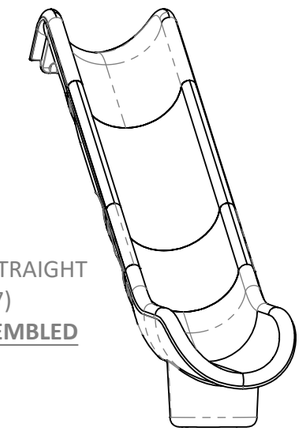

OR

5B

6' STARGLIDE SLIDE - VEER LEFT
(FOR PRODUCT F00308)
DOES NOT COME ASSEMBLED

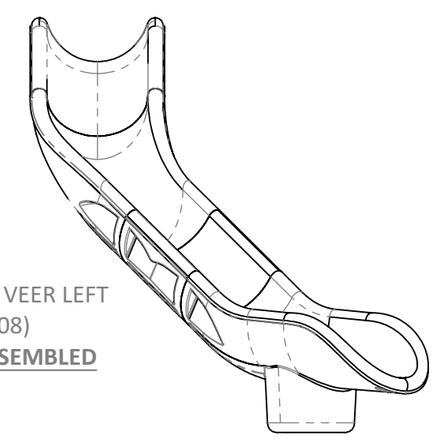

OR

5C

6' STARGLIDE SLIDE - VEER RIGHT
(FOR PRODUCT F00309)
DOES NOT COME ASSEMBLED

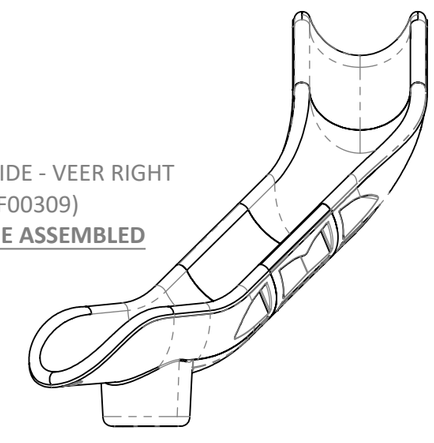

PROPERTY OF EARTHSCAPE PLAY INC. - DO NOT COPY. DO NOT DISTRIBUTE.

POSITION SLIDE

OPEN SLIDES - STARGLIDE

STEP 1 - CONFIRM WHERE THE ACCESSORY IS TO BE INSTALLED

Review the complete tower installation package and determine which side the slide is to be installed and what the finished product should look like. The images shown on this page are representational and may not match your exact installation. Your installation could be a mirror image of what is shown on this sheet and the shape of the slide could differ depending on the product number ordered.

STEP 2 - ASSEMBLE THE SLIDE AND SUPPORT POSTS

The plastic parts of the slide will arrive in pieces. Assemble using manufacturer's supplied hardware and instructions.
Secure the Middle Support Post to the slide (SPI Slide Support Post - 70") as per detail SD-007 at the back of this package
Secure the Slide Base Bracket (Bracket Slide Footbuck) to the slide as per detail SD-006 at the back of this package.

STEP 3 - POSITION SLIDE

With the slide fully assembled, position the top of the slide in the prefabricated notch in the tower. Centre in the opening as per Detail A this sheet.

Position the 2 support posts in the pre-augered holes (**as per complete tower installation package**).

Temporarily brace the slide to ensure the exit of the slide meets the target ***exit height*** above the finished play surface as per the Sample Side Elevation (this sheet) and detail SD-006 at the back of this package.

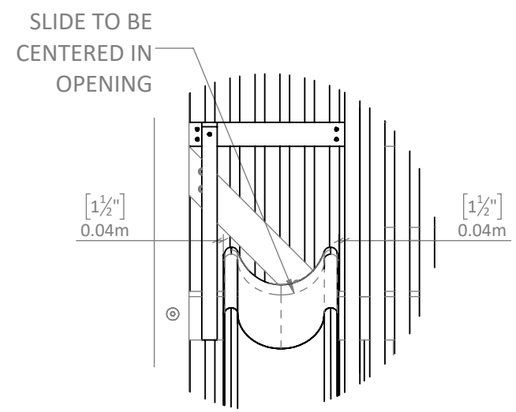

DETAIL A

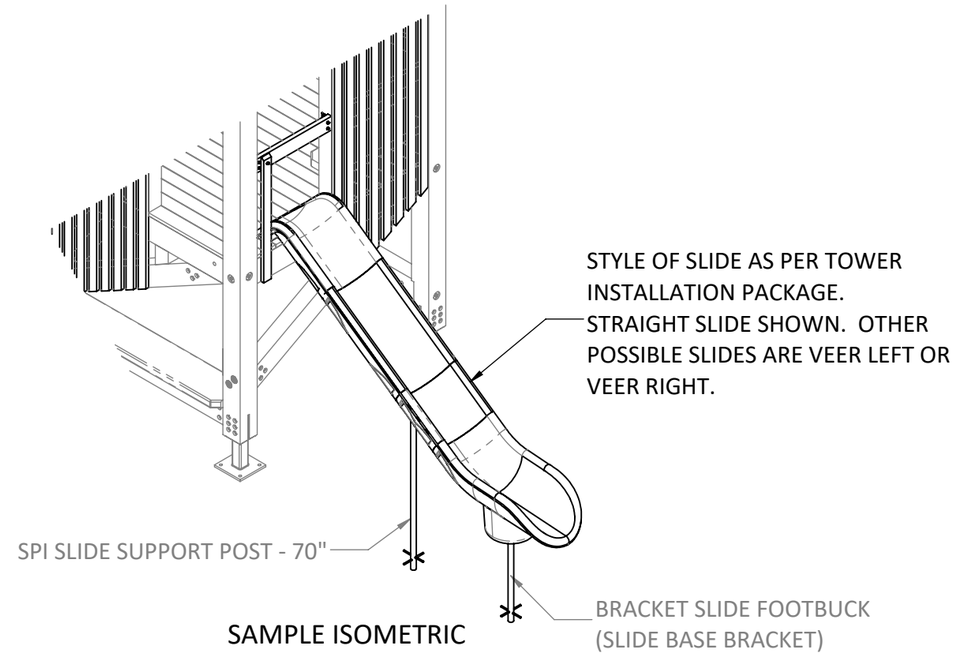

SAMPLE ISOMETRIC

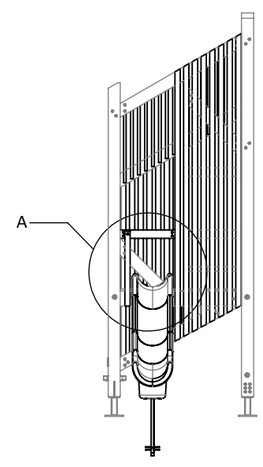

SAMPLE FRONT ELEVATION

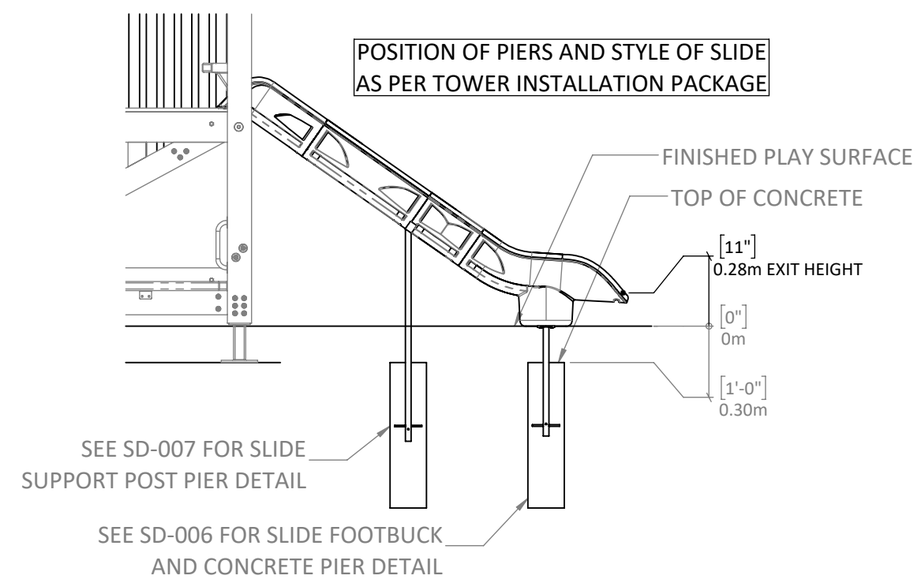

SAMPLE SIDE ELEVATION

PROPERTY OF EARTHSCAPE PLAY INC. - DO NOT COPY. DO NOT DISTRIBUTE.

STEP 4 - SECURE TOP OF SLIDE TO TOWER

Predrill and install the screws at the top of the slide as per Detail B this sheet

STEP 5 - POUR CONCRETE PIERS

Pour concrete piers as per details SD-006 and SD-007 at back of this package. Allow concrete to cure prior to proceeding to step 6.

STEP 6 - REMOVE BRACING

Once concrete piers have cured, remove temporary slide bracing.

STEP 7 - INSTALL STRING PROBE KIT

Install the string probe kit at the top of the slide as per detail SD-035A at the back of this package.

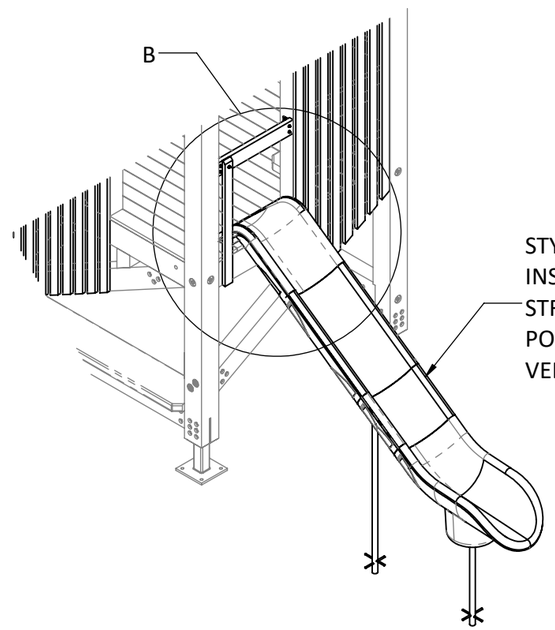

SAMPLE ISOMETRIC

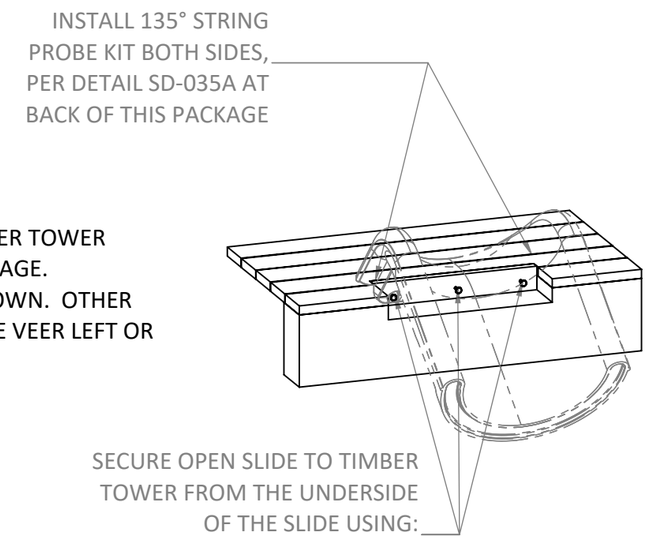

DETAIL B

PROPERTY OF EARTHSCAPE PLAY INC. - DO NOT COPY. DO NOT DISTRIBUTE.

SD-006

OPEN SLIDES - STARGLIDE

NOTES:

1. THIS CONNECTION DETAIL IS ONLY INTENDED TO SHOW AN ISOLATED SECTION. REFER TO THE APPROPRIATE DETAILS AS NOTED IN THE CONSTRUCTION DRAWINGS FOR ALL OTHER INFORMATION
2. IF SLIDE HEIGHT IS LESS THAN 1.2m [47.2"], EXIT HEIGHT MUST BE FROM 0-275mm [0-10.8"] ABOVE GRADE
3. IF SLIDE HEIGHT IS MORE THAN 1.2M [47.2"], EXIT HEIGHT MUST BE BETWEEN 175-380mm [6.9-15"] ABOVE GRADE
4. SLIDE EXIT HEIGHT TO BE SPECIFICALLY NOTED IN PROJECT INSTALLATION DRAWING

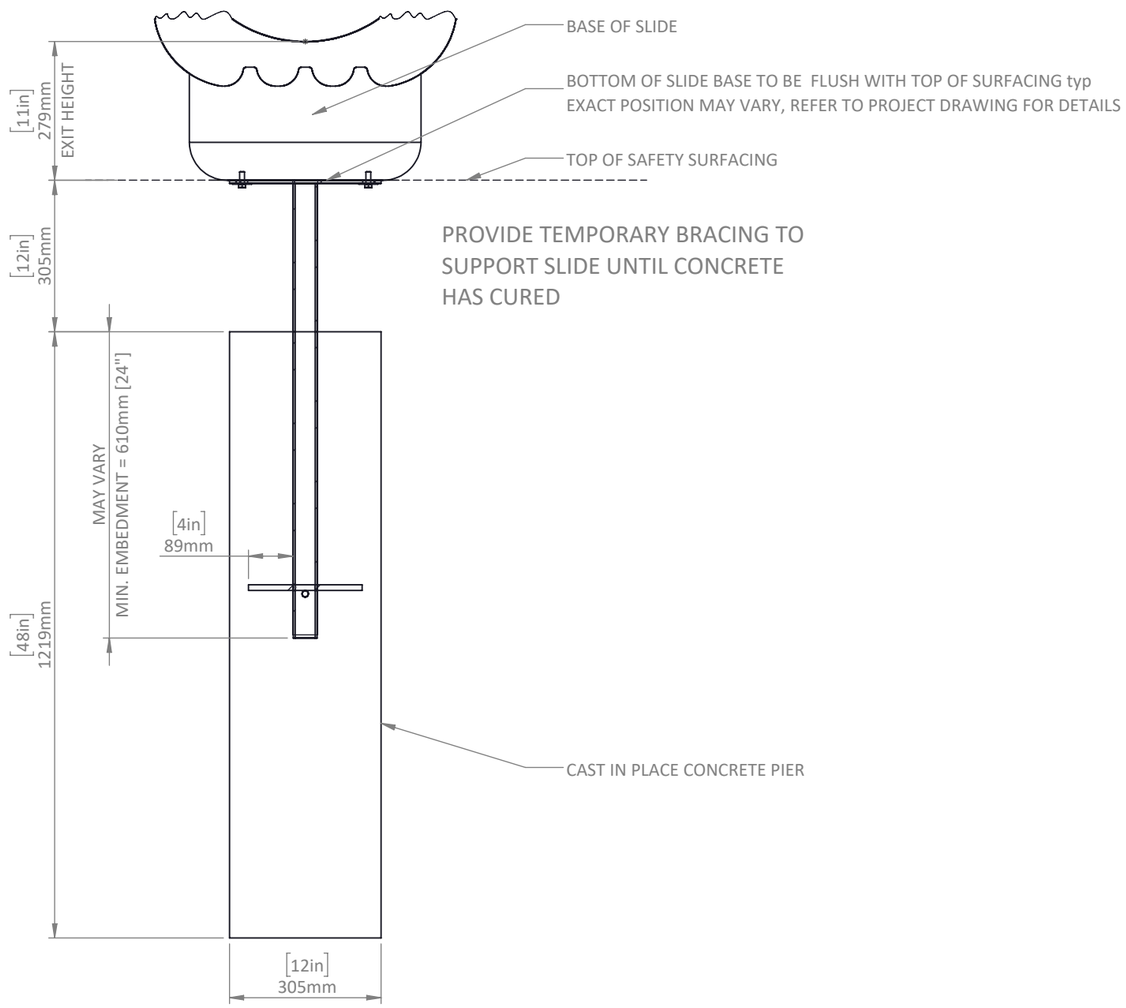

HARDWARE REFERENCE LIST

ITEM NO.	PartNo	DESCRIPTION	QTY.
1	B00047	Bracket Slide Footbuck	1
2	H30052	Washer 3/8" x 1-1/2" SS Fender	4
3	H10244	Hex Cap Screw 3/8-16 x 1 SS full thread	4

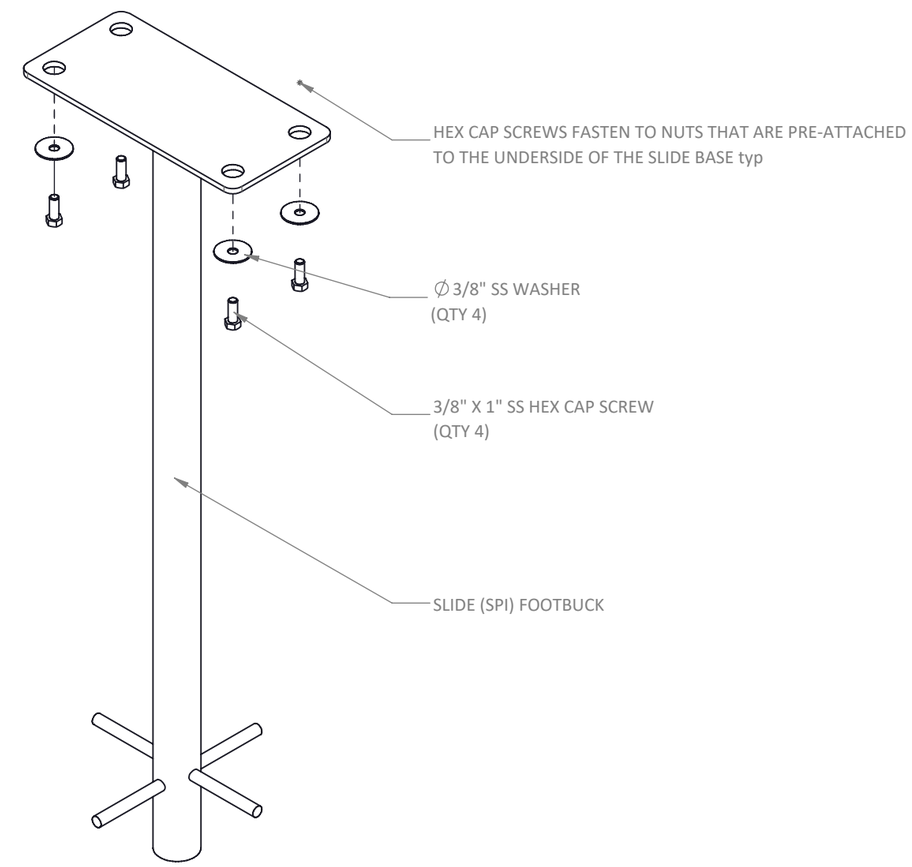

SLIDE (SPI) BASE BRACKET INSTALLATION

PROPERTY OF EARTHSCAPE PLAY INC. - DO NOT COPY. DO NOT DISTRIBUTE.

SD-007

OPEN SLIDES - STARGLIDE

IF REQUIRED, SLIDE POSTS TO BE CUT TO LENGTH ON SITE BY CONTRACTOR ONCE GRADE HAS BEEN ESTABLISHED
IF SLIDE HEIGHT IS LESS THAN 1.2m [47.2"], EXIT HEIGHT MUST BE FROM 0-275mm [0-10.8"] ABOVE GRADE
IF SLIDE HEIGHT IS MORE THAN 1.2M [47.2"], EXIT HEIGHT MUST BE BETWEEN 175-380mm [6.9-15"] ABOVE GRADE

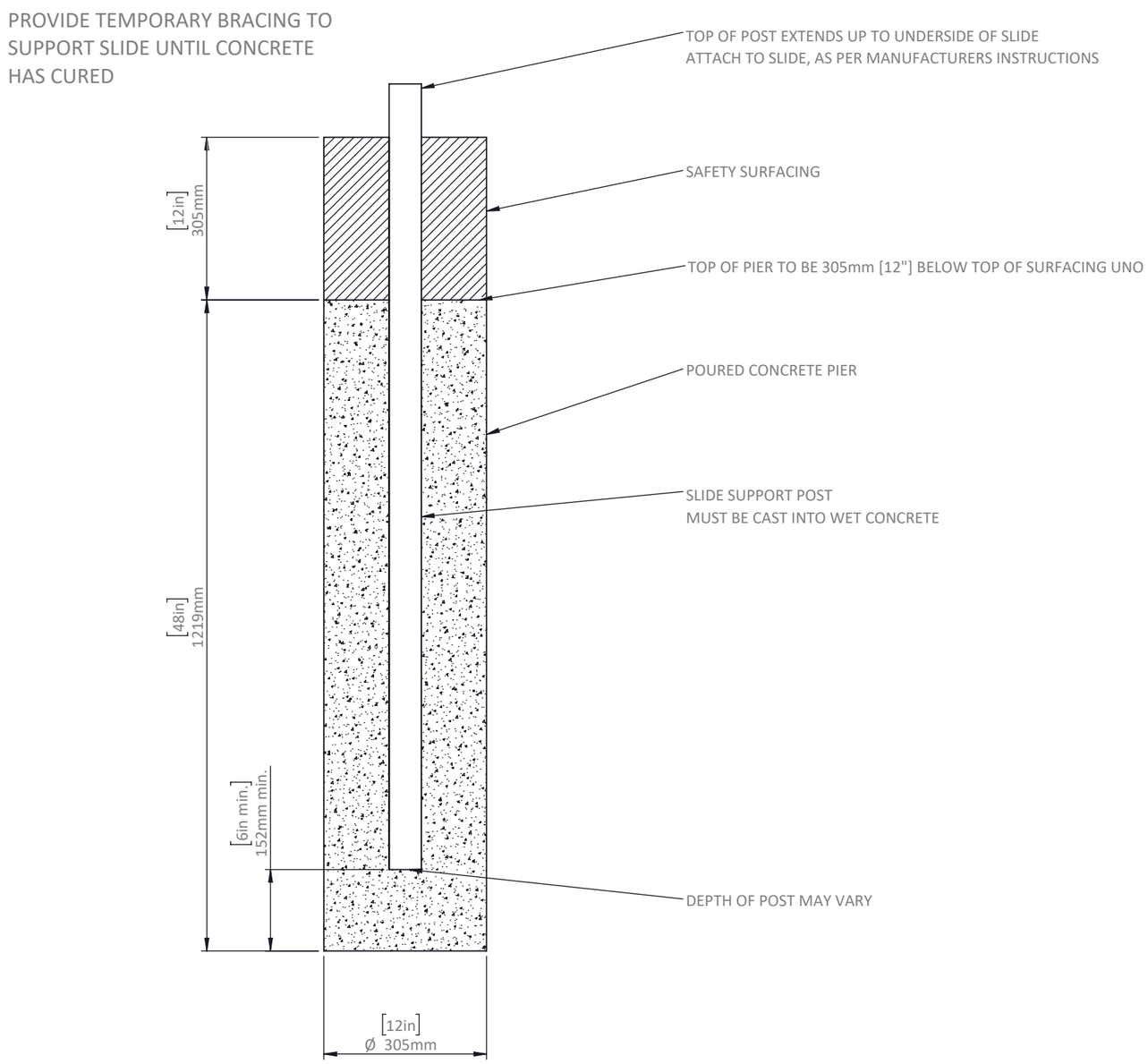

SLIDE SUPORT POST PIER INSTALLATION

PROPERTY OF EARTHSCAPE PLAY INC. - DO NOT COPY. DO NOT DISTRIBUTE.

SD-035A

OPEN SLIDES - STARGLIDE

NOTES:

1. REFER TO "GENERAL NOTES" SHEET FOR ALL GENERAL NOTES
2. THIS CONNECTION DETAIL IS ONLY INTENDED TO SHOW AN ISOLATED SECTION. REFER TO THE APPROPRIATE DETAILS AS NOTED IN THE INSTALLATION PACKAGE FOR ALL OTHER INFORMATION

B00002 KIT BOM			
ITEM NO.	PartNo	DESCRIPTION	QTY.
1	B00017	Bracket Slide String Probe 135°	2
2	H13225	Button Socket Head Cap Screw 3/8-16 x 1 SS	2
3	H16685	ASSY SK A2 8mm x 100mm SS	2
4	H30053	Washer 3/8" x 7/8" SS	2
5	H40071	Flat Rivet Nut 3/8"-16 SS	2
ITEMS BELOW ARE NOT SHOWN IN THIS DETAIL. THEY ARE USED FOR MOUNTING THE SLIDE BASE BRACKET. SEE SD-006 FOR MORE INFORMATION.			
6	H10244	Hex Cap Screw 3/8-16 x 1 SS full thread	4
7	H30052	Washer 3/8" x 1-1/2" SS Fender	4

*ONLY USE ONE KIT PER SLIDE

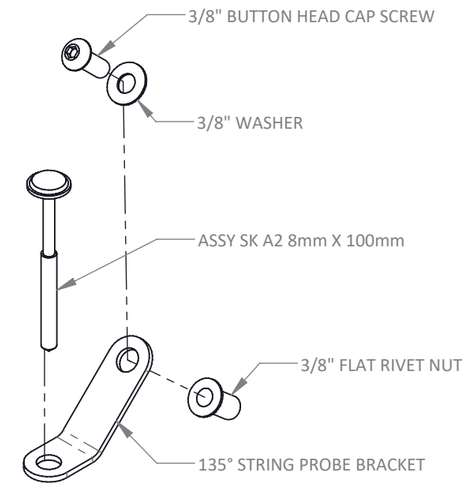

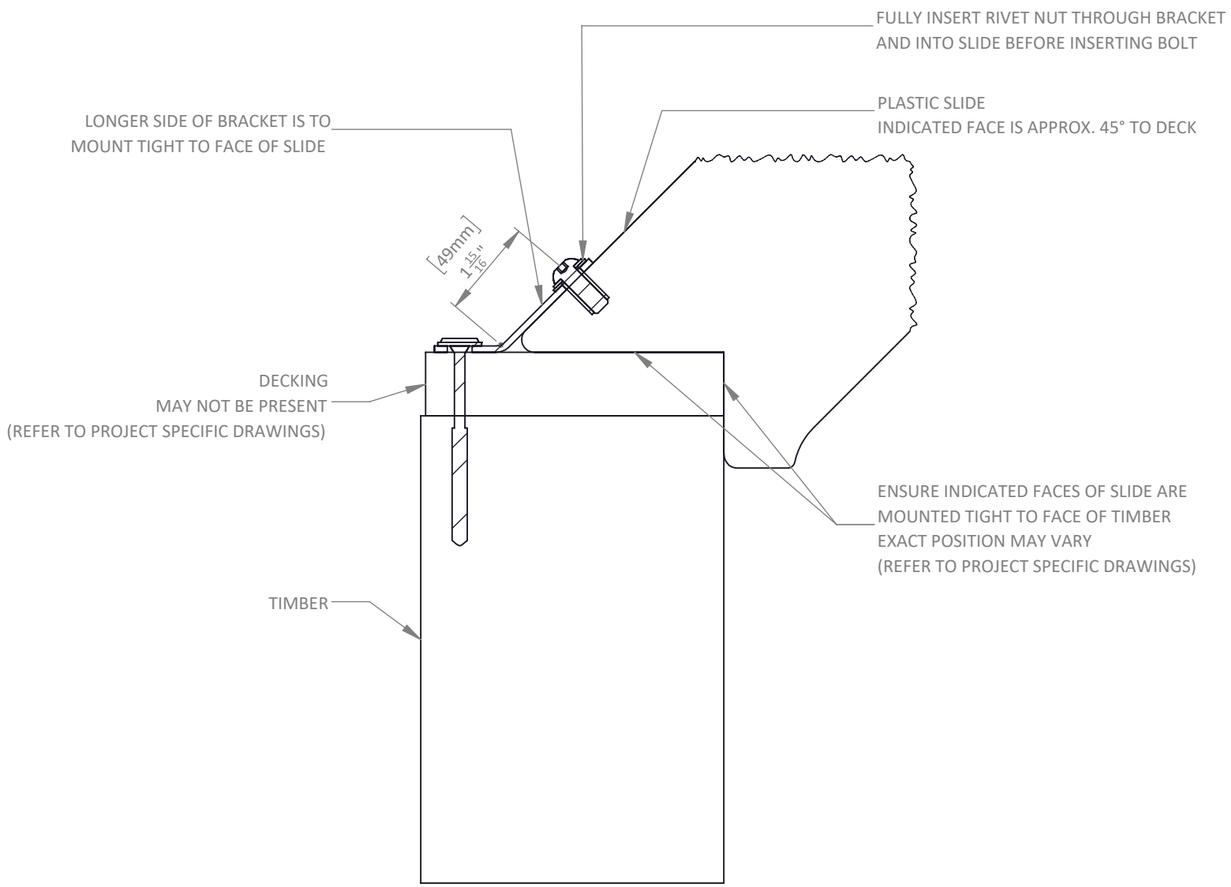

DETAIL A

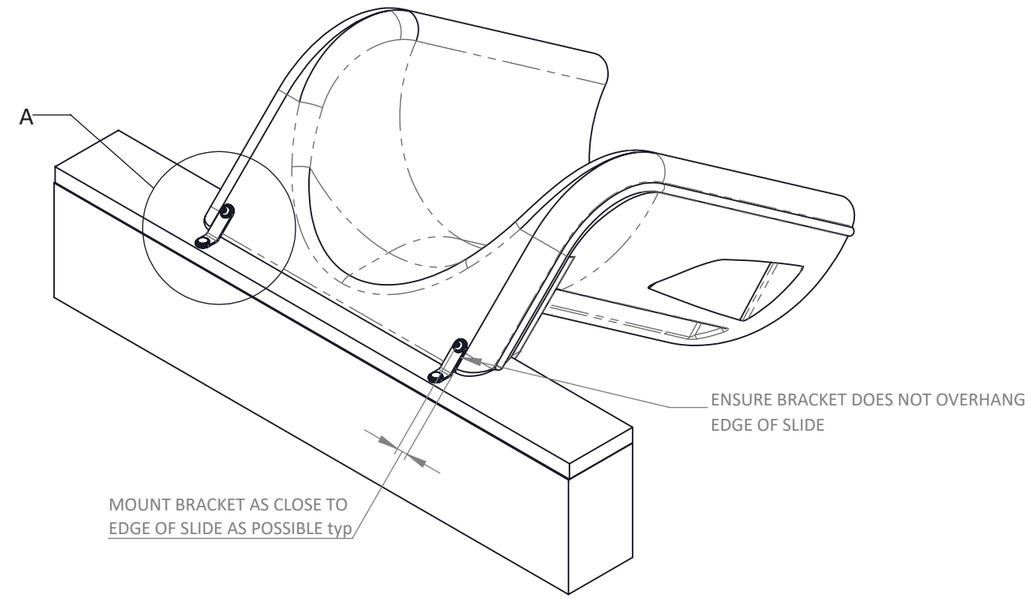

135° STRING PROBE BRACKET INSTALLATION

DATE DOCUMENT RELEASED 2021-09-06
DOCUMENT NUMBER: 1051525 - R4

PROPERTY OF EARTHSCAPE PLAY INC. - DO NOT COPY. DO NOT DISTRIBUTE.

INSTALLATION INSTRUCTIONS

EARTHSCAPE COLLECTIONS

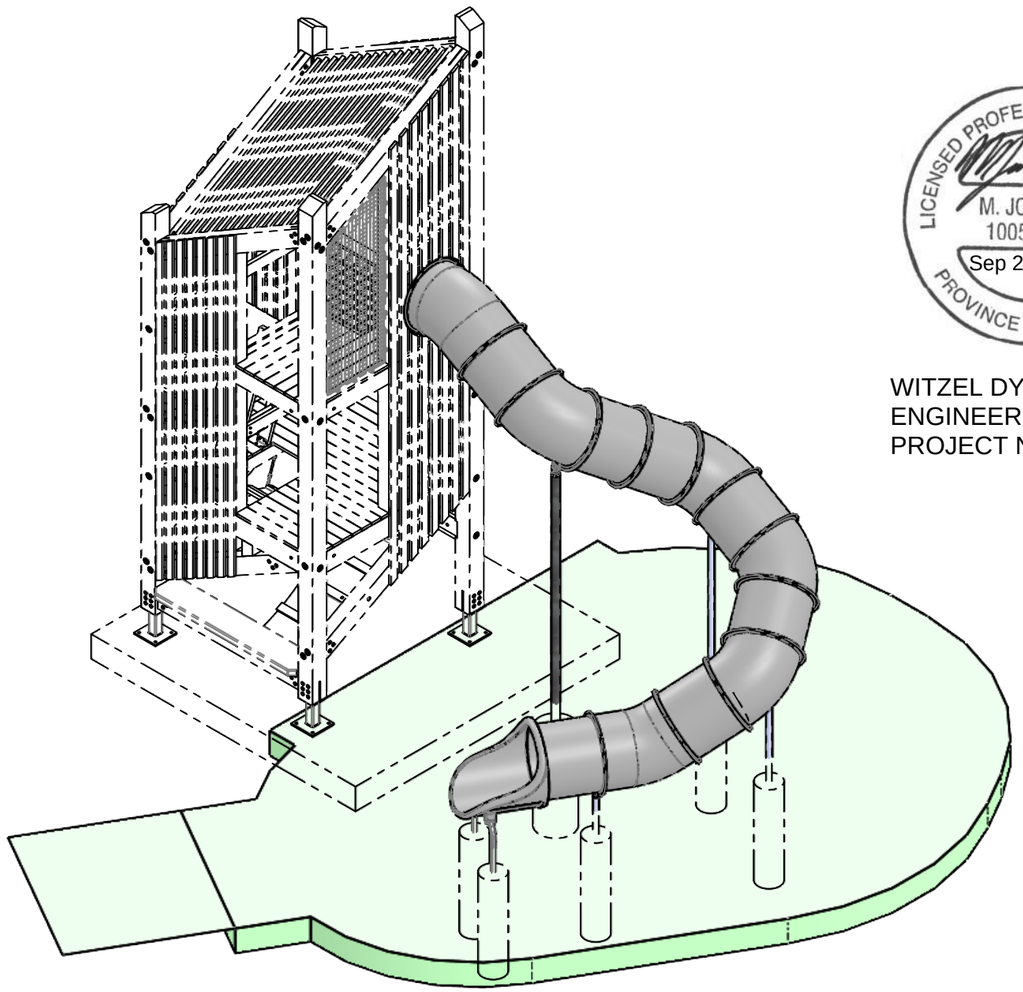

LICENSED PROFESSIONAL ENGINEER
M. JOHNSON
100514620
Sep 22, 2025
PROVINCE OF ONTARIO

WITZEL DYCE
ENGINEERING INC.
PROJECT NO.: 12936-165

PLASTIC TUBE SLIDE - FLANGE - 12' - TURN RIGHT

THESE INSTRUCTIONS APPLY TO THE FOLLOWING VERSIONS OF THIS PRODUCT:

F00316 - PLASTIC TUBE SLIDE - FLANGE - 12' - TURN RIGHT

WHICH IS DESIGNED TO BE INSTALLED ON THE FOLLOWING PRODUCTS:

F00407 - 2 LEVEL TIMBER TOWER
F00408 - 3 LEVEL TIMBER TOWER

NOTE: COLOURS SHOWN ARE REPRESENTATIONAL AND MAY NOT BE THE SAME AS THOSE OF THE SUPPLIED PRODUCT

FOR CSA AND ASTM SPECIFICATIONS AND GENERAL NOTES, SEE MAIN STRUCTURE INSTALLATION PACKAGE.

DATE DOCUMENT RELEASED 2022-11-09
DOCUMENT NUMBER: 1074101-R2

PROPERTY OF EARTHSCAPE PLAY INC. - DO NOT COPY. DO NOT DISTRIBUTE.

PLEASE READ ALL INSTRUCTIONS

Before starting to install this equipment be sure to read through and understand these instructions.

If you have any questions, contact your local dealer for assistance before proceeding.

MEASUREMENTS AND STANDARDS

Measurements have been provided in both metres and [feet-inches]. Ensure to follow standards noted for the location in which this play equipment is being installed. Those marked CSA are to be used in Canada and those marked ASTM to be used in the United States.

LIST OF ABBREVIATIONS

AYC = Alaskan Yellow Cedar
WRC = Western Red Cedar
DPS = Designated Play Surface
SS = Stainless Steel
HDG = Hot Dipped Galvanized
WWM = Welded Wire Mesh
TYP = Typical
C/W = Complete With
UNO = Unless Noted Otherwise
EWF = Engineered Wood Fiber
PIP = Poured-In-Place Rubber Surfacing
PT = Pressure Treated

TOOLS SUPPLIED WITH THIS PRODUCT

- T00047 - Tri Groove Drive (Fits 5/16", 3/8", 8mm AND 10mm)

TOOLS THE INSTALLER NEEDS TO SUPPLY

- High torque drill
- 1/2" impact driver
- Set of impact sockets - up to 1"
- 1/2" ratcheting socket wrench
- Set of hex keys
- Set of wood drill bits - up to 1/2"
- T25 drive bit
- T40 drive bit
- Angle grinder (with course 24 grit sanding disks and metal cut off disks)
- Transit or Laser Level
- Rigging and lifting straps

EQUIPMENT THE INSTALLER NEEDS TO SUPPLY

Machine to lift and position heaviest element.

- Site assembled slide +/- 250 kg [560 lbs]

Machine or scaffolding to allow installers to work safely at heights.

INSTALLER CREW AND TIME REQUIRED

Number of people needed: 2
Typical total person-hours to install: 24 + concrete cure time

Time breakdown:

- 2 hours x 2 people for excavation
- 7 hours x 2 people for onsite fabrication and play equipment installation
- 2 hours x 2 people for pouring concrete
- Time for concrete cure
- 1 hours x 2 people for temporary brace removal

MATERIALS THE INSTALLER NEEDS TO SUPPLY

- Threadmate threadlocker Vibra-Tite VC-3 (or equal)
- Concrete

WARNINGS

These instructions do not provide specific guidance on the use of tools or the lifting and moving heavy objects. It is assumed that competent people are installing this product who are familiar with using the tools and equipment required and are knowledgeable and skilled at lifting and positioning heavy objects.

PROPERTY OF EARTHSCAPE PLAY INC. - DO NOT COPY. DO NOT DISTRIBUTE.

SUPPLIED PARTS

PLASTIC TUBE SLIDE - FLANGE - 12' - TURN RIGHT

MAKE SURE YOU HAVE ALL THE PARTS

Examine the equipment and ensure you have all the required parts listed in the table below.

PART IMAGE	ITEM NO.	PART NO.	DESCRIPTION	QTY.
	1	H13224	BUTTON SOCKET HEAD CAP SCREW 3/8-16 X 7/8 SS	13
	2	H30053	WASHER 3/8" X 7/8" SS	13
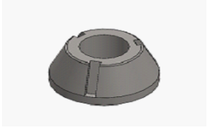	3	H40032	TRI-GROOVE NUT 3/8"-16	13
NO IMAGE PROVIDED	4	T00047	TRI GROOVE DRIVE (FITS 5/16", 3/8", 8mm AND 10mm)	1
SEE IMAGE THIS SHEET	5	SL0030	PLASTIC TUBE SLIDE - FLANGE - 12' - TURN RIGHT	1

IMAGES OF FASTENERS IN THIS TABLE ARE REPRESENTATIONAL TO HELP IDENTIFY PARTS.

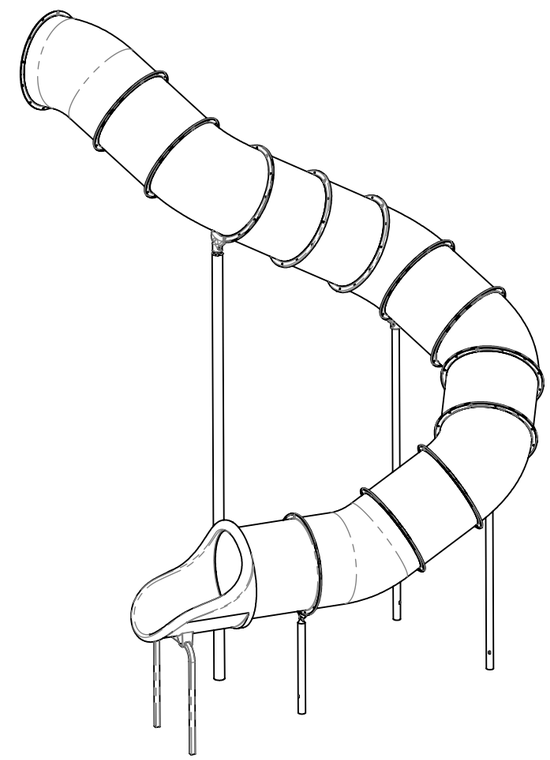

SL0030 - PLASTIC TUBE SLIDE - FLANGE - 12' - TURN RIGHT

(DOES NOT SHIP PRE-ASSEMBLED)

PROPERTY OF EARTHSCAPE PLAY INC. - DO NOT COPY. DO NOT DISTRIBUTE.

FINISHED PRODUCT

PLASTIC TUBE SLIDE - FLANGE - 12' - TURN RIGHT

WHAT THE FINISHED PRODUCT LOOKS LIKE

Finished play surface and concrete foundations by Installer.

The foundation design shown here might be different than what is shown in the main tower installation package. If any differences are noted, the main installation package shall take precedent over the details shown here.

The foundation detail provided in these instructions has been developed assuming typical soil conditions specified in general notes. If the subgrade encountered does not meet these conditions, the subgrade must be improved or revisions made to this detail. Revisions to the detail are the responsibility of the Installer and it is strongly recommended any changes be reviewed and approved by a registered engineer.

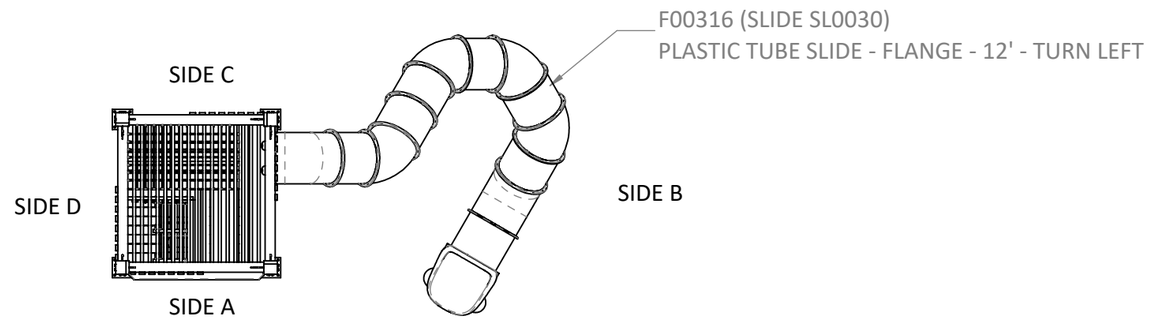

PLAN VIEW

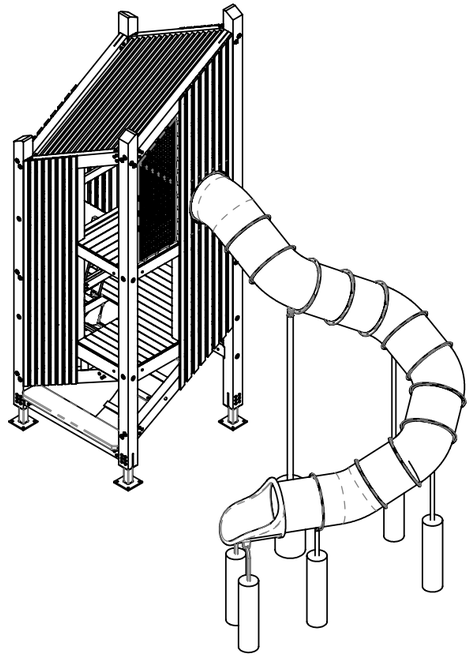

ISOMETRIC VIEW

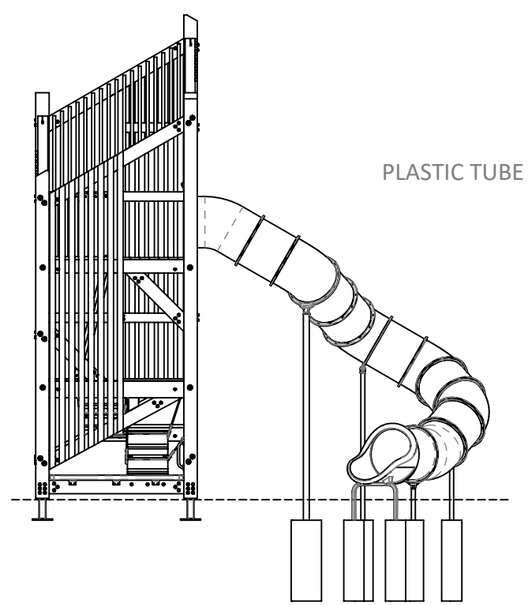

SIDE A ELEVATION

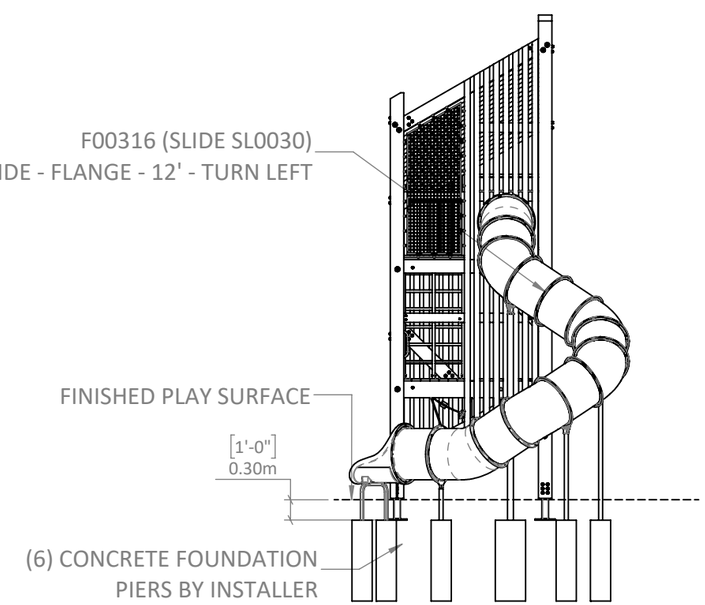

SIDE B ELEVATION

PROPERTY OF EARTHSCAPE PLAY INC. - DO NOT COPY. DO NOT DISTRIBUTE.

LOCATE PLAY EQUIPMENT

PLASTIC TUBE SLIDE - FLANGE - 12' - TURN RIGHT

STEP 1 - LOCATING THE EQUIPMENT ON SITE

Review the complete tower installation package to determine what the finished product should look like. The images shown in this package are representational and may not match your exact installation.

Ensure you know what the designed elevation is for the finished safety surface. All heights provided in these instructions will be relative to the finished play surface. The finished surface elevation is not within the scope of these instructions and should be provided by others.

THESE INSTRUCTIONS ARE BASED ON A STANDARD WHICH ASSUMES A LEVEL PLAYING SURFACE THAT IS 305mm (12") DEEP.

STEP 2 - LAYOUT SLIDE PIERS

Layout the centre of all slide piers using the pier layout plan and the pier location table this sheet. Use the corners of the tower post base brackets noted as reference points in the complete tower installation package.

STEP 3 - AUGER HOLES

Auger all slide pier holes as per Typical Augered Pier detail this sheet as per the diameter noted in Pier Layout Table this sheet. Note depth of augured hole provided from the standard **finished play surface grade**. Finished grades are not within the scope of these instructions and should be provided by others.

SLIDE SUPPORT POSTS TO BE CAST IN PLACE DURING INSTALLATION.

DO NOT POUR CONCRETE YET.

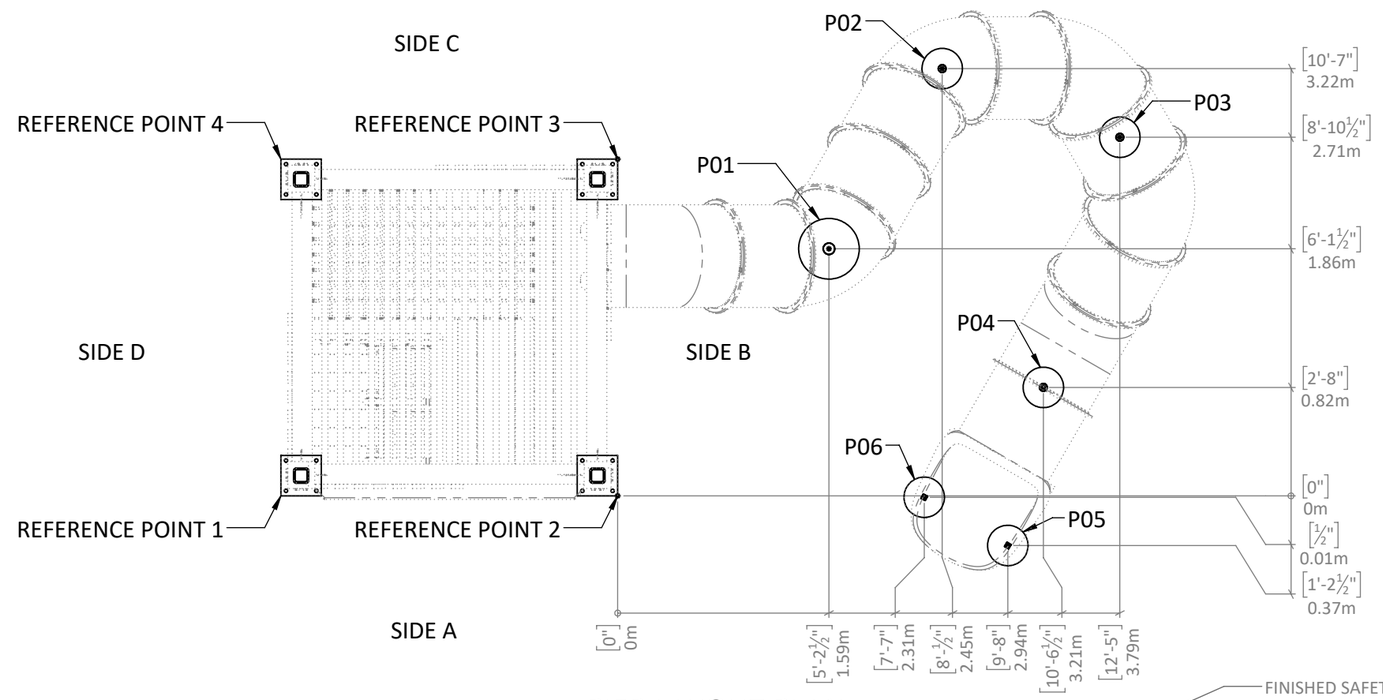

PIER LAYOUT PLAN

PIER LAYOUT TABLE			
PIER I.D.	RAY FROM REF. POINT 2	RAY FROM REF. POINT 3	PIER DIAMETER
P01	[8'-½"] 2.45m	[5'-8"] 1.73m	[1'-6"] ∅0.46m
P02	[13'-3½"] 4.05m	[8'-4"] 2.54m	[1'-0"] ∅0.30m
P03	[15'-3"] 4.65m	[12'-5½"] 3.79m	[1'-0"] ∅0.30m
P04	[10'-10½"] 3.31m	[11'-11½"] 3.64m	[1'-0"] ∅0.30m
P05	[9'-9"] 2.97m	[13'-7"] 4.14m	[1'-0"] ∅0.30m
P06	[7'-7"] 2.31m	[11'-3½"] 3.44m	[1'-0"] ∅0.30m

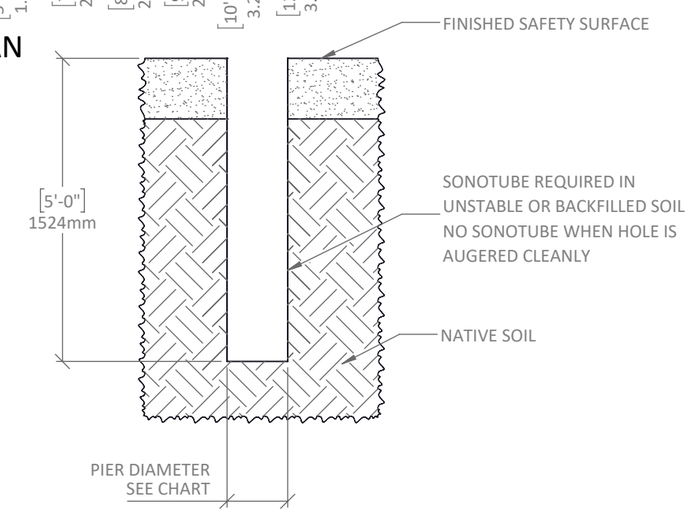

TYPICAL AUGERED PIER

PROPERTY OF EARTHSCAPE PLAY INC. - DO NOT COPY. DO NOT DISTRIBUTE.

SLIDE ENTRANCE

PLASTIC TUBE SLIDE - FLANGE - 12' - TURN RIGHT

STEP 4 - PREP TOWER FOR TUBE SLIDE INSTALL

Temporarily remove tread from wooden step from inside of tower at entrance to slide as shown in Inside View. Save screws

STEP 5 - INSTALL TUBE SLIDE ENTRANCE SECTION

Position the slide entrance section as shown in Slide Entrance Section View and Slide Entrance Elevation View this sheet.

Secure the tube slide entrance section to the steel panel already mounted on the timber tower as per Detail B.

Reinstall tread for wooden step inside the tower.

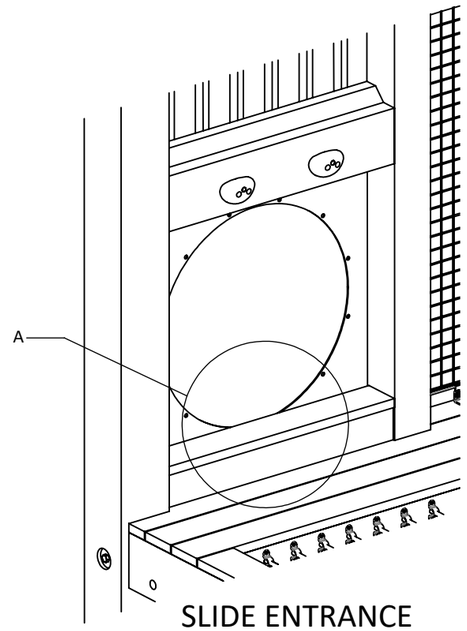

SLIDE ENTRANCE
INSIDE VIEW

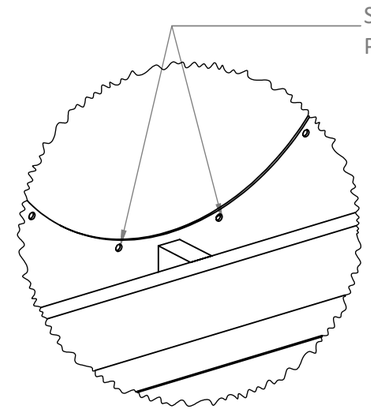

DETAIL A

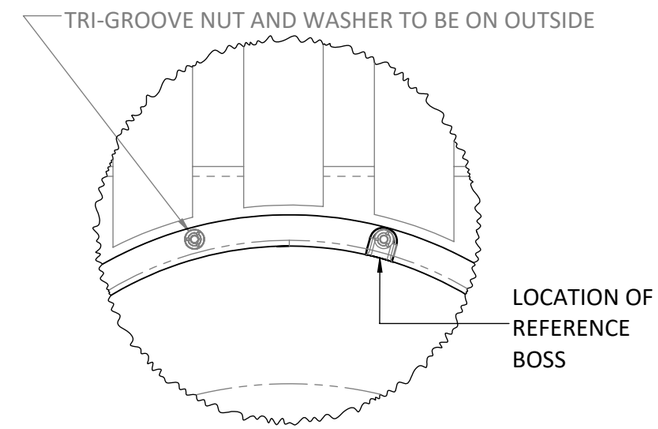

DETAIL B

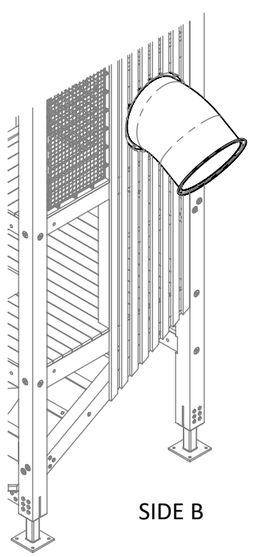

ISOMETRIC VIEW

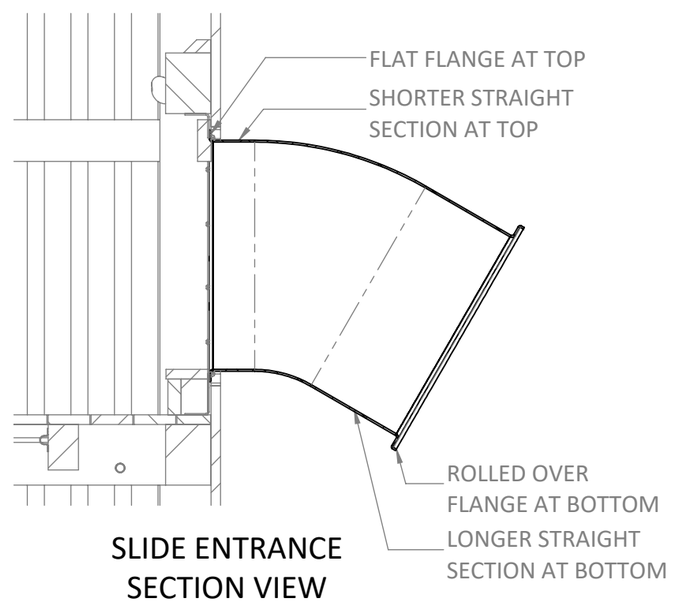

SLIDE ENTRANCE
SECTION VIEW

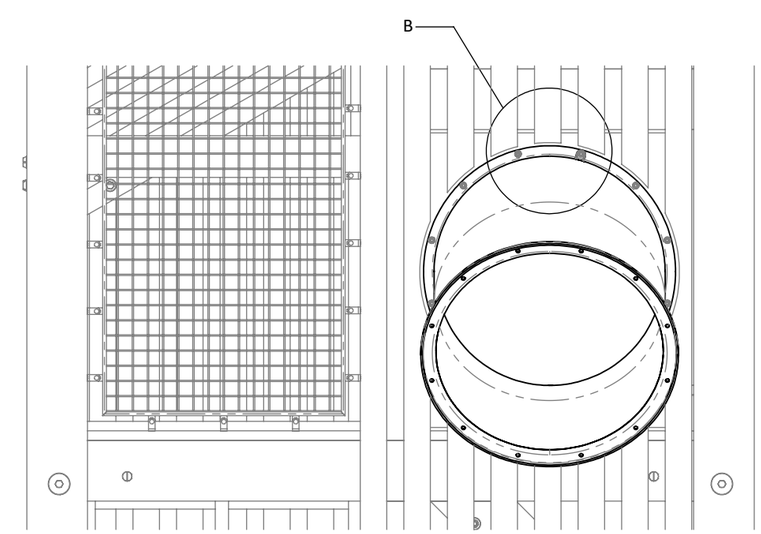

SLIDE ENTRANCE
ELEVATION VIEW

PROPERTY OF EARTHSCAPE PLAY INC. - DO NOT COPY. DO NOT DISTRIBUTE.

ASSEMBLE SLIDE

PLASTIC TUBE SLIDE - FLANGE - 12' - TURN RIGHT

STEP 6 - ASSEMBLE REMAINDER OF TUBE SLIDE

Complete the assembly and installation of the slide in the order noted on the Slide Master Layout this sheet working from the entrance of the slide to the exit.

Tube sections should be rotated so the reference bosses aligns from one section to the next except for slide exit pieces. See slide exit detail next sheet.

Refer to chart on this sheet that matches Earthscape part numbers to the slide manufacturer part numbers and the manufacturer's assembly/installation package numbers. Refer to slide manufacturer's assembly/installation package for more information.

Provide temporary support for the slide as it's being assembled. Once entire slide assembled, support post will be added. See next sheet.

Do not pour concrete piers at this time.

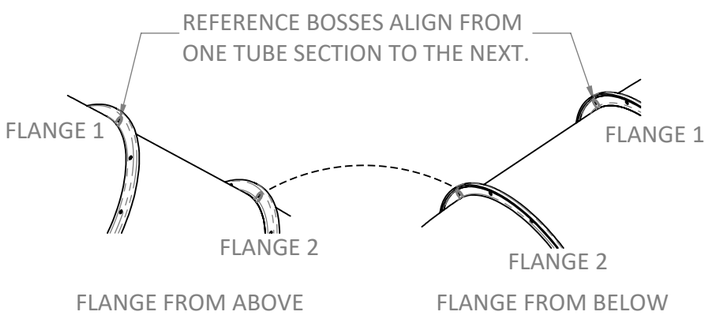

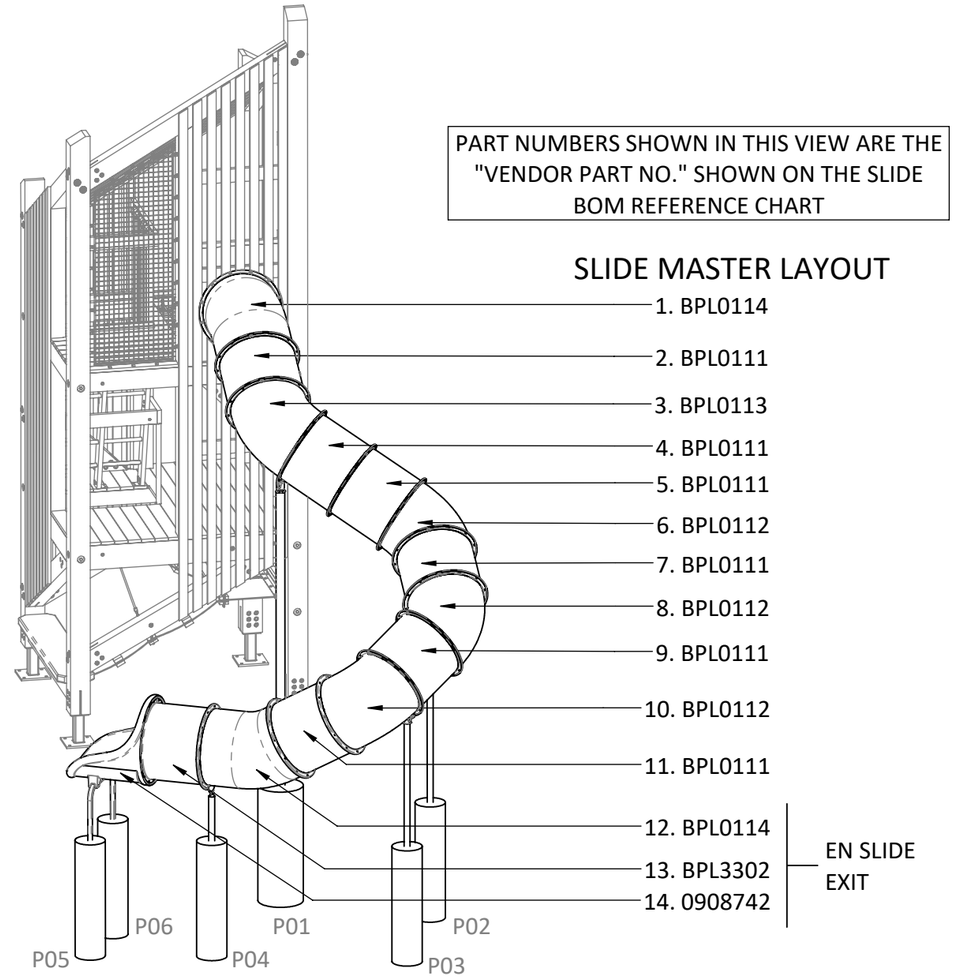

SLIDE BOM REFERENCE CHART				
EARTHSCAPE PART NO.	VENDOR PART NO.	VENDOR ASM NO.	DESCRIPTION	QTY.
SL3001	(2X) BPL0114 + (1X) BPL3302 + (1X) 0908742	ZZYYA846	CUSTOM SLIDE ENTRANCE WITH EN SLIDE EXIT - IN GROUND	1
SL3002	BPL0111	ZZUN3007	30" ROUND STRAIGHT TUBE SECTION	6
SL3004	BPL0113	ZZUN3008	30" ROUND LEFT TUBE SECTION	1
SL3005	BPL0112	ZZUN3009	30" ROUND RIGHT TUBE SECTION	3
SL3000		ZZUN3011	DO NOT CLIMB - SLIDE PANEL	1
SL3007		ZZUN3036	3FT ROUND TUBE SLIDE SUPPORT LEG - IN GROUND	1
SL3010		ZZUN3027	6FT ROUND TUBE SLIDE SUPPORT LEG - IN GROUND	1
SL3013		ZZUN3024	9FT TUBE SLIDE SUPPORT LEG - IN GROUND	1

REFER TO SLIDE MANUFACTURER'S INSTALLATION INSTRUCTIONS WHICH REFERNCE THE VENDOR ASM NO.

PROPERTY OF EARTHSCAPE PLAY INC. - DO NOT COPY. DO NOT DISTRIBUTE.

INSTALL SUPPORT POSTS

PLASTIC TUBE SLIDE - FLANGE - 12' - TURN RIGHT

STEP 6 - INSTALL SUPPORT POSTS

Secure the slide support posts to the slide with the bottom of the posts hanging in the augered holes. Support post installation as per slide manufacturer's details.

Refer to chart on the previous sheet that matches Earthscape part numbers to the slide manufacturer's assembly/installation package numbers.

Finished grade labels on support posts may be wrong. Correct heights noted on this sheet.

Do not pour concrete at this time.

STEP 7 - CHECK POSTS AND ADJUST HEIGHTS

Once all supports posts are hanging from the slide, confirm slide position by checking that all support posts are centered in the augered pier holes. Adjust slide position as needed.

With all support posts attached to the slide, adjust the temporary bracing so the support post heights match the dimensions provided on this sheet.

Slide exit height should be approximately 0.28m - 0.30m [11"-12"] above the finished play surface.

Ensure slide exit is sloped to drain water.

Pour concrete piers.

STEP 8 - REMOVE TEMPORARY SUPPORTS

Once concrete has cured remove the temporary supports.

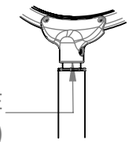

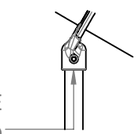

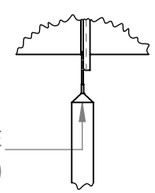

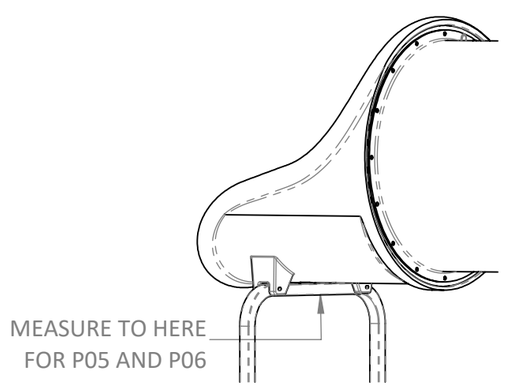

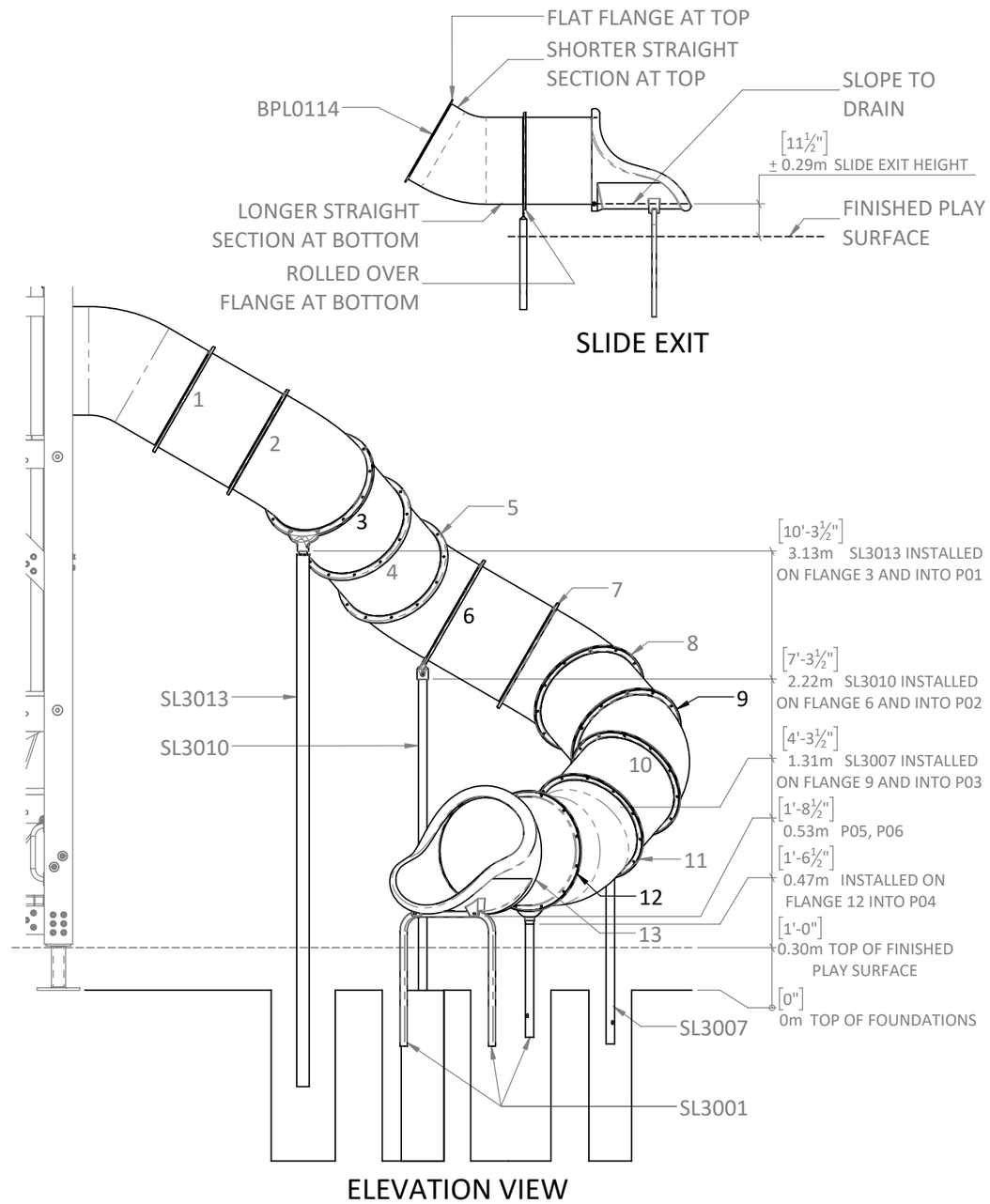

PROPERTY OF EARTHSCAPE PLAY INC. - DO NOT COPY. DO NOT DISTRIBUTE.

INSTALLATION INSTRUCTIONS

EARTHSCAPE COLLECTIONS

WITZEL DYCE
ENGINEERING INC.
PROJECT NO.: 12936-165

LICENSED PROFESSIONAL ENGINEER
M. JOHNSON
100514620
Sep 22, 2025
PROVINCE OF ONTARIO

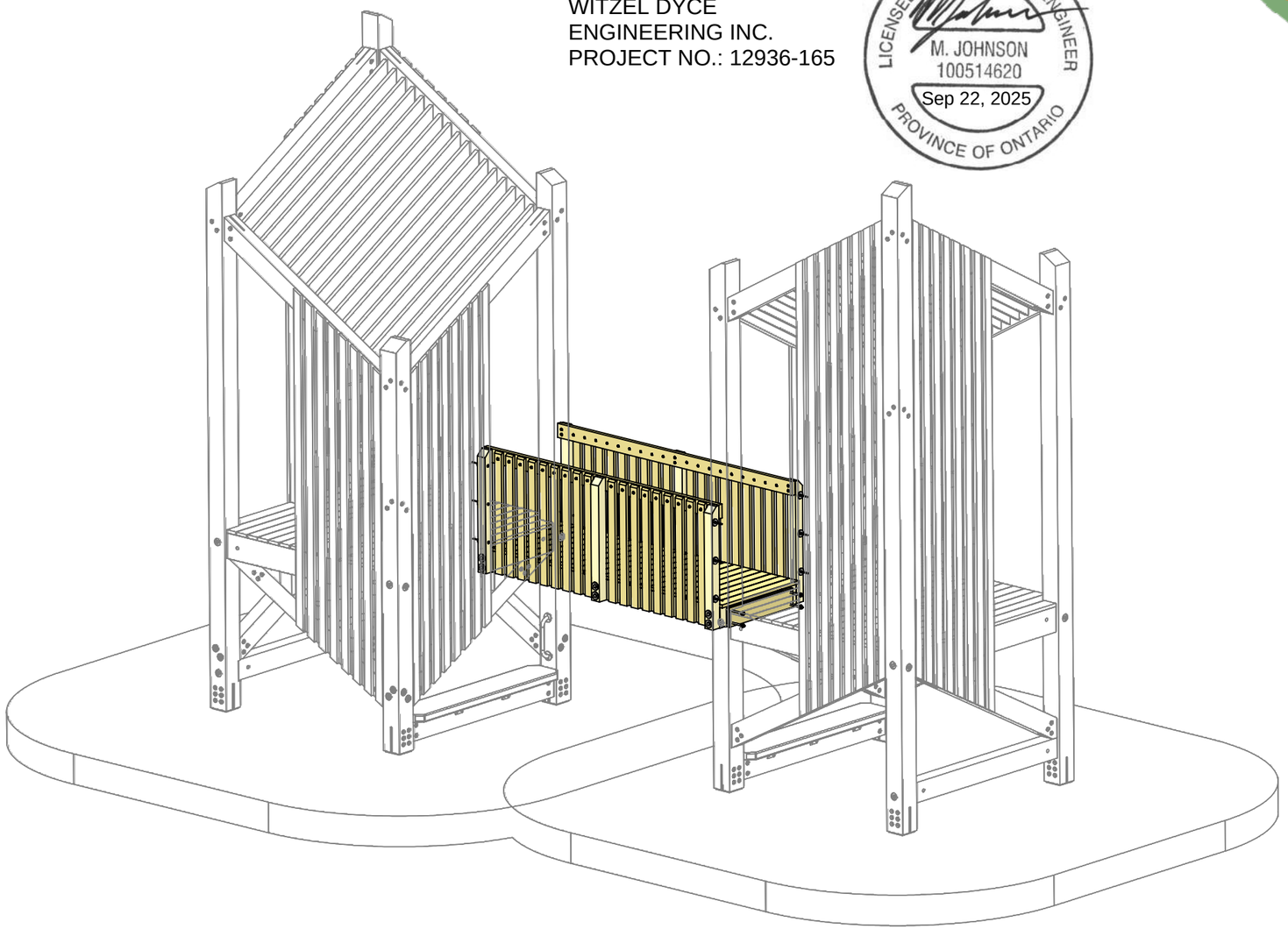

10' WOODEN BRIDGE

THESE INSTRUCTIONS APPLY TO THE FOLLOWING VERSIONS OF THIS PRODUCT:

F00363 - 10' WOODEN BRIDGE

WHICH IS DESIGNED TO BE INSTALLED ON THE FOLLOWING PRODUCTS:

F00182 - 2 LEVEL TIMBER TOWER
F00185 - 1 LEVEL TIMBER TOWER
F00407 - 2 LEVEL TIMBER TOWER
F00408 - 3 LEVEL TIMBER TOWER

NOTE: COLOURS SHOWN ARE REPRESENTATIONAL AND MAY NOT BE THE SAME AS THOSE OF THE SUPPLIED PRODUCT

FOR CSA AND ASTM SPECIFICATIONS AND GENERAL NOTES SEE MAIN STRUCTURE INSTALLATION PACKAGE

DATE DOCUMENT RELEASED 2022-05-30
DOCUMENT NUMBER: 1073001-R1

PROPERTY OF EARTHSCAPE PLAY INC. - DO NOT COPY. DO NOT DISTRIBUTE.

PLEASE READ ALL INSTRUCTIONS

Before starting to install this equipment be sure to read through and understand these instructions.

If you have any questions, contact your local dealer for assistance before proceeding.

MEASUREMENTS AND STANDARDS

Measurements have been provided in both metres and [feet-inches]. Ensure to follow standards noted for the location in which this play equipment is being installed. Those marked CSA are to be used in Canada and those marked ASTM to be used in the United States.

LIST OF ABBREVIATIONS

AYC = Alaskan Yellow Cedar
WRC = Western Red Cedar
DPS = Designated Play Surface
SS = Stainless Steel
HDG = Hot Dipped Galvanized
WWM = Welded Wire Mesh
TYP = Typical
C/W = Complete With
UNO = Unless Noted Otherwise
EWF = Engineered Wood Fiber
PIP = Poured-In-Place Rubber Surfacing
PT = Pressure Treated

TOOLS SUPPLIED WITH THIS PRODUCT

- No tools supplied

TOOLS THE INSTALLER NEEDS TO SUPPLY

- High torque drill
- Set of wood drill bits up to 1/2"
- T25 drive bit
- T40 drive bit
- Circular saw
- Transit or laser Level
- Rigging and lifting straps

EQUIPMENT THE INSTALLER NEEDS TO SUPPLY

- Machine to lift and position 300 kg [670 lb] pre-assembled wooden bridge.

INSTALLER CREW AND TIME REQUIRED

Number of people needed: 3
Typical total person-hours to install: 3

Time breakdown:
- 1 hours x 3 people to position and anchor the bridge in place

MATERIALS THE INSTALLER NEEDS TO SUPPLY

- No additional materails required

WARNINGS

These instructions do not provide specific guidance on the use of tools or the lifting and moving heavy objects. It is assumed that competent people are installing this product who are familiar with using the tools and equipment required and are knowledgeable and skilled at lifting and positioning heavy objects.

PROPERTY OF EARTHSCAPE PLAY INC. - DO NOT COPY. DO NOT DISTRIBUTE.

MAKE SURE YOU HAVE ALL THE PARTS

Examine the equipment and ensure you have all the required parts listed in the table below.

PART IMAGE	ITEM NO.	PART NO.	DESCRIPTION	QTY.
	1	H16687	ASSY SK A2 8mm X 200mm SS	12
	2	H16685	ASSY SK A2 8mm X 100mm SS	8
SEE IMAGE THIS SHEET	3	F00363	PRE-ASSEMBLED WOODEN BRIDGE 10'	1

IMAGES OF FASTENERS IN THIS TABLE ARE REPRESENTATIONAL TO HELP IDENTIFY PARTS.

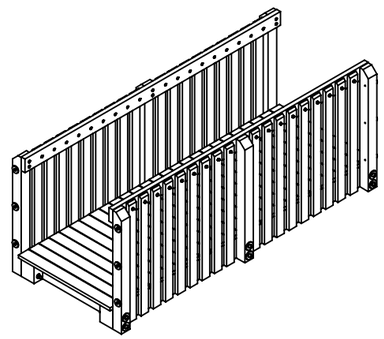

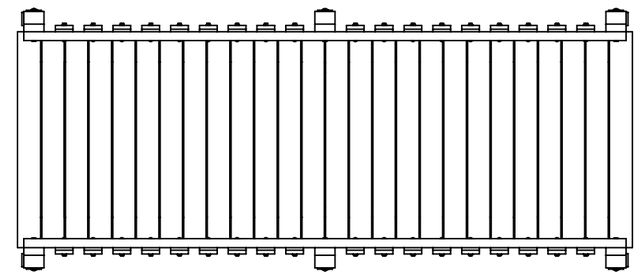

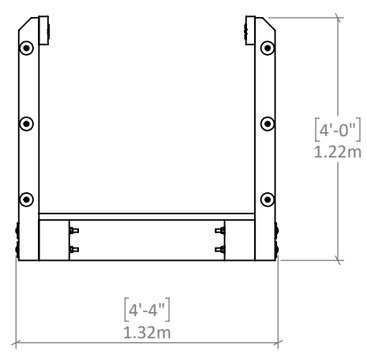

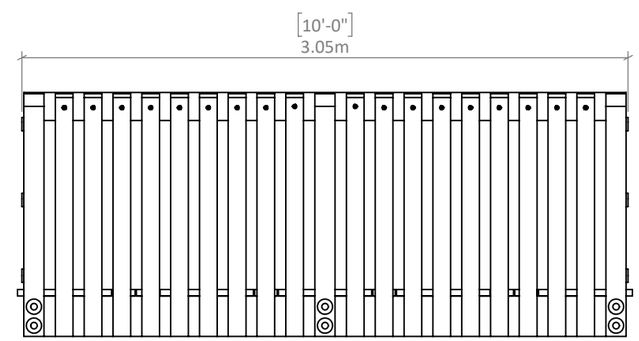

TIMBER BRIDGE SHIPPED PRE-ASSEMBLED AS SHOWN

PROPERTY OF EARTHSCAPE PLAY INC. - DO NOT COPY. DO NOT DISTRIBUTE.

STEP 1 - CONFIRM WHERE THE ACCESSORY IS TO BE INSTALLED

Review the complete tower installation package to determine on which side this accessory is to be installed and what the finished product should look like. The images shown on this page are representational and may not match your exact installation.

STEP 2 - INSTALL BRIDGE PRIOR TO ANCHORING TOWERS TO FOUNDATION PAD.

It might be necessary to make minor adjustments the position of the timber towers to suit the as-built bridge. Anchors towers after bridge has been installed.

STEP 3 - PREP BRIDGE AND CONFIRM GAP BETWEEN TOWERS IS SLIGHTLY LARGER THEN THE BRIDGE IS LONG.

Temporarily remove the end deckboard from both ends of bridge as per Figure 1. Make sure to note which end they came from and their orientation.

Measure distance between towers and compare to supplied bridge length. Pull towers away from each other enough to be able to fit bridge between.

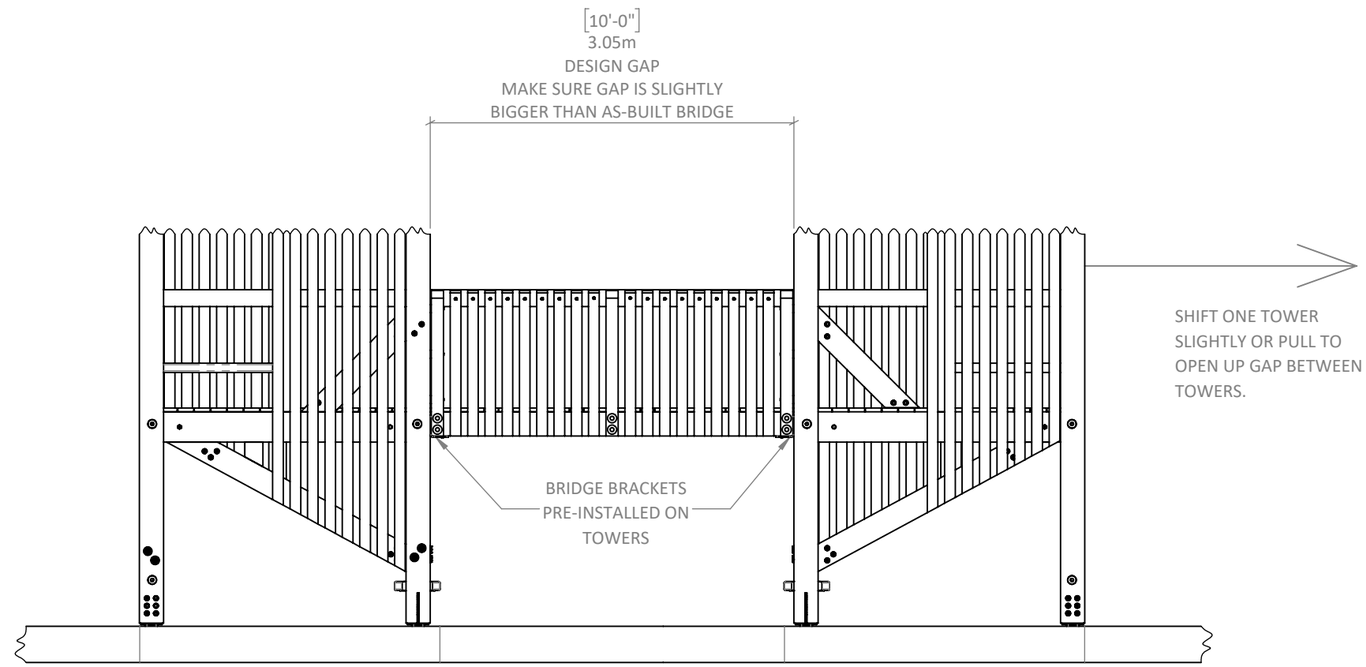

SAMPLE ELEVATION

(ACTUAL INSTALLATION MIGHT DIFFER FROM THIS VIEW. CHECK MAIN INSTALLTION PACKAGE TO SEE PORJECT SPECIFIC ARRANGMENT OF BRIDGE AND TOWERS

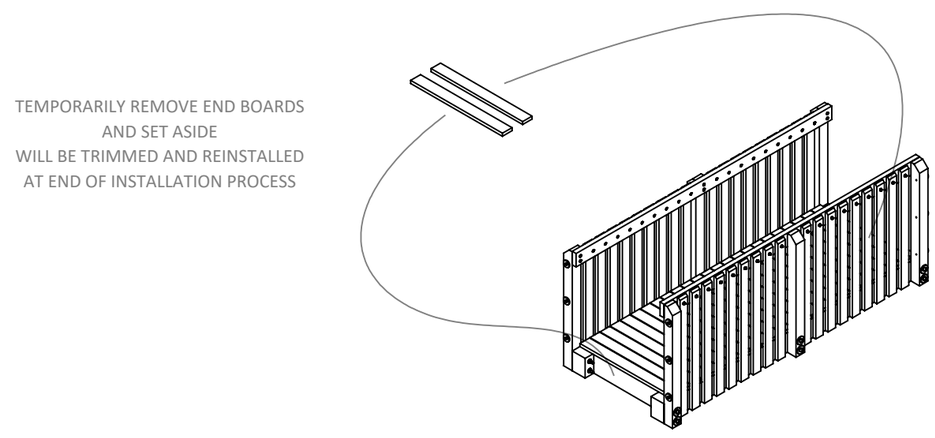

FIGURE 1

PROPERTY OF EARTHSCAPE PLAY INC. - DO NOT COPY. DO NOT DISTRIBUTE.

BRIDGE INSTALLATION 2 OF 3

10' WOODEN BRIDGE

STEP 4 - LIFT AND PLACE BRIDGE

Lift bridge with apporpriate equipment and move into position.
Lower bridge on to the 2 brackets pre-installed on the timber towers ensuring the bridge is centered in the tower opening.

STEP 5 - ADJUST POSITION OF TOWERS

Draw towers together so they are tight to the ends of the bridge.
Make minor adjustments to tower position to ensure both ends of bridge are centered in tower opening and that towers are tight to the end of the bridge.

STEP 6 - SECURE BRIDGE GUARDRAIL POSTS

Install screws through pre-dilled holes in end guardrail posts into timber tower posts.

Pre-drill all screw holes as per general notes.

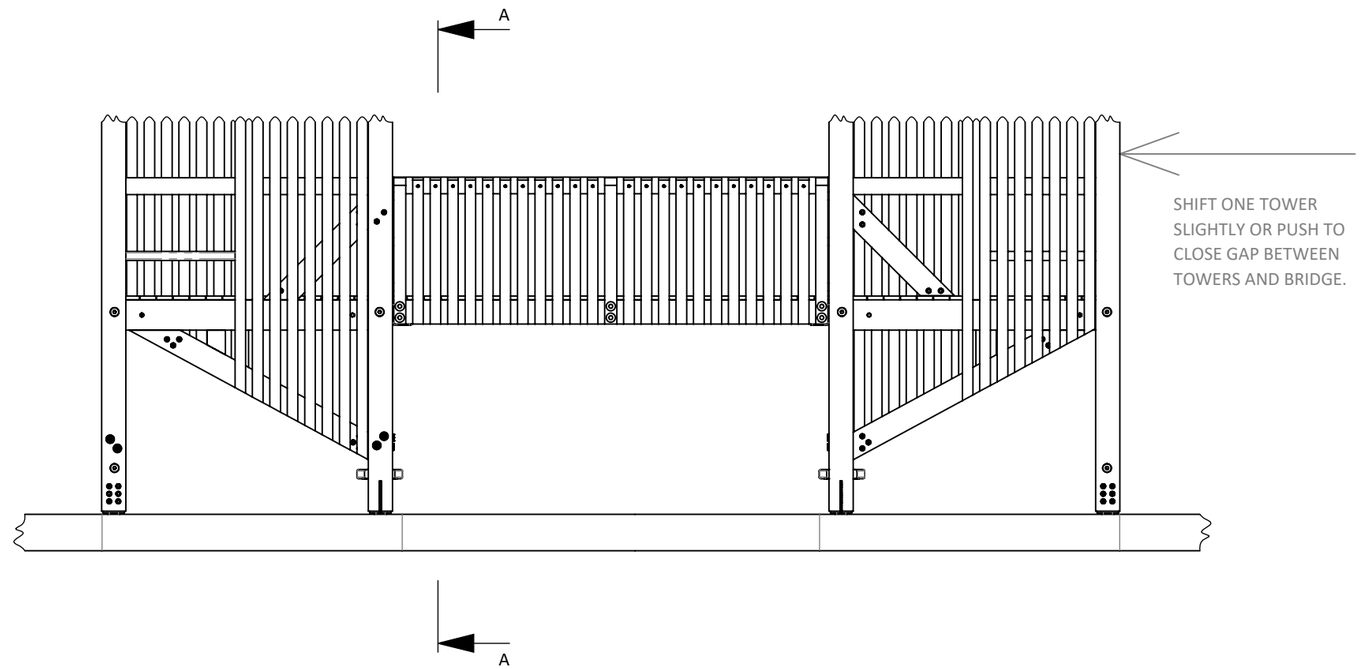

SAMPLE ELEVATION

(ACTUAL INSTALLATION MIGHT DIFFER FROM THIS VIEW. CHECK MAIN INSTALLTION PACKAGE TO SEE PORJECT SPECIFIC ARRANGMENT OF BRIDGE AND TOWERS

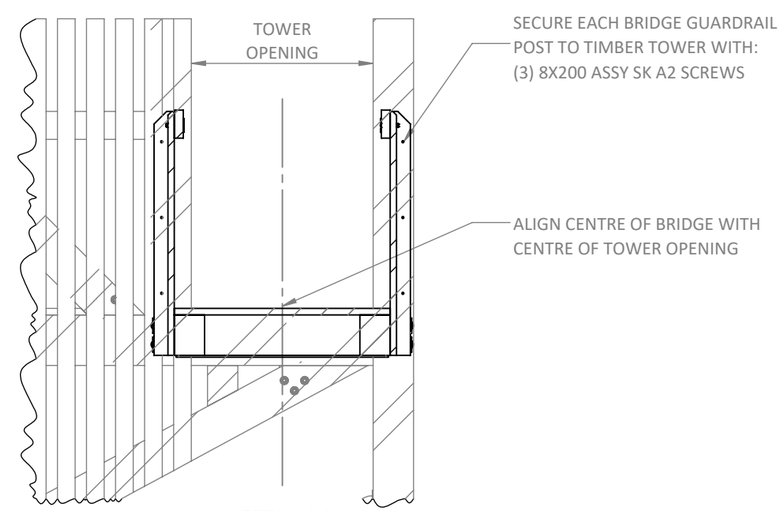

SECTION A-A

PROPERTY OF EARTHSCAPE PLAY INC. - DO NOT COPY. DO NOT DISTRIBUTE.

STEP 7 - SECURE BRIDGE STRINGERS

Install screws through bottom of steel brackets into underside of bridge timber stringers.

Pre-drill all screw holes as per general notes.

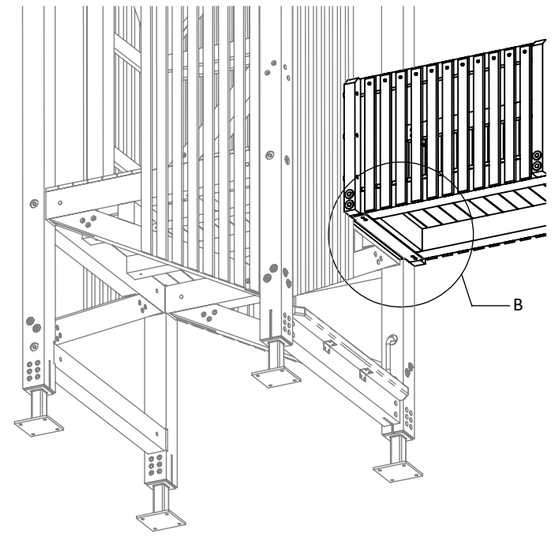

LOOKING UNDER BRIDGE

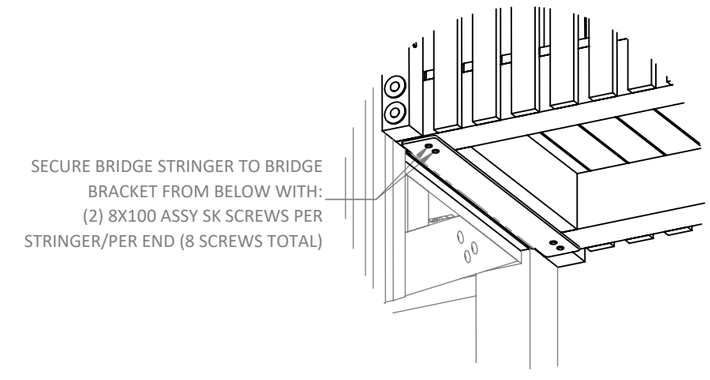

DETAIL B

STEP 8 - REINSTALL DECKBOARDS

Trim the removed deckboards to suit the gap in decking between the bridge and tower.

Ensure a +/-6mm (1/4") gap between deckboards as per Figure 2. Deckboards must not touch. Reinstall with the original screws.

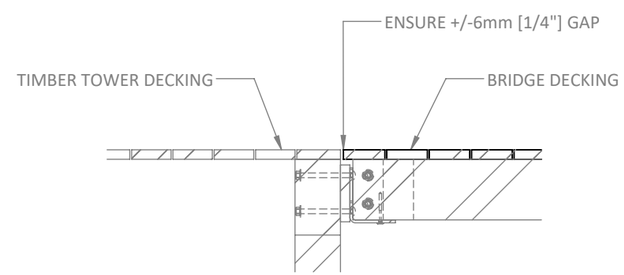

FIGURE 2

PROPERTY OF EARTHSCAPE PLAY INC. - DO NOT COPY. DO NOT DISTRIBUTE.

INSTALLATION INSTRUCTIONS

EARTHSCAPE COLLECTIONS

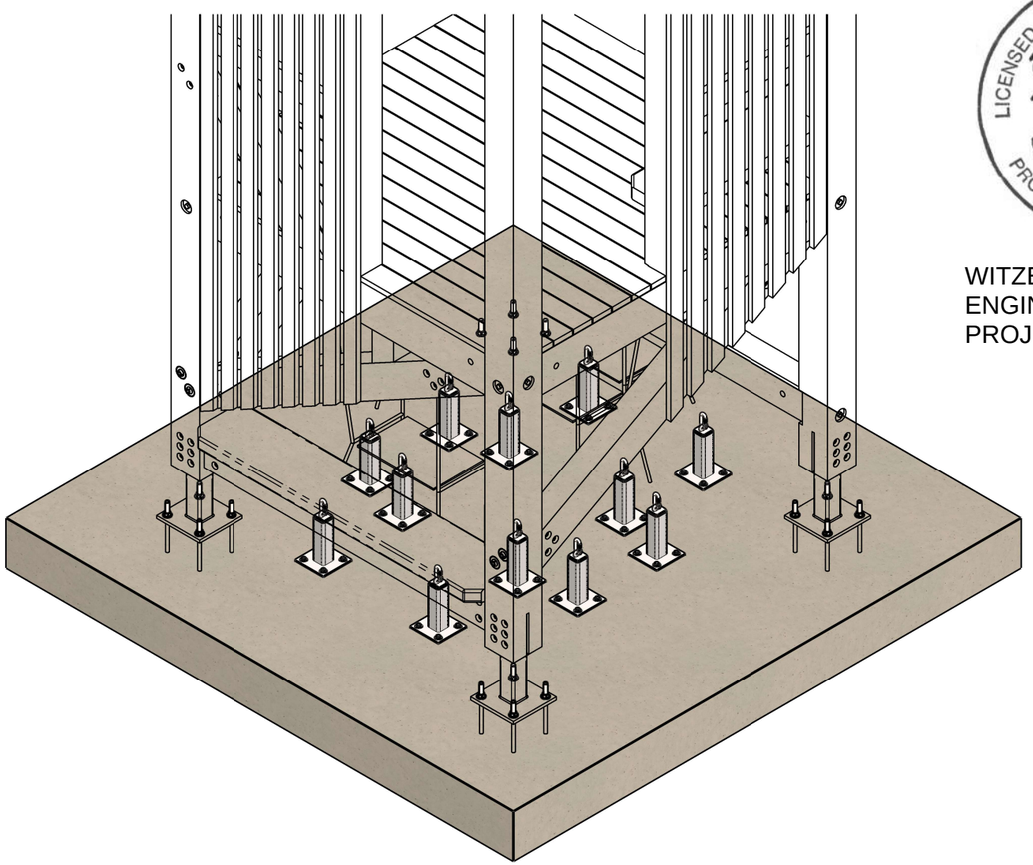

WITZEL DYCE
ENGINEERING INC.
PROJECT NO.: 12936-165

SLING SEATS - PIP

THESE INSTRUCTIONS APPLY TO THE FOLLOWING VERSIONS OF THIS PRODUCT:

F00403 - SLING SEATS - PIP

NOTE: COLOURS SHOWN ARE REPRESENTATIONAL AND MAY NOT BE THE SAME AS THOSE OF THE SUPPLIED PRODUCT

DATE DOCUMENT RELEASED 2022-06-05
DOCUMENT NUMBER: 1073938-R1

PROPERTY OF EARTHSCAPE PLAY INC. - DO NOT COPY. DO NOT DISTRIBUTE.

PLEASE READ ALL INSTRUCTIONS

Before starting to install this equipment be sure to read through and understand these instructions.

If you have any questions, contact your local dealer for assistance before proceeding.

MEASUREMENTS AND STANDARDS

Measurements have been provided in both metres and [feet-inches]. Ensure to follow standards noted for the location in which this play equipment is being installed. Those marked CSA are to be used in Canada and those marked ASTM to be used in the United States.

LIST OF ABBREVIATIONS

AYC = Alaskan Yellow Cedar
WRC = Western Red Cedar
DPS = Designated Play Surface
SS = Stainless Steel
HDG = Hot Dipped Galvanized
WWM = Welded Wire Mesh
TYP = Typical
C/W = Complete With
UNO = Unless Noted Otherwise
EWF = Engineered Wood Fiber
PIP = Poured-In-Place Rubber Surfacing
PT = Pressure Treated

TOOLS SUPPLIED WITH THIS PRODUCT

- No tools supplied

TOOLS THE INSTALLER NEEDS TO SUPPLY

- High torque drill
- 1/2" impact driver
- Set of socket - up to 3/4"
- Hammer drill
- Concrete drill bit, 1/2" x 8"
- Transit or Laser Level
- Rigging and lifting straps

EQUIPMENT THE INSTALLER NEEDS TO SUPPLY

- None

INSTALLER CREW AND TIME REQUIRED

Number of people needed: 2
Typical total person-hours to install: 4 hours
Time breakdown:

- 2 hours x 2 people for onsite fabrication and play equipment installation

MATERIALS THE INSTALLER NEEDS TO SUPPLY

- Threadmate threadlocker Vibra-Tite VC-3 (or equal)

WARNINGS

These instructions do not provide specific guidance on the use of tools or the lifting and moving heavy objects. It is assumed that competent people are installing this product who are familiar with using the tools and equipment required and are knowledgeable and skilled at lifting and positioning heavy objects.

PROPERTY OF EARTHSCAPE PLAY INC. - DO NOT COPY. DO NOT DISTRIBUTE.

MAKE SURE YOU HAVE ALL THE PARTS

Examine the equipment and ensure you have all the required parts listed in the table below.

PART IMAGE	ITEM NO.	PART NO.	DESCRIPTION	QTY.
SEE IMAGE THIS SHEET	1	B00022	CLIMBING NET ATTACHMENT POST - SURFACE MOUNT	12
	2	H30020	WASHER 1/2" X 1-3/8" SS	48
NO IMAGE PROVIDED	3	H60001	WELDED CHAIN 316 SS 0.375IN X 36IN LONG	12
	4	H60018	QUICK LINK 3/8" SS 316	12
	5	H60020	TITEN HD 1/2" X 5" CONCRETE SCREW	48

IMAGES OF FASTENERS IN THIS TABLE ARE REPRESENTATIONAL TO HELP IDENTIFY PARTS.

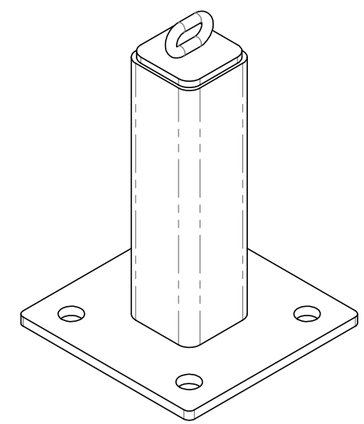

B00022 - CLIMBING NET ATTACHMENT POST

PROPERTY OF EARTHSCAPE PLAY INC. - DO NOT COPY. DO NOT DISTRIBUTE.

LOCATE PLAY EQUIPMENT

SLING SEATS - PIP

STEP 1 - LOCATING THE EQUIPMENT ON SITE

Layout the edges of the 12 Net Attachment Posts relative to the 1 level tower corner post base bracekts. Ensure you reference the correct side of the tower.

STEP 2 - SECURE BRACKETS TO CONCRETE FOUNDATION

Secure the bottom of the sling seat ropes (pre-installed on 1 level tower) to the Climbing Net Attachment Post as per Detail A this sheet.

Include 3/8" chain and quicklink as noted. Adjust length of chain as needed. Cut and dispose of excess.

STEP 3 - PIP SURFACING

Layout and installation of PIP surfacing is beyond the scope of these instructions, however, please refere to Typical PIP Surface Detail this sheet to see the intended cross section of the play surface relative to the Net Attachment Post bracket.

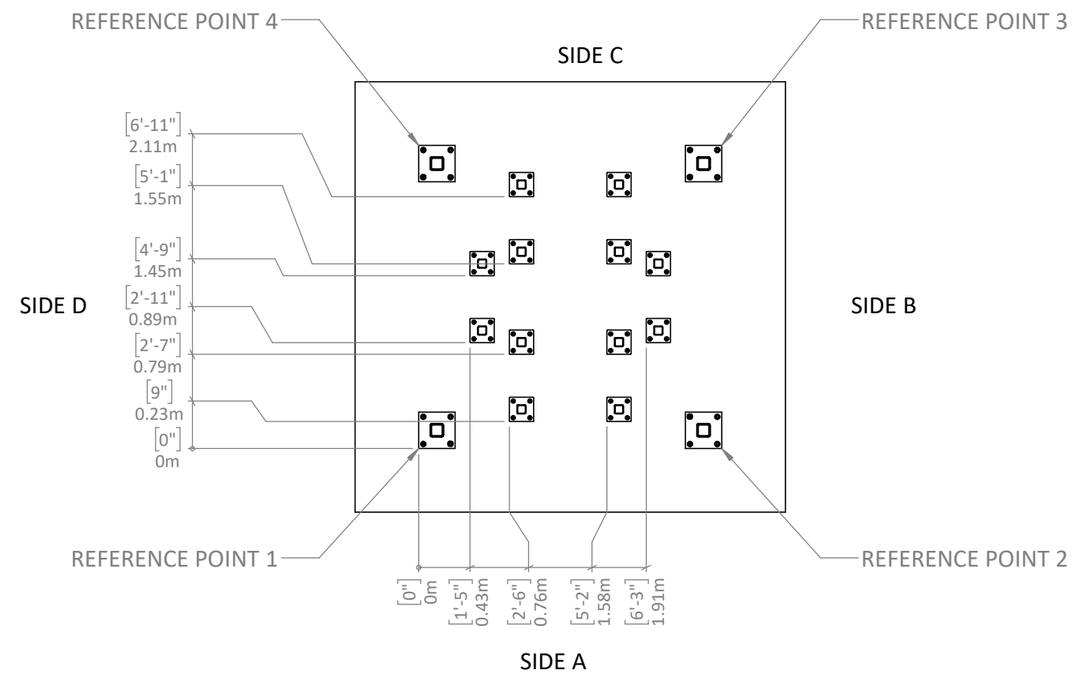

NET ATTACHMENT POST LAYOUT

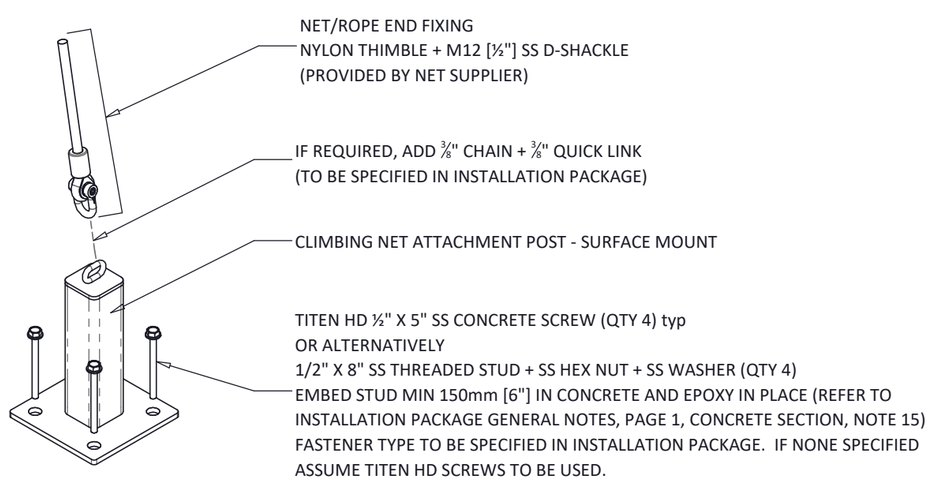

DETAIL A

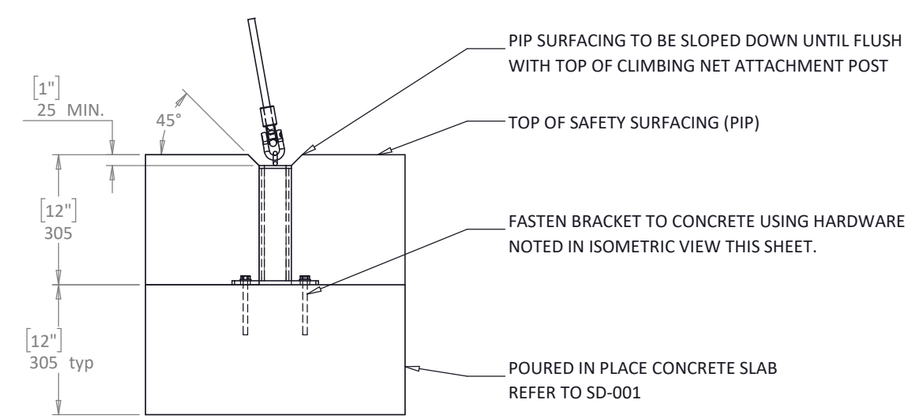

TYPICAL PIP SURFACING DETAIL

PROPERTY OF EARTHSCAPE PLAY INC. - DO NOT COPY. DO NOT DISTRIBUTE.

INSTALLATION INSTRUCTIONS

EARTHSCAPE COLLECTIONS

WITZEL DYCE
ENGINEERING INC.
PROJECT NO.: 12936-165

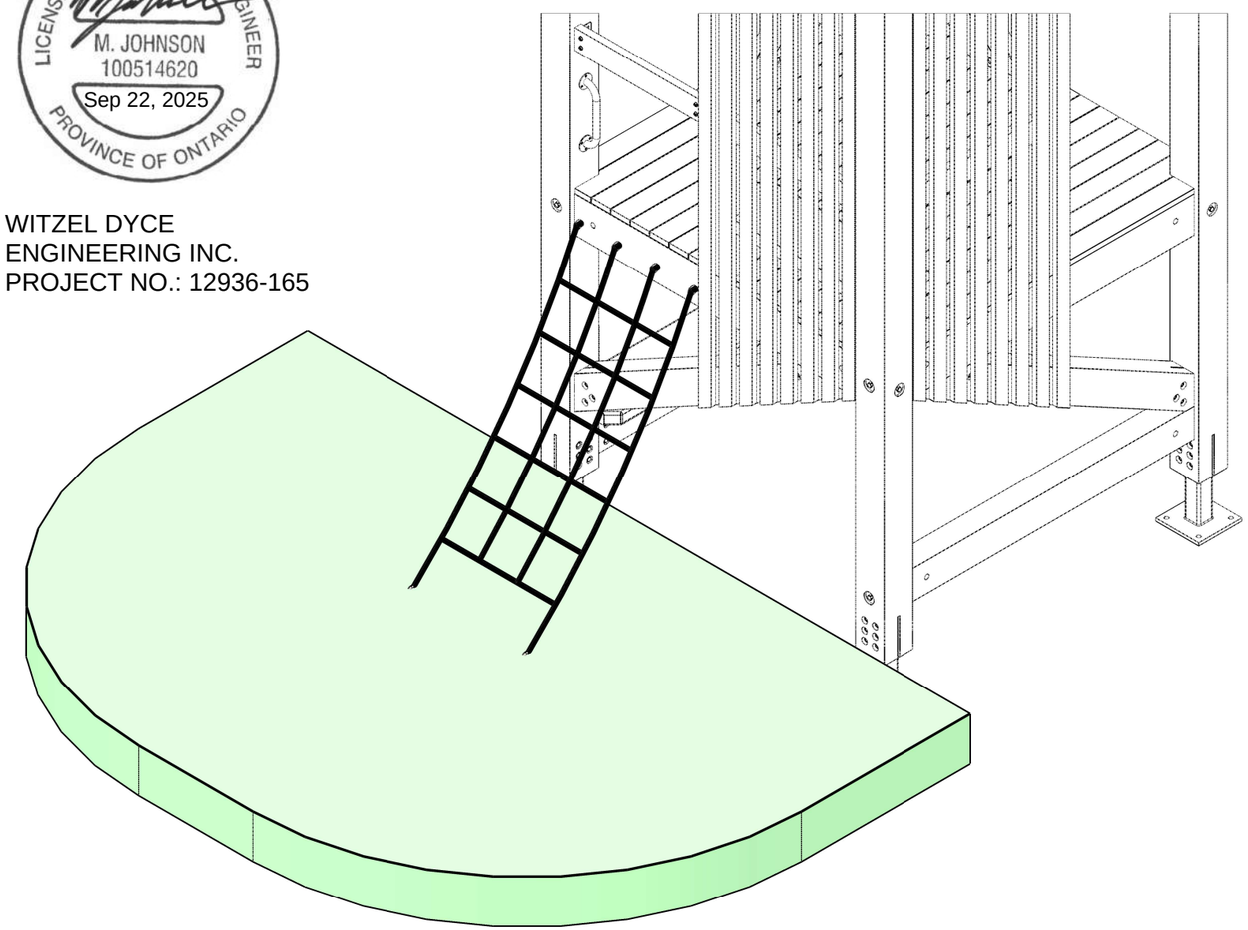

SAMPLE ISOMETRIC
(MAY NOT MATCH PROJECT SPECIFIC LOCATION OF SUB-ASSEMBLY)

ACCESS CLIMBING NET - PIP

THESE INSTRUCTIONS APPLY TO THE FOLLOWING VERSIONS OF THIS PRODUCT:

F00405 - ACCESS CLIMBING NET - PIP

WHICH IS DESIGNED TO BE INSTALLED ON THE FOLLOWING PRODUCTS:

F00185 - 1 LEVEL TIMBER TOWER
F00407 - 2 LEVEL TIMBER TOWER
F00408 - 3 LEVEL TIMBER TOWER

NOTE: COLOURS SHOWN ARE REPRESENTATIONAL AND MAY NOT BE THE SAME AS THOSE OF THE SUPPLIED PRODUCT

FOR CSA AND ASTM SPECIFICATIONS AND GENERAL NOTES SEE MAIN STRUCTURE INSTALLATION PACKAGE

DATE DOCUMENT RELEASED 2022-06-05
DOCUMENT NUMBER: 1073937-R1

PROPERTY OF EARTHSCAPE PLAY INC. - DO NOT COPY. DO NOT DISTRIBUTE.

PLEASE READ ALL INSTRUCTIONS

Before starting to install this equipment be sure to read through and understand these instructions.

If you have any questions, contact your local dealer for assistance before proceeding.

MEASUREMENTS AND STANDARDS

Measurements have been provided in both millimeters and [feet-inches]. Ensure to follow standards noted for the location in which this play equipment is being installed. Those marked CSA are to be used in Canada and those marked ASTM to be used in the United States.

LIST OF ABBREVIATIONS

AYC = Alaskan Yellow Cedar
WRC = Western Red Cedar
DPS = Designated Play Surface
SS = Stainless Steel
HDG = Hot Dipped Galvanized
WWM = Welded Wire Mesh
TYP = Typical
C/W = Complete With
UNO = Unless Noted Otherwise
EWF = Engineered Wood Fiber
PIP = Poured-In-Place Rubber Surfacing
PT = Pressure Treated

TOOLS SUPPLIED WITH THIS PRODUCT

- None supplied

TOOLS THE INSTALLER NEEDS TO SUPPLY

- Hammer drill
- Set of concrete drill bits - diameter and length as needed to install concrete screws
- High torque drill
- 1/2" ratcheting socket wrench
- Socket set up to 3/4"

EQUIPMENT THE INSTALLER NEEDS TO SUPPLY

- None

INSTALLER CREW AND TIME REQUIRED

Number of people needed: 2
Typical total person-hours to install: 2

Time breakdown:
- 1 hour x 2 person for onsite fabrication and play equipment installation

MATERIALS THE INSTALLER NEEDS TO SUPPLY

- Threadmate threadlocker Vibra-Tite VC-3 (or equal)

WARNINGS

These instructions do not provide specific guidance on the use of tools or the lifting and moving heavy objects. It is assumed that competent people are installing this product who are familiar with using the tools and equipment required and are knowledgeable and skilled at lifting and positioning heavy objects.

PROPERTY OF EARTHSCAPE PLAY INC. - DO NOT COPY. DO NOT DISTRIBUTE.

MAKE SURE YOU HAVE ALL THE PARTS

Examine the equipment and ensure you have all the required parts listed in the table below.

Access net comes pre-installed on tower.

PART IMAGE	ITEM NO.	PART NO.	DESCRIPTION	QTY.
SEE IMAGE THIS SHEET	1	B00022	CLIMBING NET ATTACHMENT POST - SURFACE MOUNT	2
	2	H30020	WASHER 1/2" X 1-3/8" SS	8
	3	H60020	TITEN HD 1/2" X 5" CONCRETE SCREW	8

IMAGES OF FASTENERS IN THIS TABLE ARE REPRESENTATIONAL TO HELP IDENTIFY PARTS.

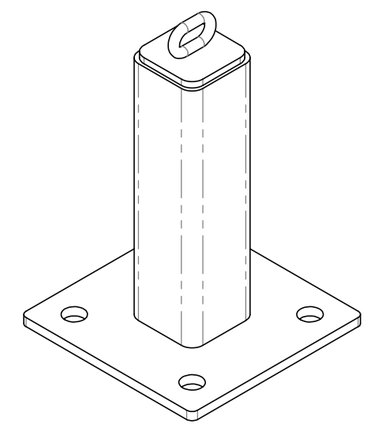

B00022 - CLIMBING NET ATTACHMENT POST

PROPERTY OF EARTHSCAPE PLAY INC. - DO NOT COPY. DO NOT DISTRIBUTE.

FINISHED PRODUCT

ACCESS CLIMBING NET - PIP

WHAT THE FINISHED PRODUCT LOOKS LIKE

Finished play surface and concrete foundations by Installer.

Foundation layout and details not shown in this package. Please review the main tower installation package for this information.

Views on this sheet may not match project specific location of the add-on accessory. It could be on a different side of the tower.
Review main tower installation package to see the position of this add-on for your specific project.

Layout and installation of PIP surfacing is beyond the scope of these instructions, however, please refere to Typical PIP Surface Detail this sheet to see the intended cross section of the play surface relative to the Net Attachment Post bracket.

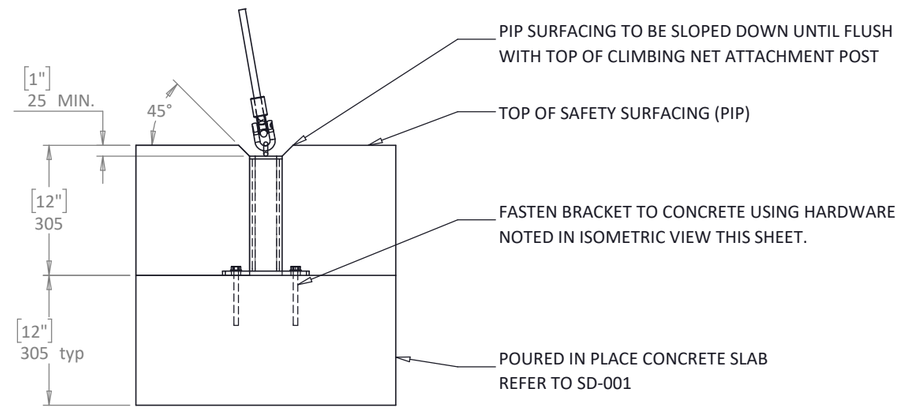

TYPICAL PIP SURFACE DETAIL

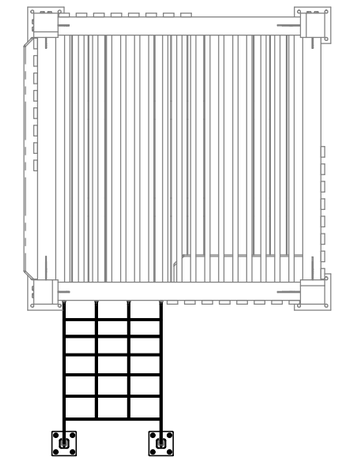

PLAN VIEW

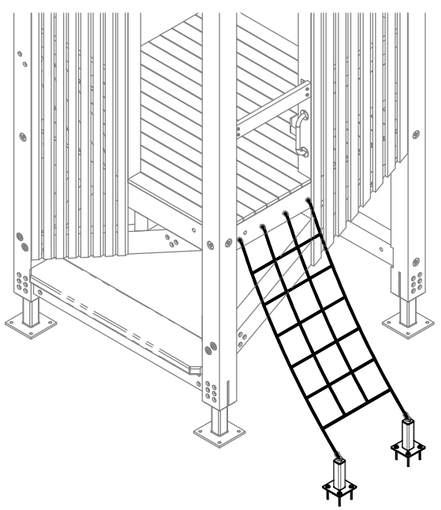

ISOMETRIC VIEW

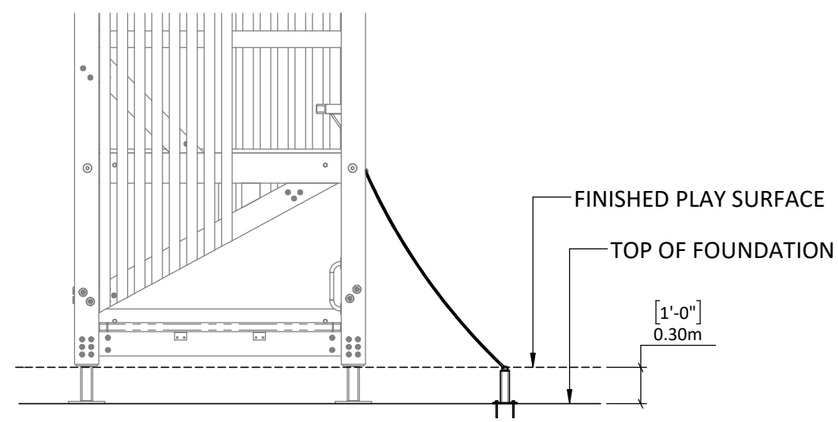

SIDE VIEW

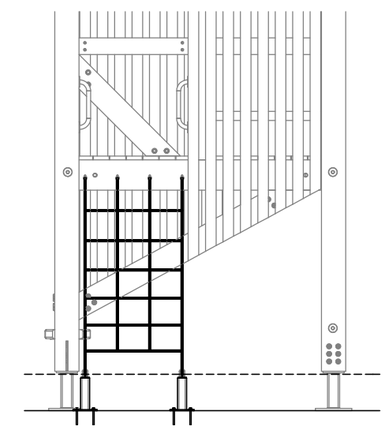

FRONT VIEW

PROPERTY OF EARTHSCAPE PLAY INC. - DO NOT COPY. DO NOT DISTRIBUTE.

LOCATE PLAY EQUIPMENT

ACCESS CLIMBING NET - PIP

STEP 1 - NET FOUNDATION

The concrete foundation needed for this add-on is illustrated in the main tower installation package and can vary from project to project. See main tower installation package for more information.

STEP 2 - PREPARE NET

Top end of net is pre-installed on tower. Unpack the net so it is hanging from the tower.

STEP 3 - LAYOUT CLIMBING NET ATTACHEMENT POSTS

Layout the position of the Climbing Net Attachment Post brackets as per the main tower installation package.

STEP 4 - CONNECT NET TO TOP OF POSTS

Connect the bottom end of the climbing net to the Attachement Posts as per Detail A this sheet.

STEP 5 - ADJUST ATTACHMENT POST POSITION AND SECURE TO CONCRETE PAD

Position the Attachement Posts to align with the layout marks and then check the tension in the net as noted in the Sample Elevation View this sheet.

If there is not enough sag, shift the attachment posts towards or away from the tower as needed until the correct sag is achiaved.

Secure the Attachment Posts to the pad with concrete screws as noted in Detail A this sheet.

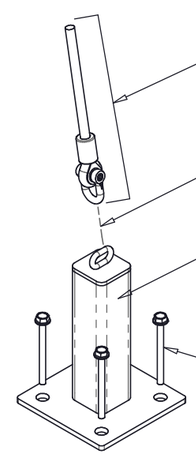

NET/ROPE END FIXING
NYLON THIMBLE + M12 [½"] SS D-SHACKLE
(PROVIDED BY NET SUPPLIER)

IF REQUIRED, ADD ⅜" CHAIN + ⅜" QUICK LINK
(TO BE SPECIFIED IN INSTALLATION PACKAGE)

CLIMBING NET ATTACHMENT POST - SURFACE MOUNT

TITEN HD ½" X 5" SS CONCRETE SCREW (QTY 4) typ
OR ALTERNATIVELY
1/2" X 8" SS THREADED STUD + SS HEX NUT + SS WASHER (QTY 4)
EMBED STUD MIN 150mm [6"] IN CONCRETE AND EPOXY IN PLACE (REFER TO INSTALLATION PACKAGE GENERAL NOTES, PAGE 1, CONCRETE SECTION, NOTE 15)
FASTENER TYPE TO BE SPECIFIED IN INSTALLATION PACKAGE. IF NONE SPECIFIED ASSUME TITEN HD SCREWS TO BE USED.

DETAIL A

APPLY THREADLOCK TO SECURE ALL SCREW CONNECTIONS

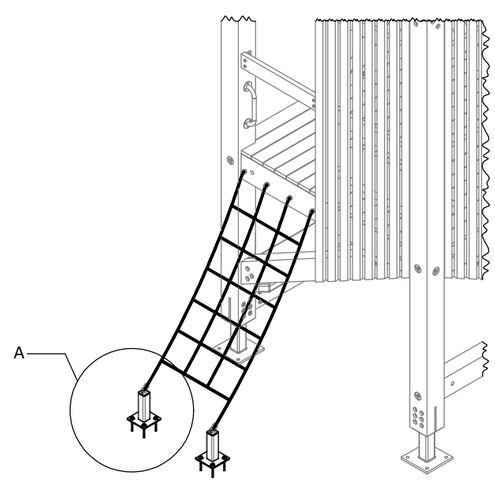

SAMPLE ISOMETRIC
(MAY NOT MATCH PROJECT SPECIFIC LOCATION OF SUB-ASSEMBLY)

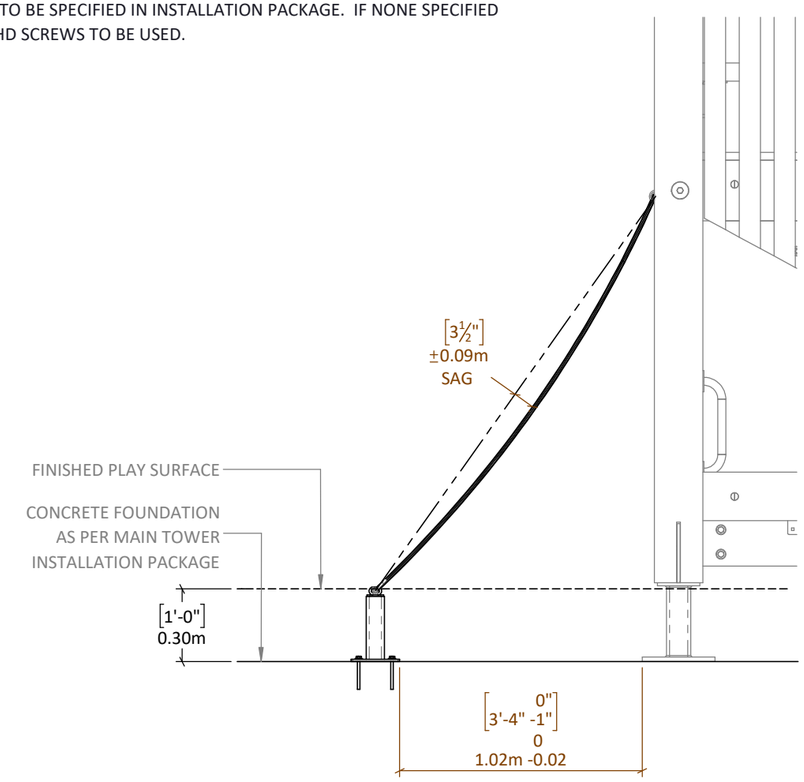

SAMPLE ELEVATION VIEW

Map of Targeted Areas and Species for Plant Management
Hurld Park Climate Resiliency Hub
Woburn, MA
March 2024

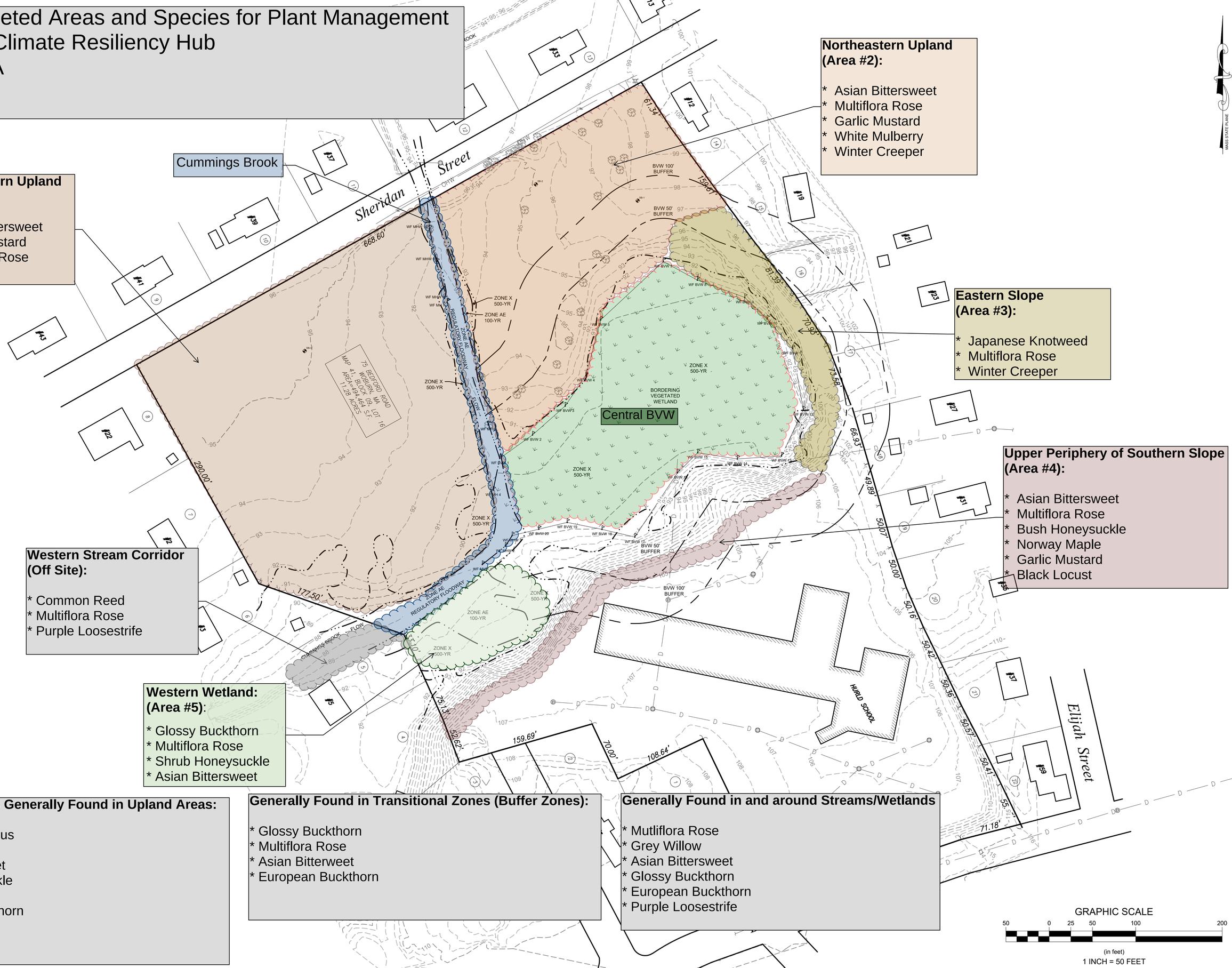

Northeastern Upland (Area #2):

* Asian Bittersweet
* Multiflora Rose
* Garlic Mustard
* White Mulberry
* Winter Creeper

Northwestern Upland (Area #1):

* Asian Bittersweet
* Garlic Mustard
* Multiflora Rose

Eastern Slope (Area #3):

* Japanese Knotweed
* Multiflora Rose
* Winter Creeper

Upper Periphery of Southern Slope (Area #4):

* Asian Bittersweet
* Multiflora Rose
* Bush Honeysuckle
* Norway Maple
* Garlic Mustard
* Black Locust

Western Stream Corridor (Off Site):

* Common Reed
* Multiflora Rose
* Purple Loosestrife

Western Wetland: (Area #5):

* Glossy Buckthorn
* Multiflora Rose
* Shrub Honeysuckle
* Asian Bittersweet

Invasive Species Generally Found in Upland Areas:

* Winged Euonymus
* Multiflora Rose
* Asian Bittersweet
* Bush Honeysuckle
* Garlic Mustard
* European Buckthorn
* Norway Maple
* Tree of Heaven

Generally Found in Transitional Zones (Buffer Zones):

* Glossy Buckthorn
* Multiflora Rose
* Asian Bitterweet
* European Buckthorn

Generally Found in and around Streams/Wetlands

* Mutliflora Rose
* Grey Willow
* Asian Bittersweet
* Glossy Buckthorn
* European Buckthorn
* Purple Loosestrife

GRAPHIC SCALE

50 0 25 50 100 200

(in feet)

1 INCH = 50 FEET

SPECIFICATIONS FOR CONSTRUCTION

1 GENERAL NOTES

1.1 THESE DESIGN DOCUMENTS WERE PREPARED BY 'VORTEX AQUATIC STRUCTURES INTERNATIONAL' FOR THE USE OF THEIR CLIENT ONLY. THE MATERIAL USED AND IDENTIFIED IN THEM REFLECTS VORTEX AQUATIC STRUCTURES INTERNATIONAL'S BEST JUDGMENT IN LIGHT OF THE INFORMATION AVAILABLE AT THE TIME OF PREPARATION. FOR THE PURPOSE OF THESE DESIGN DOCUMENTS, 'VORTEX AQUATIC STRUCTURES INTERNATIONAL' IS SYNONYMOUS WITH 'VORTEX'.

1.2 VORTEX ACCEPTS NO RESPONSIBILITY FOR DAMAGES, IF ANY, SUFFERED BY ANY THIRD PARTY AS A RESULT OF DECISIONS MADE OR ACTIONS BASED ON THESE DESIGN DOCUMENTS WITHOUT THE PREVIOUS CONSULTATION TO VORTEX.

1.3 ALL WORK, MATERIALS AND THEIR ASSEMBLIES SHALL CONFORM TO THE STANDARDS, REGULATIONS AND CODES CURRENTLY IN FORCE FOR ALL TRADES, AISC, ACNOR, EN, OR IBC.

1.4 THESE DESIGN DOCUMENTS DO NOT INDICATE THE METHOD OR MEANS OF CONSTRUCTION. WHEN APPLICABLE, THE CONTRACTORS SHALL SUPERVISE AND DIRECT ALL THE WORK AND SHALL BE SOLELY RESPONSIBLE FOR ALL CONSTRUCTION MEANS, METHODS, PROCEDURES AND SEQUENCES AS PER STANDARD BEST PRACTICES.

1.5 DO NOT SCALE DRAWINGS.

1.6 USE ONLY THOSE MARKED "ISSUED FOR CONSTRUCTION".

1.7 THE CONTRACTOR SHALL REVIEW THESE DESIGN DOCUMENTS AND REPORT ANY CONFLICTS OR OMISSIONS TO THE VORTEX IMMEDIATELY.

1.8 TEMPORARY SUPPORTS, WHICH WILL BE REQUIRED DURING CONSTRUCTION, SUCH AS FORMWORK, BRACING, SHORING, ETC. ARE NOT SHOWN ON THESE DRAWINGS AND ARE THE RESPONSIBILITY OF THE CONTRACTOR. THE CONTRACTOR IS RESPONSIBLE TO ENSURE THAT ALL SAFE CONSTRUCTION PROCEDURES ARE FOLLOWED.

1.9 THE FOLLOWING SPECIFICATIONS ARE VORTEX'S MINIMUM RECOMMENDATIONS TO OBTAIN A QUALITY PRODUCT. THE CONTRACTOR SHALL FOLLOW THE LOCAL CODES IF MORE RESTRICTIVE.

1.10 ALL SEEFLOW COMPONENTS TO BE SNUG-TIGHT ONLY. USING POWER TOOLS OR TIGHTEN HARDWARE FULLY-TENSIONED CAN PRODUCE CRACKING ON THE PLASTIC.

2 EXCAVATION

2.1 ANY SHORING OR TEMPORARY SHORING NOT SHOWN ON DRAWINGS WILL BE EXECUTED, IN A SAFE MANNER, BY THE GENERAL CONTRACTOR.

2.2 IT IS THE RESPONSIBILITY OF OTHERS TO VERIFY THE EXISTENCE OF ANY UNDERGROUND SERVICES ETC.

2.3 IF AVAILABLE, REFER TO SOIL REPORT FOR BACKFILL REQUIREMENTS. ALL BACKFILL (FOR SLAB ON GRADE, ETC.) MUST BE DONE IN ACCORDANCE WITH THE RECOMMENDATIONS OF A QUALIFIED PROFESSIONAL. USE ONLY FREE DRAINING, GRANULAR, MINERAL, INERT AND NON- REACTIVE FILL.

3 FOUNDATIONS

3.1 REFER TO SOIL REPORT FOR RECOMMENDATIONS.

3.2 ALL FOOTINGS SHALL REST ON A HOMOGENEOUS LAYER OF UNDISTURBED SOIL OR ENGINEERED BACKFILL WITH A MINIMUM ALLOWABLE BEARING CAPACITY OF 100KPA (2000 PSF) AND MAXIMUM DIFFERENTIAL SETTLEMENT OF 19 MM (0.75"). ALL ORGANIC MATERIAL SHALL BE REMOVED.

3.3 IT IS THE CONTRACTOR'S RESPONSIBILITY TO ENSURE THAT THE SOIL AT ALL FOOTING LOCATIONS BE VERIFIED BY A QUALIFIED SOILS EXPERT BEFORE POURING FOOTINGS TO ENSURE FOOTINGS REST ON APPROPRIATE STRATA.

3.4 WHEN APPLICABLE, FOLLOW GEOTECHNICAL EXPERT RECOMMENDATIONS FOR ALL EXTERIOR FOOTINGS TO ENSURE FROST PROTECTION.

4 CONCRETE

4.1 ALL CONCRETE MATERIALS, PROCEDURES, TOLERANCES & WORKMANSHIP SHALL CONFORM TO THE LATEST ISSUES OF ACI-318 AND ACI 317 OR ACNOR CAN3-A23.1 & A23.2, DEPENDING ON PROJECT LOCATION.

4.2 CONCRETE THAT HAS BEEN IN THE TRUCKS LONGER THAN 2 HOURS SHALL BE REJECTED. DO NOT ADD WATER TO THE CONCRETE IN THE TRUCKS OR ON THE SITE UNDER ANY CIRCUMSTANCES.

4.3 USE MAXIMUM 76mm (3") SLUMP, 19mm (3/4") AGGREGATE, UNLESS OTHERWISE-NOTED. USE 5-7% AIR ENTRAINMENT FOR CONCRETE EXPOSED TO WEATHER ONLY.

4.4 ALL GROUT SHALL BE NON-SHRINK TYPE WITH A MINIMUM 28 DAYS STRENGTH OF 35.0 MPA (5000 PSI). USE 25 MM (1") GROUT UNDER ALL STEEL COLUMN BASE PLATES.

4.5 CONCRETE STRENGTH @ 28 DAYS TO BE:

4.5.1 FOUNDATIONS (FOOTINGS): 25.0 MPA (3500 PSI), UNLESS OTHERWISE NOTED.

4.5.2 INTERIOR SLAB ON GRADE: 25.0 MPa (3500 PSI), UNLESS OTHERWISE NOTED.

4.5.3 EXTERIOR SLAB ON GRADE: 32.0 MPa (4500 PSI), UNLESS OTHERWISE NOTED.

4.6 MINIMAL RE-BAR COVER:

4.6.1 CONCRETE POURED ON-GRADE = 76mm (3") COVER

4.6.2 CONCRETE POURED INTO FORMWORK BUT EXPOSED TO SOIL AND WEATHER FOR REBAR 15m (#4) AND UNDER = 50mm (2") COVER

5 REINFORCING STEEL

5.1 DEPENDING ON PROJECT LOCATION, ALL REINFORCING STEEL SHALL CONFORM TO ASTM A615 (BARS 15m (#4) TO BE GRADE 60 WITH SUPPLEMENTARY REQUIREMENTS ON S1.

BARS SMALLER THAN 15m (#4), TO BE GRADE 40); OR TO ACNOR GRADE G30.12 [FY = 400MPA (60,000 PSI), UNLESS OTHERWISE NOTED].

5.2 USE CONCRETE, PLASTIC OR STEEL SUPPORT BARS, AS PER ACI (MANUAL OF STANDARD PRACTICE FOR DETAILING CONCRETE STRUCTURES). THE RE-BAR PLACER MUST REMAIN ON-SITE DURING POURS TO VERIFY CORRECT POSITIONING OF RE-BARS. SLANT UPPER REINFORCING STEEL IN LINE WITH THE SLOPE OF THE SLAB, IF APPLICABLE.

5.3 BARS SHALL BE SECURELY WIRED PER LATEST EDITION OF CRSI (RECOMMENDED PRACTICE FOR PLACING REINFORCING BARS).

5.4 ALL REINFORCING STEEL IS TO BE KEPT CLEAN AND FREE OF MUD, SNOW, ICE, AND ANY CONTAMINANTS.

5.5 VERTICAL AND CONTINUOUS REBAR SHALL BE LAPPED TO DEVELOP FULL TENSILE CAPACITY OF THE BAR. FOR 15M (#4) BARS MINIMUM LAP OF 610mm (24").

6 EXTERIOR / INTERIOR SLAB ON GRADE

6.1 FOLLOW THE GEOTECHNICAL EXPERT RECOMMENDATIONS FOR PREPARATION OF SOIL BEFORE POURING THE CONCRETE. ALL GRANULAR MATERIAL SHALL BE MOISTENED

IMMEDIATELY BEFORE POURING THE CONCRETE. WATER AS NEEDED. DO NOT USE A VAPOR BARRIER.

6.2 NO TRUCKS ARE PERMITTED ON THE CONSTRUCTION SITE (OF THE SLAB) AFTER THE FINAL COMPACTION, EITHER BEFORE OR DURING, THE POUR.

6.3 SLAB TO BE MINIMUM 6" THICK, REINFORCED WITH 10m (#3) @ 300mm (12") C/C REBAR PLACED IN BOTH DIRECTIONS AT MID-HEIGHT OF THE SLAB, UNLESS OTHERWISE NOTED ON PLANS.

6.4 REFER TO CONCRETE SECTION FOR MINIMUM COMPRESSIVE STRENGTH AND AIR-ENTRAINMENT REQUIREMENTS.

6.5 FINISHING WILL BE MEDIUM BROOM.

6.6 CONTROL JOINTS (SAW-CUTS) TO BE LOCATED IN EACH DIRECTION, AT REGULAR INTERVALS, WITH A MAXIMUM DISTANCE OF 3 METERS (10 FEET). SHALL BE MINIMUM 3 MM (1/8") WIDE AND SHALL PENETRATE THE SLAB TO A MINIMUM DEPTH OF 1/3 OF THE THICKNESS OF THE SLAB. CONTROL JOINTS SHOULD BE DONE AS SOON AS POSSIBLE WITHOUT DAMAGING THE CONCRETE, BUT NO LATER THAN 18 HOURS AFTER POURING.

6.7 WHEN POSSIBLE AND TO AVOID SHRINKAGE CRACKING, HUMIDITY SHALL BE MAINTAINED FOR 7 DAYS DURING THE CURING PERIOD OF THE SLAB. WATER AND USE POLYETHYLENE CLOTH OR BAG. THE CONCRETE MUST DRY UNIFORMLY.

7 CONCRETE WORK IN COLD OR HOT WEATHER (MINIMUM REQUIREMENTS)

7.1 COLD WEATHER REQUIREMENTS APPLY WHEN THE MEAN AIR IS LESS THAN 5 DEGREES CELSIUS (40 DEGREES FAHRENHEIT).

7.2 GENERAL REQUIREMENTS FOR COLD WEATHER CONCRETE WORK SHALL BE AS PER ACI 306R-88; OR AS PER THE NBC'S LATEST REQUIREMENTS INCLUDING THE LATEST ISSUE OF CSA STANDARD CAN3-A23.1.

7.3 ALL SNOW AND ICE SHALL BE REMOVED FROM FORMS AND REBAR WITH STEAM AND COMPRESSED AIR BEFORE POURING. DO NOT USE DE-ICING SALT (CALCIUM CHLORIDE) OR ANY OTHER SALTS UNDER ANY CIRCUMSTANCES.

7.4 CONCRETE SHALL HAVE A MINIMUM TEMPERATURE OF 20 DEGREES CELSIUS AND A MAXIMUM TEMPERATURE OF 25 DEGREES CELSIUS WHILE POURING. IT IS THE CONTRACTOR'S RESPONSIBILITY TO ENSURE THAT THESE REQUIREMENTS ARE SATISFIED. ANY CONCRETE THAT DOES NOT CONFORM MUST BE REJECTED.

7.5 THE SURFACE OF POURED CONCRETE SHALL BE PROTECTED BY MEANS OF SUITABLE COVERINGS AND INSULATION (TO BE DETERMINED BY TEMPERATURE) DURING THE CURING PROCESS.

7.6 GENERAL REQUIREMENTS FOR HOT WEATHER CONCRETE WORK SHALL BE AS PER ACI 305R-99; OR AS PER LOCAL CODE REQUIREMENTS.

8 PIPING

8.1 WDS CONFIGURATION ARE SCHEMATIC AND MAY BE MOVED OR ADJUSTED ON SITE BY VORTEX CERTIFIED INSTALLER TO ADJUST FOR SITE CONDITIONS.

8.2 ANY REQUIRED BACKFLOW PREVENTER, PRESSURE REGULATOR & WATER METER ON THE CITY WATER MAIN SHALL BE PROVIDED BY OTHER.

8.3 ALL PIPE LINES TO FEATURES TO HAVE A 1% MINIMUM RECOMMENDED SLOPE FOR PROPER WINTERIZATION.

8.4 ALL LINE SIZING (FEATURE CONNECTION TABLE) ASSUMES A MAXIMUM DISTANCE OF 30 FEET BETWEEN THE WATER DISTRIBUTION MANIFOLD AND THE FURTHEST PLAY PRODUCT. DISTANCES ABOVE 30 FEET MAY REQUIRE AN INCREASE IN LINE SIZING. PLEASE CONTACT VORTEX.

8.5 FINAL LOCATION OF DRAIN AND LINE ROUTING ARE TO BE DETERMINED BY OTHERS.

8.6 PRESSURE LINES ARE RECOMMENDED TO BE SCHEDULE K-COPPER, AND NON-PRESSURE LINES TO BE SCHEDULE 40, UNLESS OTHERWISE REQUESTED BY LOCAL CODE.

8.7 DRAINAGE LINES ARE RECOMMENDED TO BE SDR 35, UNLESS OTHERWISE REQUESTED BY LOCAL CODE.

8.8 PIPING SHOULD BE INSPECTED AFTER TRANSPORTATION FOR CUTS, SCRATCHES, GOUGES OR SPLITS; DAMAGED SECTIONS MUST BE DISCARDED OR CUT OUT.

8.9 PIPE SHALL BE INSTALLED BELOW THE FROST LEVEL NOT LESS THAN 12" (ASTM F-645) UNLESS OTHERWISE REQUESTED BY LOCAL CODE.

8.10 PIPE INSTALLATION MINIMUM COVER SHOULD BE EVALUATED ACCORDING TO ASTM D-2774, UNLESS OTHERWISE REQUESTED BY LOCAL CODE.

8.11 SPECIAL CONSIDERATIONS SHOULD BE TAKEN FOR THERMAL CONDITIONS, EXPANSION AND CONTRACTIONS DUE TO TEMPERATURE SHOULD BE EVALUATED BEFORE THE INSTALLATION BY THE CONTRACTOR.

8.12 MINIMUM 50 PSI REQUIRED AT THE INLET OF THE BACKFLOW PREVENTER AND PRESSURE REGULATING DEVICE.

8.13 MAXIMUM FLOW CAPACITY OF HYDRAULIC ACTIVATOR IS 45 GPM.

8.14 TOTAL FLOW OF THE FEATURES IS 48.4 GPM.

8.15 THERE IS NO SEQUENCING, FEATURES ARE ON WHEN ACTIVATOR IS PRESSED.

9 ELECTRICAL

9.1 EQUIPMENT BONDING; FEATURES SHALL BE CONNECTED TO AN EQUIPOTENTIAL BONDING GRID WITH A SOLID RIGID COPPER CONDUCTOR, THE MINIMUM SIZE OF BONDING CONDUCTORS NOT BE SMALLER THAN #6 AMERICAN WIRE GAUGE (AWG) ($16mm^2$) COPPER. BOND TO ALL METALLIC PARTS LOCATED IN THE SPLASHPAD/POOL AND TO THE REBAR, TO RUN CONTINUOUS TO THE WATER PUMP AND ELECTRICAL SUPPLY PANELS.

9.2 GRID STRUCTURE; THE EQUIPOTENTIAL BONDING GRID SHALL COVER THE CONTOUR OF THE WATER BODY AREA AND ANY DECK EXTENDING 3FT (1m). HORIZONTALLY FROM THE INSIDE WALLS OF THE SPLASHPAD/WATER BODY. THE EQUIPOTENTIAL BONDING GRID SHALL BE ARRANGED IN A 12 IN (300mm). BY 12 IN (300mm). NETWORK OF CONDUCTORS IN A UNIFORMLY SPACED PERPENDICULAR GRID PATTERN WITH TOLERANCE OF 4 IN (100mm). A J-JUNCTION BOND CLAMP (DIRECT BURIAL CERTIFIED) CLAMPED TO A REBAR WITH WIRE LOOPED THROUGH CONNECTOR AND CLAMPED TO STEEL AND TO THE SPLASHPAD/POOL PUMP WATER

9.3 ALL ELECTRICAL EQUIPMENT SHALL BE GROUNDED; THE FOLLOWING EQUIPMENT SHALL BE GROUNDED. ALL ELECTRICAL EQUIPMENT LOCATED WITHIN 5FT (1.5 m) OF THE INSIDE WALL OF THE SPECIFIED BODY OF WATER." THIS EQUIPMENT ALSO INCLUDES (BUT NOT LIMITED TO): FEATURES, ELEVATIONS, DRAIN, REBAR, WATER INLET, SKIMMER, LADDER, SLIDES, DIVING STRUCTURE, UNDERWATER LIGHTING, JUNCTION BOXES, AND WATER CIRCULATING/HEATING EQUIPMENT.

ALL BONDING AND GROUNDING MUST COMPLY WITH NEC, CEC, AND LOCAL CODES.

9.4 ALTERNATE MEANS; WHERE STRUCTURAL REINFORCING STEEL IS NOT AVAILABLE OR IS ENCAPSULATED IN A NONCONDUCTIVE COMPOUND, A COPPER CONDUCTOR(S) SHALL BE UTILIZED WHERE THE FOLLOWING REQUIREMENTS ARE MET: (1) AT LEAST ONE MINIMUM 6 AWG BARE SOLID COPPER CONDUCTOR SHALL BE PROVIDED. (2) THE CONDUCTORS SHALL FOLLOW THE CONTOUR OF THE PERIMETER SURFACE. (3) ONLY LISTED SPLICES SHALL BE PERMITTED. (4) THE REQUIRED CONDUCTOR SHALL BE 18 IN TO 24 IN (450mm TO 600mm) FROM THE INSIDE WALLS OF THE POOL. (5) THE REQUIRED CONDUCTOR SHALL BE SECURED WITHIN OR UNDER THE PERIMETER SURFACE (4 IN TO 6 IN (100mm TO 150mm). BELOW THE SUBGRADE.

9.5 SPLASHPAD/POOL WATER; WHERE NONE OF THE BONDED PARTS IS IN DIRECT CONNECTION WITH THE POOL WATER, THE POOL WATER SHALL BE IN DIRECT CONTACT WITH AN APPROVED CORROSION-RESISTANT CONDUCTIVE SURFACE THAT EXPOSED NOT LESS THAN 9 IN.2 ($5800mm^2$) OF SURFACE AREA TO THE POOL WATER AT ALL TIMES. THE CONDUCTIVE SURFACE SHALL BE LOCATED WHERE IT IS NOT EXPOSED TO PHYSICAL DAMAGE OR DISLODGEMENT DURING USUAL POOL ACTIVITIES, AND IT SHALL BE BONDED IN ACCORDANCE WITH NEC, CEC, AND LOCAL CODES.

Drawing #	Drawing Name	Rev #
P-001	Plumbing Layout	00
E-003	Bonding Layout	00

VORTEX USA Inc.
3500 South Dupont Highway, Suite EP-101
Dover, Delaware
United States 19901
Phone: +1 (877) 586-7839

COPYRIGHT VORTEX USA Inc-THIS DOCUMENT AND THE IDEAS, RENDERINGS AND OTHER CONTENTS CONTAINED THEREIN ARE THE SOLE PROPETY OF VORTEX USA Inc AND MAY NOT BE DISSEMINATED, COPIED, REPRODUCED OR OTHERWISE USED WITHOUT PRIOR WRITTEN CONSENT OF VORTEX USA Inc.

Hurld Park Splashpad

Abbreviations	
A	Architectural
C	Civil Work
P	Plumbing Layout
PD	Plumbing Details
E	Electrical Layout
ED	Electrical Details
FT	Feature Drawings

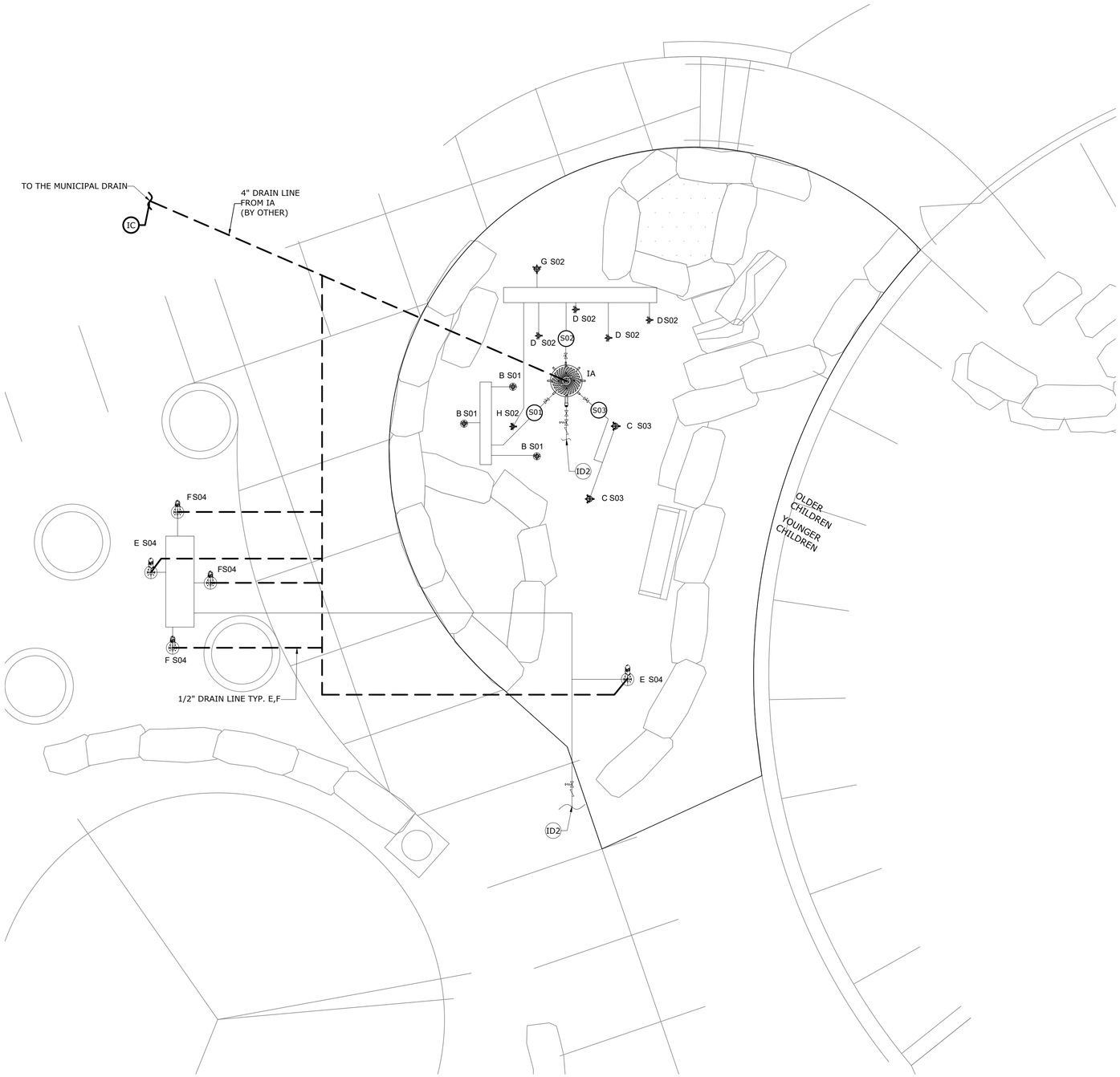

1 / P-001 PLUMBING LAYOUT

WATER LINE
DRAIN LINE

Feature Connection Table						
Manifold Output Ref.	Gate Valve	Feature Ref.	Feature	Qty	Line Size	Gpm
S01	1"	B	Water Jelly N°1 VOR 7010	3	1 1/2"	18.0
S02	1"	D	Jet Stream N°1 VOR 7512	4	1 1/2"	10
		G	Sparkle N°1 VOR 0324	1		3
		H	Geyser N°1 VOR 0301	1		7.5
S03	1"	C	Magic Mist N°2 VOR 8099	2	1"	9

Manifold Output Ref.	Feature Ref.	Feature	Qty	Line Size	Gpm
S04	E	Glomist VOR 7247	2	1"	0.8
	F	Glomist Nano VOR 7248	3		0.6

Product Legend		
Product Ref.	Product	Qty
IA	Push Button Activator VOR 0605	1
IC	4" Drain Line To Municipal Drain (By Other)	1
ID1	1 1/2" City Water Line (By Other)	1
ID2	1" City Water Line (By Other)	1
	1 1/2" Pressure Regulator (by Other)	1
	1 1/2" Backflow Preventer (by Other)	1
	1" Pressure Regulator (by Other)	1
	1" Backflow Preventer (by Other)	1
	1 1/2" Ball Valve located Inside Hydraulic Activator (by Vortex)	1
	1" Gate Valve located inside the Hydraulic Activator (by Vortex)	3

VORTEX

VORTEX USA Inc.
3500 South Dupont Highway, Suite EP-101
Dover, Delaware
United States 19901
Phone: +1 (877) 586-7839

COPYRIGHT VORTEX USA Inc-THIS DOCUMENT AND THE IDEAS, RENDERINGS AND OTHER CONTENTS CONTAINED THEREIN ARE THE SOLE PROPETY OF VORTEX USA Inc AND MAY NOT BE DISSEMINATED, COPIED, REPRODUCED OR OTHERWISE USED WITHOUT PRIOR WRITTEN CONSENT OF VORTEX USA Inc.

Hurld Park Splashpad

Project Location
Woburn, MA

Project Number
42368

Version
VC

Date	Revision Description	No.	By
05/Nov/2025	Issued for Approval	00	SN

Drawing Title
Plumbing Layout

Drawn by	Verified by
SN	MAB
Scale	**Date**
1/4"=1'-0"	05/Nov/2025

Page #
P-001

Ref	Product	Qty
IA	Push Button Activator VOR 0605	1
B	Water Jelly N°1 VOR 7010	3
C	Magic Mist N°2 VOR 8099	2
D	Jet Stream N°1 VOR 7512	4
E	Glomist VOR 7247	2
F	Glomist Nano VOR 7248	3
G	Sparkle N°1 VOR 0324	1
H	Geyser N°1 VOR 0301	1

1
E-003

BONDING LAYOUT

1. REFER TO SPECS ON COVER PAGE
2. COORDINATE THIS DRAWING WITH ARCHITECTURAL, CIVIL, PLUMBING & ELECTRICAL.

BONDING WIRE - - - - - - - - - - - - - -

VORTEX

VORTEX USA Inc.
3500 South Dupont Highway, Suite EP-101
Dover, Delaware
United States 19901
Phone: +1 (877) 586-7839

COPYRIGHT VORTEX USA Inc-THIS DOCUMENT AND THE IDEAS, RENDERINGS AND OTHER CONTENTS CONTAINED THEREIN ARE THE SOLE PROPETY OF VORTEX USA Inc AND MAY NOT BE DISSEMINATED, COPIED, REPRODUCED OR OTHERWISE USED WITHOUT PRIOR WRITTEN CONSENT OF VORTEX USA Inc.

Hurld Park Splashpad

Project Location
Woburn, MA

Project Number
42368

Version
VC

Date	Revision Description	No.	By
05/Nov/2025	Issued for Approval	00	SN

Drawing Title
Bonding Layout

Drawn by	Verified by
SN	MAB
Scale	Date
1/2"=1'-0"	05/Nov/2025

Page #
E-003

SECTION 31 13 19 – INVASIVE PLANT REMOVAL (REVISED)

PART 1 GENERAL

1.1 SUMMARY

A. Section includes: The work associated with invasive species removal by means of mechanical and chemical control. Invasive and nuisance species work on site includes Japanese Knotweed, Asiatic Bittersweet, and any other understory invasive species (shrub, vine, forb, or grass), and trees under 2" caliper that are identified on the Massachusetts Prohibited Plant List, and are within the Limit of Work depicted on the Drawings, regardless of if it is identified on the drawings or not.

B. Any infested soil and/or plant material including plant leaves, stems, and roots within the Limit of Work is to be reused in place or removed and disposed of off-site. Under no circumstances is soil infested with invasive plant biomass, stems, and roots to be re-located elsewhere on the project site. Any removed infested soils will require transportation to an appropriate disposal facility.

C. Any soil infested with Japanese knotweed, including plant leaves, stems, and roots within the Limit of Work, is to be removed and disposed of off-site. Under no circumstances is soil infested with Japanese knotweed to be reused on site and will require transportation to an appropriate disposal facility.

D. Related Sections:
   1. Section 31 20 00 – Earth Moving
   2. Section 31 10 00 – Site Clearing
   3. Section 31 25 00 – Erosion and Sediment Control
   4. Section 32 91 19 – Landscape Grading
   5. Section 32 92 19 – Seeding
   6. Section 32 93 00 – Plants

E. Review and follow all items within the Woburn Conservation Commission Order of Conditions DEP# 348-867.

1.2 COORDINATION

A. Meeting: A meeting is to be held at the site prior to commencement of any site work to discuss invasive species control activities. The earthwork contractor, the invasive management specialist, the landscape contractor, and the landscape architect or environmental scientist must be present at this meeting.

B. Approach: The approach to invasive management is to be tied into the construction sequence, with three treatment occurrences and site monitoring. Times of treatment are given to align with site earth work and planting. Methods used for treatment are at the discretion of the contractor but must be approved. Coordinate with the Owner and Landscape Architect to confirm schedule and approaches prior to commencing work under this Section.

C. Approvals: The Work Plan and Schedule must be approved by the Woburn Conservation Commission (Commission) prior to any work beginning.

1.3 SUBMITTALS

A. Work Plan & Schedule: Schedule and management techniques to be used to treat invasive species within the limit of work during construction. Include dates, management techniques, and plan for soil stock piling / transport. Plan must be approved by Landscape Architect or Environmental Scientist before beginning. Plan must be approved by the Conservation Commission as outlined in the Order of Conditions.

B. Herbicide Product Data
   1. Provide the following information:
      a. Material properties – all herbicides must be for aquatic use
      b. Material Safety Data Sheet (MSDS)
   2. Supplier: Name, address, and phone number.
   3. Certification credentials of individual licensed to apply and/or oversee herbicide applications.

C. Manufacturer's Certificate: Certify products meet or exceed the specified requirements.

D. Disposal Facility: Name and address of the facility in which the weed infested soils are to be disposed, only if approved and necessary.

E. Contactor to provide written qualification data for firm and person(s) to be responsible for work to demonstrate their capabilities and experience as outlined in Qualification for invasives removal.

F. Contractor to provide current Massachusetts herbicide applicator certificate of person(s) to perform work where herbicides are to be used.

1.4 CLOSEOUT SUBMITTALS

A. Management Reports: Submit reports with images, descriptions and dates of work performed in compliance with the previously approved Work Plan and Schedule from Section 1.3.A

B. Maintenance: Submit recommended procedures for routine year-round management of invasives previously present on site to owner.
   1. Include strategies for management for both manual & chemical treatment.
   2. Include time of year and schedule for maintenance activities.

1.5 QUALIFICATIONS

A. The selected contractor must have at least one staff member on-site who is trained and certified in invasive plant identification. The contractor may, alternatively, provide a sub-contractor with the required expertise.

B. The selected contractor must have at least one staff member on-site who is trained and certified by the Commonwealth of Massachusetts in herbicide application. The contractor may, alternatively, provide a sub-contractor with the required expertise.

C. The contractor completing the work must have a certificate in invasive management or equivalent.

D. The selected contractor is to have a minimum of five years of documented experience with invasive management including application and use of herbicides.

1.6 DELIVERY, STORAGE AND HANDLING

A. Deliver, handle, and store materials in accordance with supplier's instructions.

B. Do not order or deliver materials until required certificates, product information, supplier information, and facility information has been reviewed and approved by the landscape architect.

PART 2 PRODUCTS

2.1 HERBICIDES FOR CHEMICAL CONTROL

A. All herbicides and chemicals must be for aquatic use.

B. Utilize herbicides for individual species as required.

C. Outline herbicides proposed and percentages / mixtures in Work Plan and Schedule.

PART 3 EXECUTION

3.1 TREATMENT AREA

A. Invasive and nuisance species work on site includes Japanese Knotweed, Asiatic bittersweet, and any understory invasive species (shrub, vine, forb, or grass), and trees under 2” caliper that are identified on the Massachusetts Prohibited Plant List and are within the Limit of Work depicted on the Drawings, regardless of if species is identified on the drawings.

3.2 EXAMINATION

A. Inspect all areas within the Limit of Work. Identify all invasives present and flag large stands of invasive plants.

3.3 PREPARATION

A. A combination invasive species management approach, including mechanical (cutting) and chemical (herbicide) treatment, can be utilized. Verify that soil management and plant treatment techniques are coordinated with site work.

B. Flag all areas where soil should not be reused due to the presence of invasive plants, and specifically where soils are infested with Japanese knotweed. Maintain flags throughout duration of site work.

3.4 INFESTED SOIL STOCKPILE

A. Any infested soil and/or plant material including plant leaves, stems and roots, within the Limit of Work may be re-used in-place or else must be removed and disposed of off-site. Under no circumstances is soil infested with invasive plant biomass, stems, and roots to be re-used in any adjacent areas on the project site. Transportation to an appropriate disposal facility is required for any infested soils removed from the site.

B. Any soil infested with Japanese knotweed, including plant leaves, stems, and roots within the Limit of Work is to be removed and disposed of off-site. Under no circumstances is soil infested with Japanese knotweed to be reused on site and will these infested soils require transportation to an appropriate disposal facility.

C. Establish infested soil stockpile area during erosion controls and site clearing. Under no circumstances is removed biomass of invasive species to be stockpiled on site in undesignated areas. Coordinate with the Landscape Architect and/or Engineer if additional stockpiles are required.

D. Transport soil and invasive material to approved disposal site.

E. If there is a delay in transport or soil, surround the infested soil stockpile area with silt fence and straw bales as required to prevent overland flow from washing into or out of the area. Cover the infested soil stockpile area with black plastic or a tarp to minimize sun exposure to the invasive vegetation biomass.

3.5 INVASIVES MANAGEMENT SEQUENCE

A. FIRST TREATMENT

1. The first treatment is to occur at least two weeks prior to earth work activities in the areas where invasive species have been identified. If applicable based on species and time of year, herbicide is to be applied with a glove or by injection.
2. Treatment Acceptance:
    a. After treatment submit in writing the treatment performed with dates and imags to the Landscape Architect.
    b. The first treatment will be approved when all invasive vegetation has started to die or has been removed from the site. Additional applications or removal may be required. All invasive plant material must be removed from site prior to earth work.

B. SECOND TREATMENT

1. The second treatment must occur after final grades have been set, and before seeding and planting perennials and shrubs. Final grades are to be given at least three weeks to monitor if any invasive plants start to sprout before treatment. Contact the Landscape Architect to review the site prior to treatment. All regrowth from invasive species is to be removed mechanically if small in size or treated with herbicide. Any seeded areas damaged during treatment are to be replaced and amended.
2. Treatment Acceptance:
    a. After treatment, submit in writing the treatment performed with dates and images to the Landscape Architect.
    b. The treatment will be approved when all invasive plants within the treatment zone show signs of mortality, and no regrowth is visible one month after application. Follow-up applications may be required at no additional cost to the Owner if the initial application(s) are found to be only partially effective.

C. REVEGETATION

1. Plant and/or seed all areas as indicated on the Drawings ONLY following confirmation of no regrowth of invasive plants. Individual shoots that sprout amongst replanted vegetation shall be controlled by hand pulling, injection and/or “weed glove” methods only.

D. THIRD TREATMENT

1. The third treatment to occur one month after plants have been planted and site is starting to establish. Visit the site and review if invasive species are starting to emerge. If any are present, remove mechanically or spot treat as outlined in approved work plan. Any plants or seeded areas damaged during treatment are to be replaced. Individual shoots that sprout amongst replanted vegetation shall be controlled by hand pulling, injection and/or “weed glove” methods only.
2. Final Acceptance:
    a. After treatment, submit in writing the treatment performed with dates and images to the Landscape Architect.
    b. Contractor, Landscape Architect and Owner to convene on site one month after third treatment to review.
    c. The treatment will be approved and completed when all invasive plants within the treatment zone one month after application show signs of mortality and no regrowth is visible. Follow-up applications may be required at no additional cost to the Owner if the initial application(s) are found to be only partially effective.

E. MONITORING

1. Monitor all areas within the Limit of Work throughout construction for the appearance of invasive species. If any are present within the limit of work remove as appropriate based on species.

END OF SECTION

PROPERTY OF EARTHSCAPE PLAY INC. - DO NOT COPY. DO NOT DISTRIBUTE.

INSTALLATION INSTRUCTIONS

EARTHSCAPE COLLECTIONS

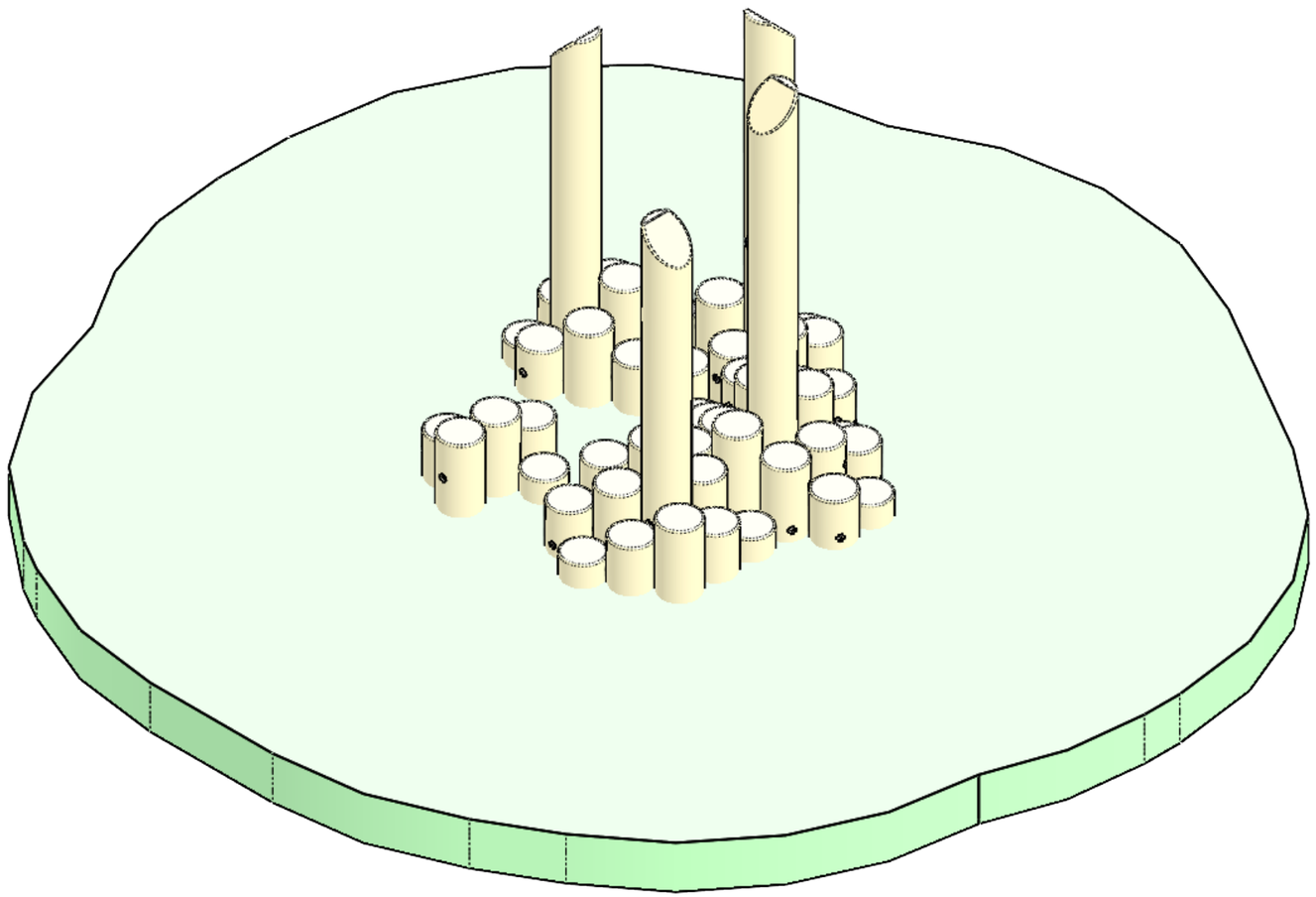

STEPPER CLUSTER M4

THESE INSTRUCTIONS APPLY TO THE FOLLOWING VERSIONS OF THIS PRODUCT:

F00496 - STEPPER CLUSTER M4
(CONCRETE FOUNDATION INSTALL)

NOTE: COLOURS SHOWN ARE REPRESENTATIONAL AND MAY NOT BE THE SAME AS THOSE OF THE SUPPLIED PRODUCT

DATE DOCUMENT RELEASED 2024-09-09
DOCUMENT NUMBER: 1063639-R2

PROPERTY OF EARTHSCAPE PLAY INC. - DO NOT COPY. DO NOT DISTRIBUTE.

SPECIFICATIONS

INTENDED USER AGE GROUP: 18m to 5y
MAXIMUM HEIGHT OF STRUCTURE: 2.74m
MAXIMUM DESIGNATED FALL HEIGHT: 0.60 m
AREA OF SURFACING: 34.9 m²
WEIGHT: 2222 kg

RECOMMENDED INSTALLATION BUFFER

Play equipment requires a variety of offsets to other elements in a playground. The plan view on this page shows the minimum recommended area needed for installing this piece of play equipment by itself. Combining this play equipment with other pieces should be reviewed by a person with a Certified Playground Safety Inspector training.
The offset shown here includes a buffer beyond the CSA requirements to account for fabrication and material variation.

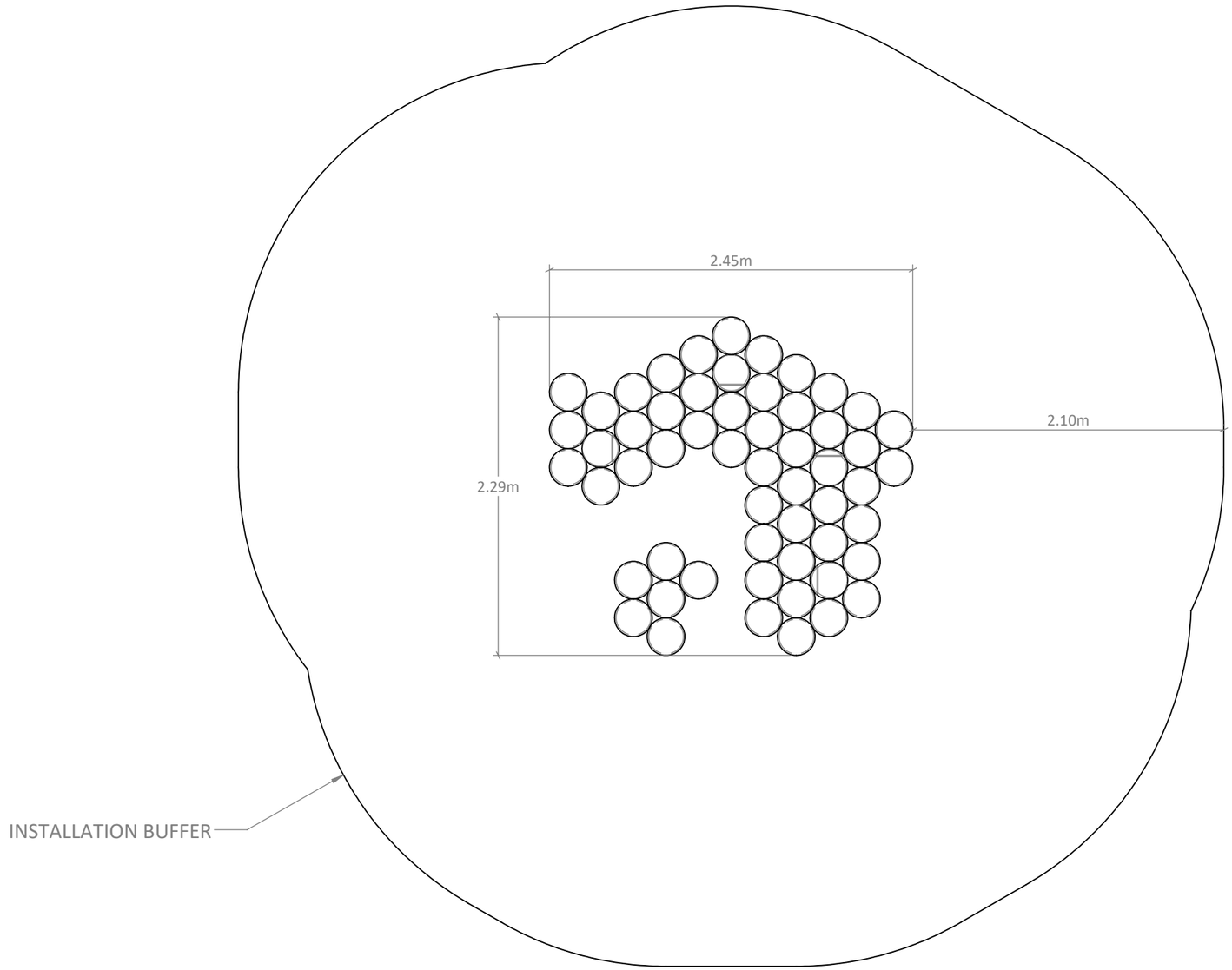

PROPERTY OF EARTHSCAPE PLAY INC. - DO NOT COPY. DO NOT DISTRIBUTE.

ASTM SPECIFICATIONS (FOR INSTALLATIONS AT U.S. SITES ONLY)

STEPPER CLUSTER M4

SPECIFICATIONS

INTENDED USER AGE GROUP: 2 to 5y
MAXIMUM HEIGHT OF STRUCTURE: 9'-0"
MAXIMUM DESIGNATED FALL HEIGHT: 2'-0"
AREA OF SURFACING: 376 ft²
WEIGHT: 4900 lb

RECOMMENDED INSTALLATION BUFFER

Play equipment requires a variety of offsets to other elements in a playground. The plan view on this page shows the minimum recommended area needed for installing this piece of play equipment by itself. Combining this play equipment with other pieces should be reviewed by a person with a Certified Playground Safety Inspector training.
The offset shown here includes a buffer beyond the ASTM requirements to account for fabrication and material variation.

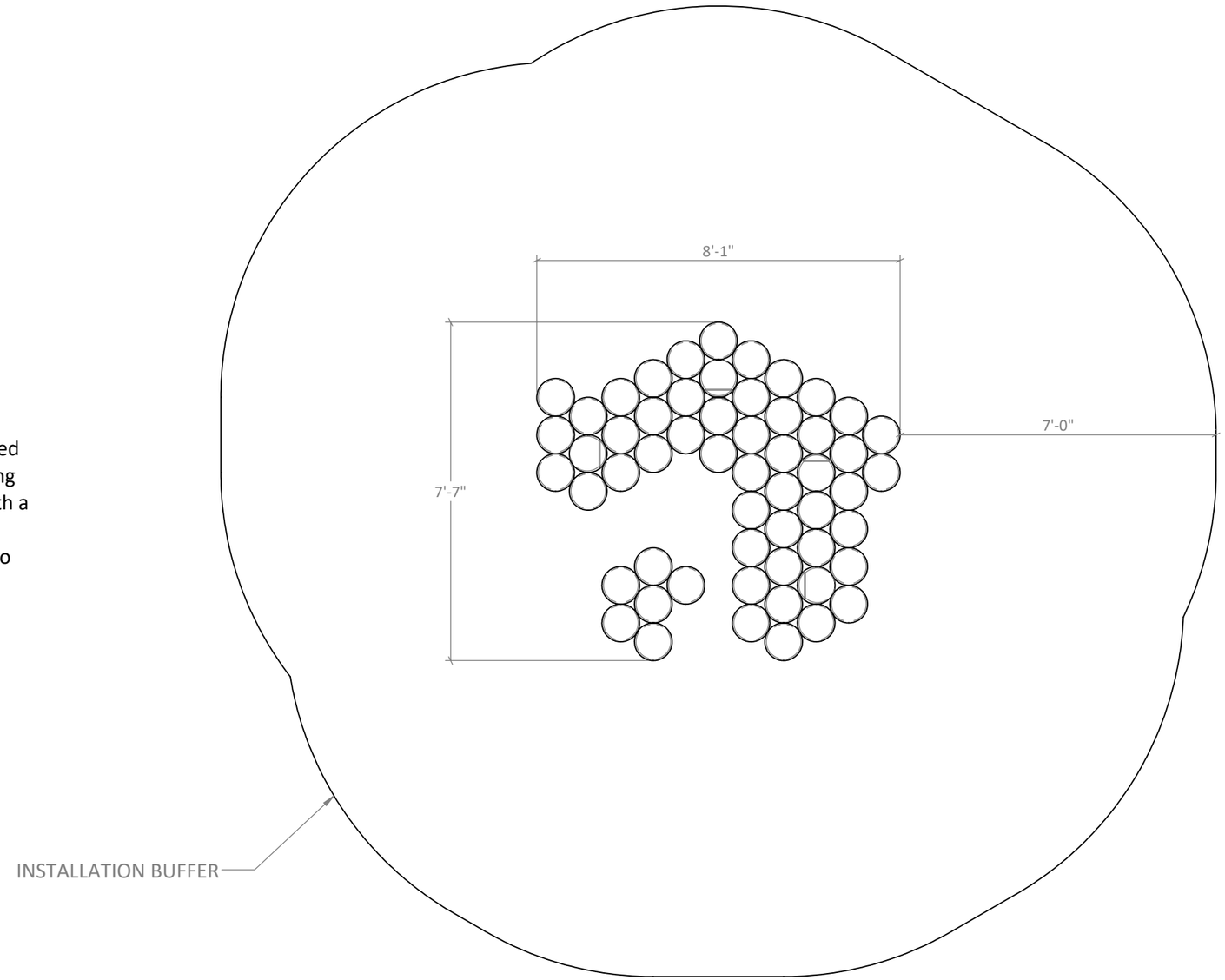

PROPERTY OF EARTHSCAPE PLAY INC. - DO NOT COPY. DO NOT DISTRIBUTE.

PLEASE READ ALL INSTRUCTIONS

Before starting to install this equipment be sure to read through and understand these instructions.
If you have any questions, contact your local dealer for assistance before proceeding.

MEASUREMENTS AND STANDARDS

Measurements have been provided in both metres and [feet-inches]. Ensure to follow standards noted for the location in which this play equipment is being installed. Those marked CSA are to be used in Canada and those marked ASTM to be used in the United States.

LIST OF ABBREVIATIONS

AYC = Alaskan Yellow Cedar
WRC = Western Red Cedar
DPS = Designated Play Surface
SS = Stainless Steel
HDG = Hot Dipped Galvanized
WWM = Welded Wire Mesh
TYP = Typical
C/W = Complete With
UNO = Unless Noted Otherwise
EWF = Engineered Wood Fiber
PIP = Poured-In-Place Rubber Surfacing
PT = Pressure Treated

TOOLS SUPPLIED WITH THIS PRODUCT

No Tools Supplied.

TOOLS THE INSTALLER NEEDS TO SUPPLY

High torque drill
Hammer drill
1/2" impact driver
Set of wood drill bits - up to 1/2"
Set of impact sockets - up to 1"
1/2" ratcheting socket wrench
T25 drive bit
T40 drive bit
Concrete drill bit, 1/2" x 8"
Angle grinder (with course 24 grit sanding disks and metal cut off disks)
Transit or Laser Level
Carpenter's Square
Rigging and lifting straps

EQUIPMENT THE INSTALLER NEEDS TO SUPPLY

Machine to lift and position heaviest element.
Stepper Cluster M4 - Trunk I +/-1030 kg [2275 lbs]

INSTALLER CREW AND TIME REQUIRED

Number of people needed: 2
Typical total person-hours to install: 16 + concrete cure time
Time breakdown:

- 4 hours x 2 people for excavation and pouring concrete
- Time for concrete cure
- 2 hours x 2 people for onsite fabrication and play equipment installation

MATERIALS THE INSTALLER NEEDS TO SUPPLY

Installer to supply materials for preparation, pour and cure of concrete. See Sheets 9 and 10.

WARNINGS

These instructions do not provide specific guidance on the use of tools or the lifting and moving heavy objects. It is assumed that competent people are installing this product who are familiar with using the tools and equipment required and are knowledgeable and skilled at lifting and positioning heavy objects.

PROPERTY OF EARTHSCAPE PLAY INC. - DO NOT COPY. DO NOT DISTRIBUTE.

MAKE SURE YOU HAVE ALL THE PARTS

Examine the equipment and ensure you have all the required parts listed in the table below.

See "As Shipped" Sheet to understand orientation of product as delivered to site.

ITEM NO.	PARTNO	DESCRIPTION	QTY.
1		STEPPER CLUSTER M4 - TRUNK I	1
2		STEPPER CLUSTER M4 - TRUNK II	1
3		STEPPER CLUSTER M4 - TRUNK III	1
4	B00060	6 X 6 DOCK BRACKET V2	10
5	H16685	WOOD SCREW, WASHER HEAD, M8X100, SS	40
6	H60020	TITEN HD 1/2" X 5" CONCRETE SCREW	20

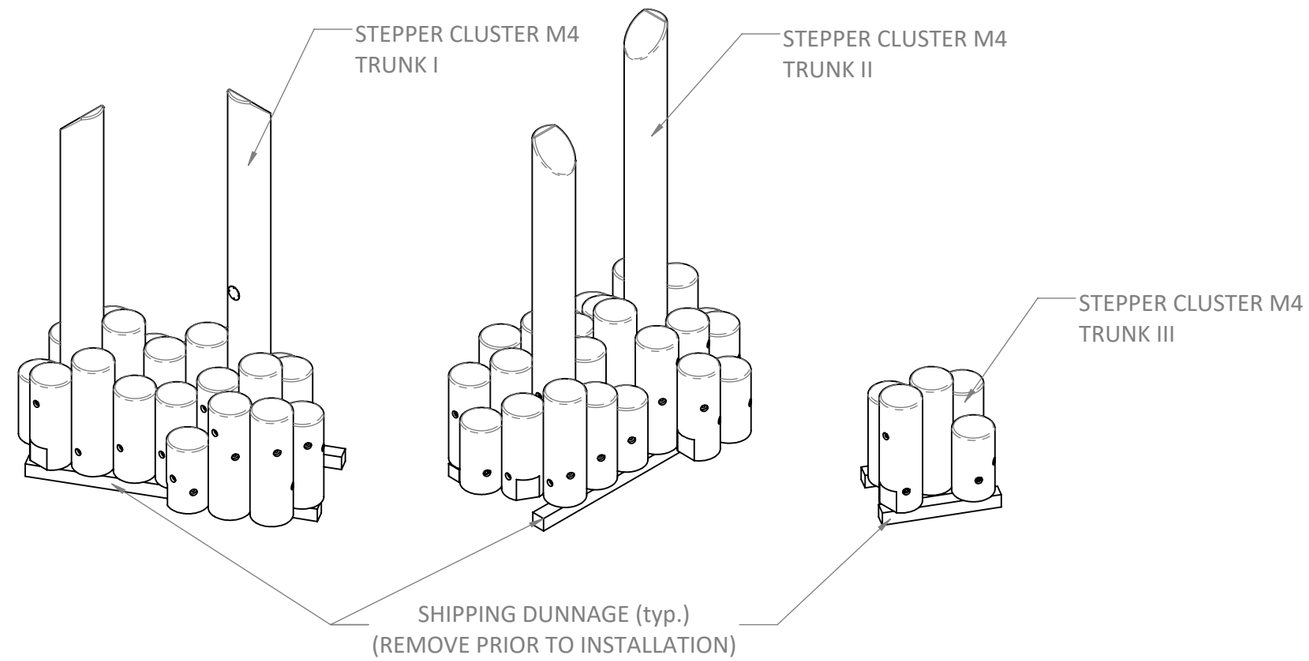

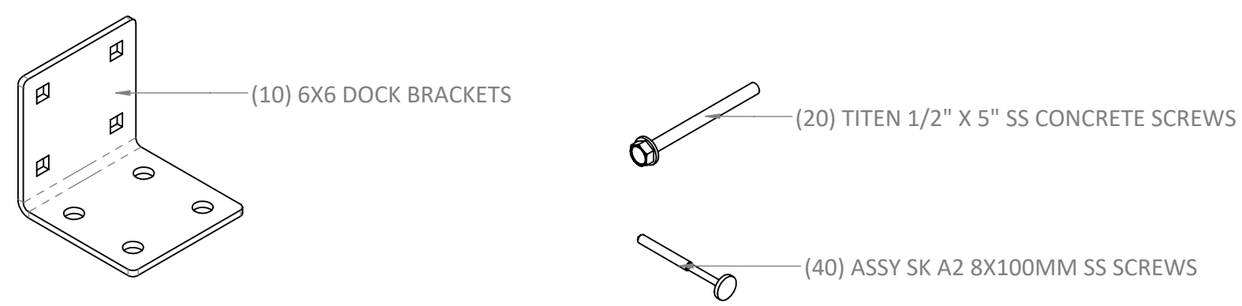

PROPERTY OF EARTHSCAPE PLAY INC. - DO NOT COPY. DO NOT DISTRIBUTE.

AS SHIPPED

STEPPER CLUSTER M4

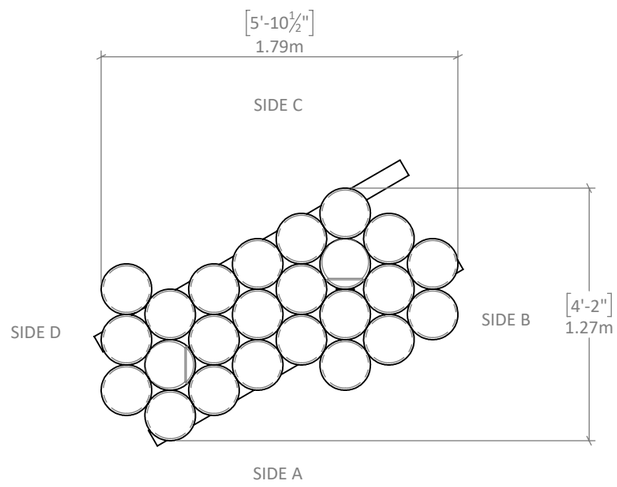

PLAN VIEW

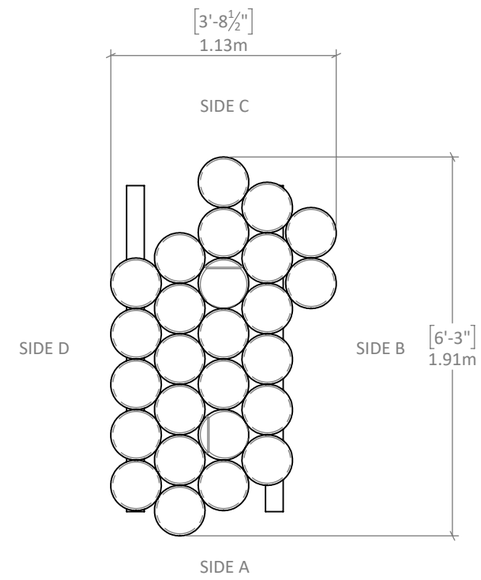

PLAN VIEW

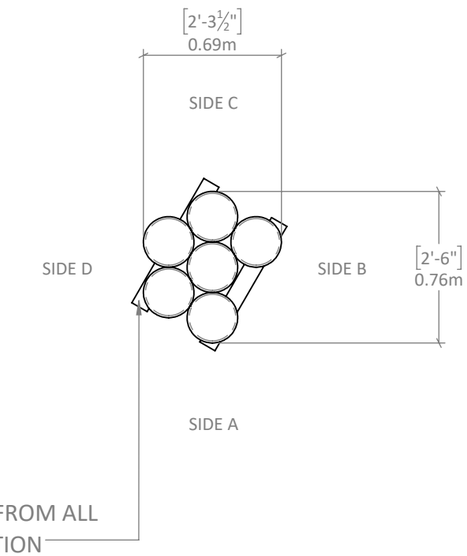

DUNNAGE TO BE REMOVED FROM ALL TRUNKS PRIOR TO INSTALLATION

PLAN VIEW

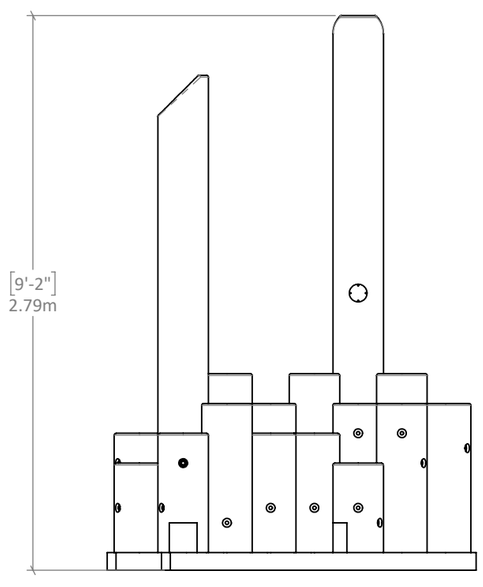

SIDE A

TRUNK I

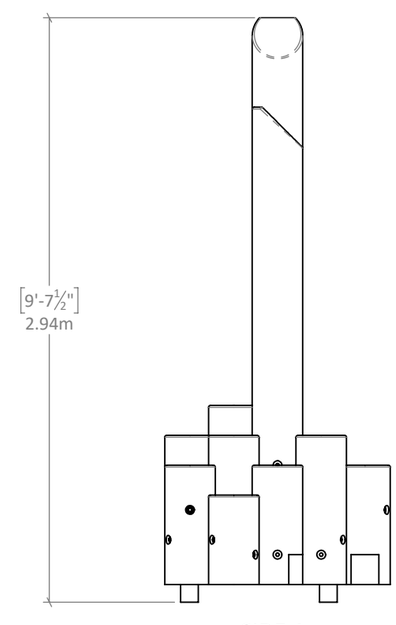

SIDE A

TRUNK II

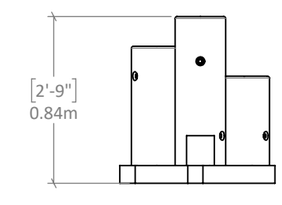

SIDE A

TRUNK III

PROPERTY OF EARTHSCAPE PLAY INC. - DO NOT COPY. DO NOT DISTRIBUTE.

HOW THE PIECES COME TOGETHER

The three pre-assembled Trunks of Stepper Cluster M4 are designed to fit with each other to form the overall finished assembly.
Trunks I and II will sit tightly together to create the majority of the assembly, while Trunk III will remain separate.

See Sheet 12 for assembly order and details.

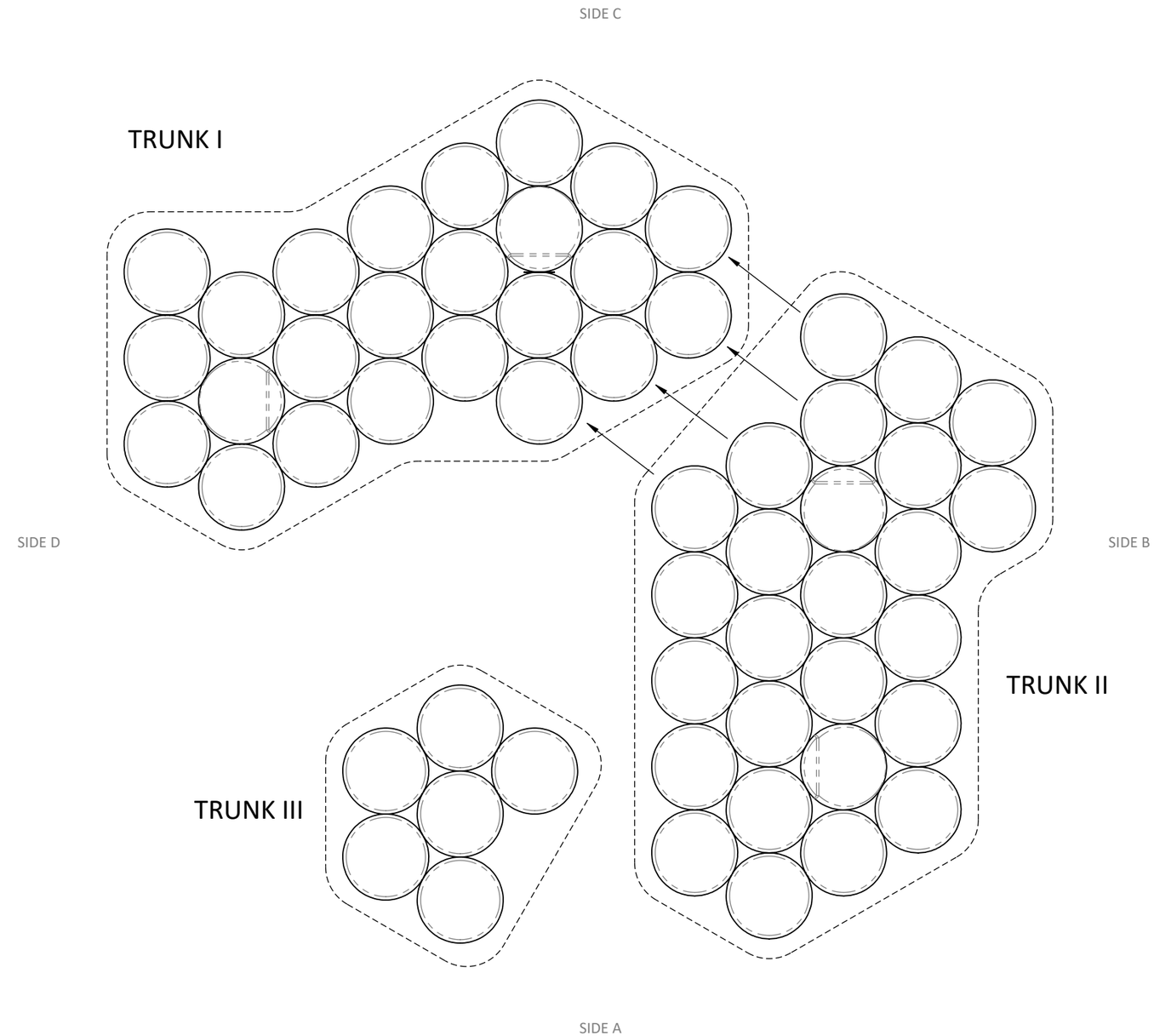

PROPERTY OF EARTHSCAPE PLAY INC. - DO NOT COPY. DO NOT DISTRIBUTE.

WHAT THE FINISHED PRODUCT LOOKS LIKE

Review the overall site layout (by others) to understand the locations and orietnation of the Stepper CLuster M4. The location of the Stepper CLuster M4 in relation to other site elements is not within the scope of these instructions and should be provided by others.

P01 is a poured-in-place concrete pad used to support and anchor Stepper Cluster M4. The concrete pad is to be provided by the installer if a suitable pad is not already provided.

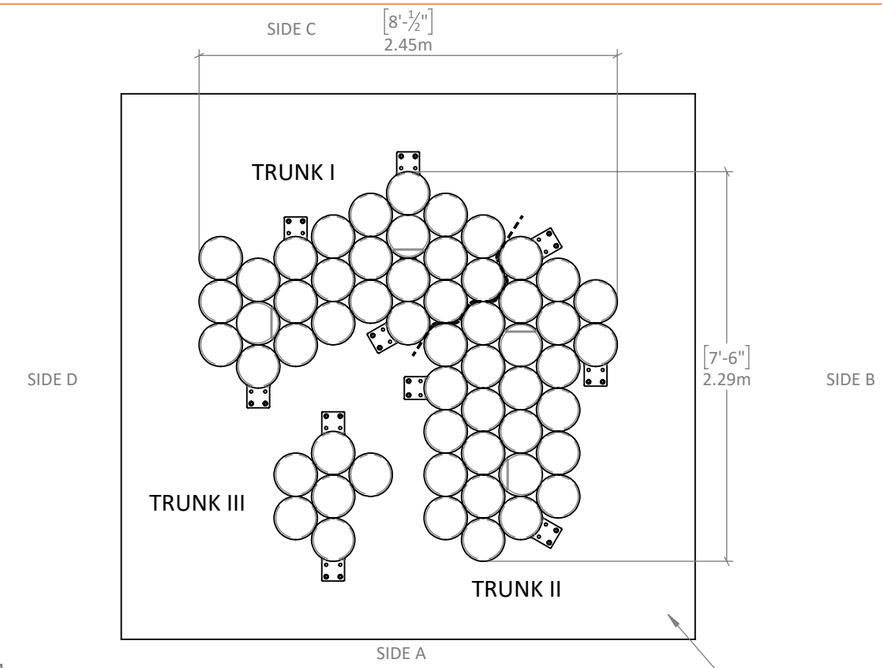

PLAN VIEW

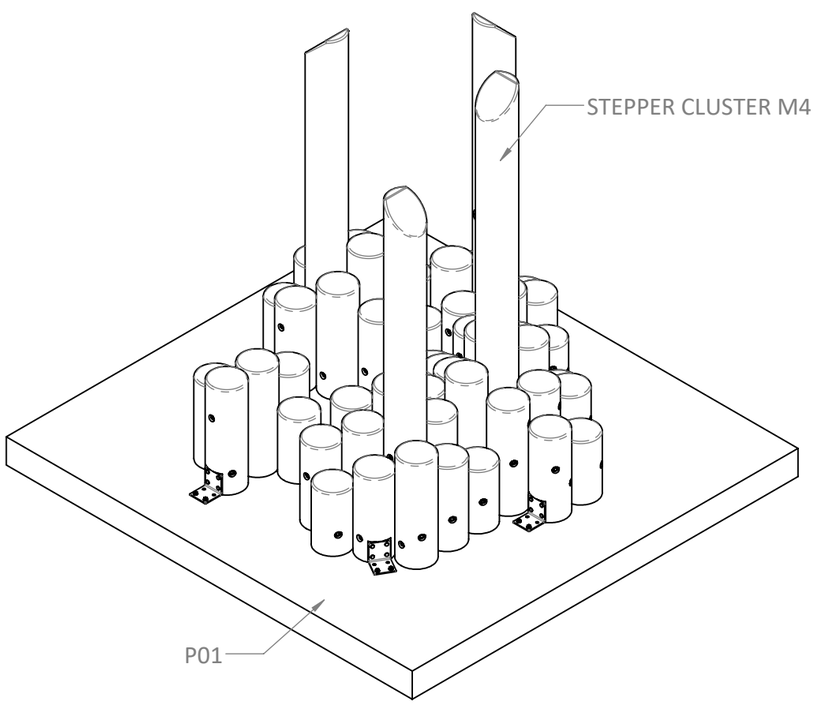

ISOMETRIC VIEW

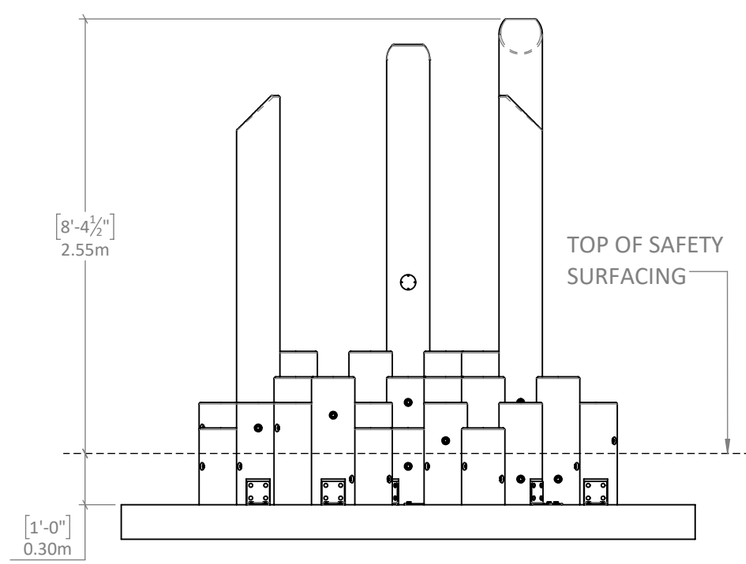

SIDE A

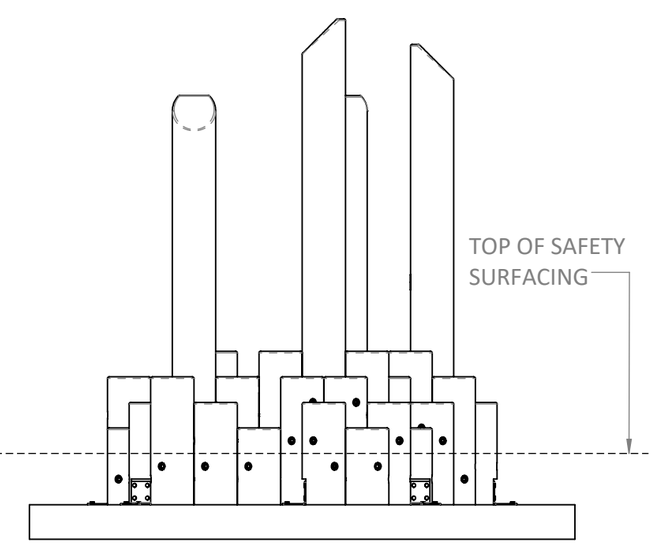

SIDE B

PROPERTY OF EARTHSCAPE PLAY INC. - DO NOT COPY. DO NOT DISTRIBUTE.

LOCATE PLAY EQUIPMENT

STEP 1 - LOCATING THE EQUIPMENT ON SITE

Lay out and mark the location of the the Stepper Cluster M4 Reference Points #1 & #2 on your site. The location of reference points relative to the site is not within the scope of these instructions and should be provided by others.

Reference Point #3 will be used only for final placement and anchoring of Trunk III and is provided here only for reference. See Sheet 12.

Ensure you know what the designed elevation is for the finished safety surface. All heights provided in these instructions will be relative to the finished safety surface. The finished surface elevation is not within the scope of these instructions and should be provided by others.

Ensure sufficient space is provided around Stepper Cluster M4 to maintain installation buffer as detailed in CSA or ASTM Specifications (sheet 2 & 3, as relevant to install location) when installed as a standalone unit.
Refer to project site plan when installed as a part of larger playground.

STEP 2 - LAYOUT CONCRETE PAD

Lay out and mark the outer edge of the concrete pad based off the dimensions provided in the Footing Plan View.

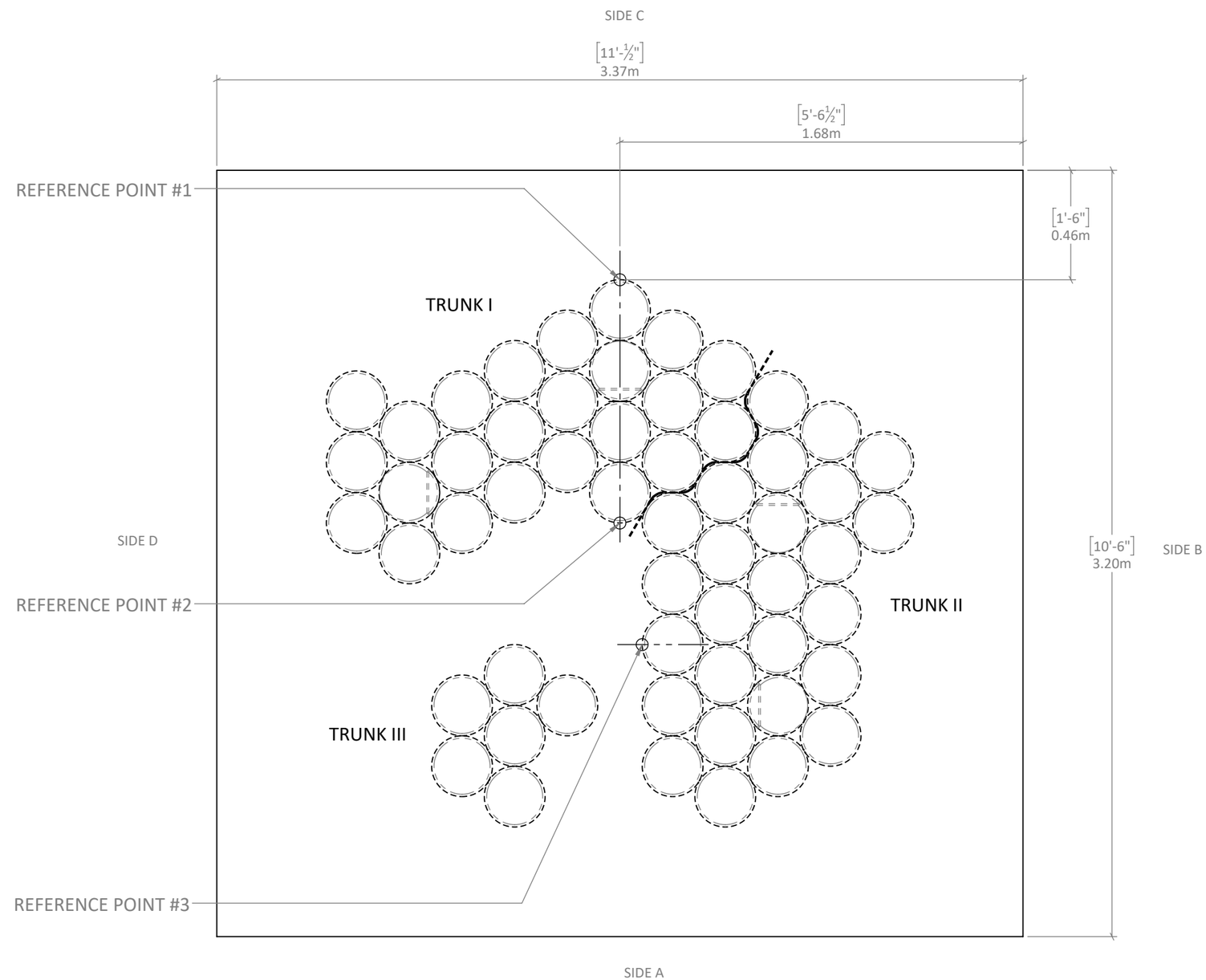

FOOTING PLAN VIEW

PROPERTY OF EARTHSCAPE PLAY INC. - DO NOT COPY. DO NOT DISTRIBUTE.

STEP 3 - EXCAVATE FOR CONCRETE PAD

Excavate area and prepare as per Concrete Placement Detail SD-001D on this sheet.

The foundation detail provided in these instructions has been developed assuming typical soil conditions specified in General Notes. If the subgrade encountered does not meet these conditions, the subgrade must be improved or revisions made to this detail. Revisions to the detail are the responsibility of the installer and it is strongly recommended any changes be reviewed and approved by a licensed professional engineer.

FOUNDATION NOTES:

1. SEE "GENERAL NOTES" SHEET FOR GENERAL NOTES.
2. TOP OF CONCRETE TO BE SET AT 300mm [12"] BELOW TOP OF SURFACING UNO.
3. SLAB TO BEAR ON MATERIAL BELOW THE FROST DEPTH, OR ALTERNATIVELY ON 300mm [12"] OF FREE DRAINING AGGREGATE, COMPACTED TO 98% SPDD.
4. CROSS SECTION ONLY. SEE PROJECT DRAWINGS FOR FOUNDATION SIZE, LAYOUT AND ADDITIONAL REBAR.

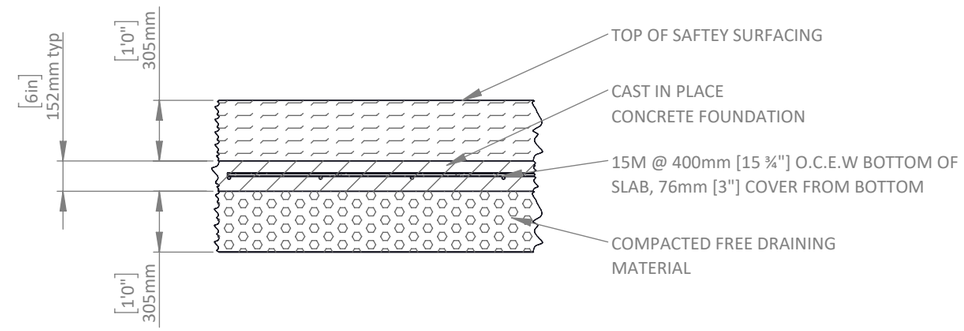

CONCRETE FOUNDATION DETAIL SD-001D

STEP 4 - POUR CONCRETE PAD

Pour concrete pad as per Concrete Placement Detail SD-001D on this sheet.
Ensure top of concrete is 300mm [12"] below finished safety surface.
Allow concrete to cure prior to proceeding to Step 5.

PROPERTY OF EARTHSCAPE PLAY INC. - DO NOT COPY. DO NOT DISTRIBUTE.

INSTALL DOCK BRACKETS

STEP 5 - INSTALL DOCK BRACKETS

Refer to Plan View drawing on this page for install positions of the Dock Brackets. Note the orientation and identify logs to receive Dock Brackets.

Identify the flat face cut into the base of indicated logs and install dock brackets such that the vertical of the dock bracket sits flush against it, with no portion protruding out from the uncut face of the log. The horizontal of the dock bracket should sit flush with the base of the Stepper Cluster L5 extending away from the log. See Detail A.

Fasten each dock bracket to the log using (4) Assy SK A2 8x100mm SS screws.

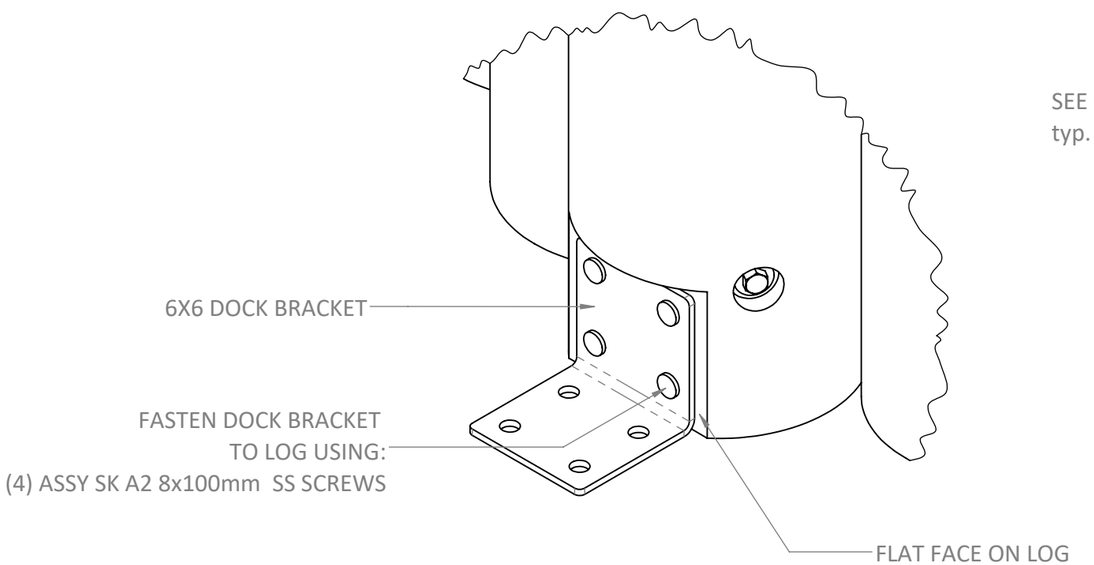

DETAIL A

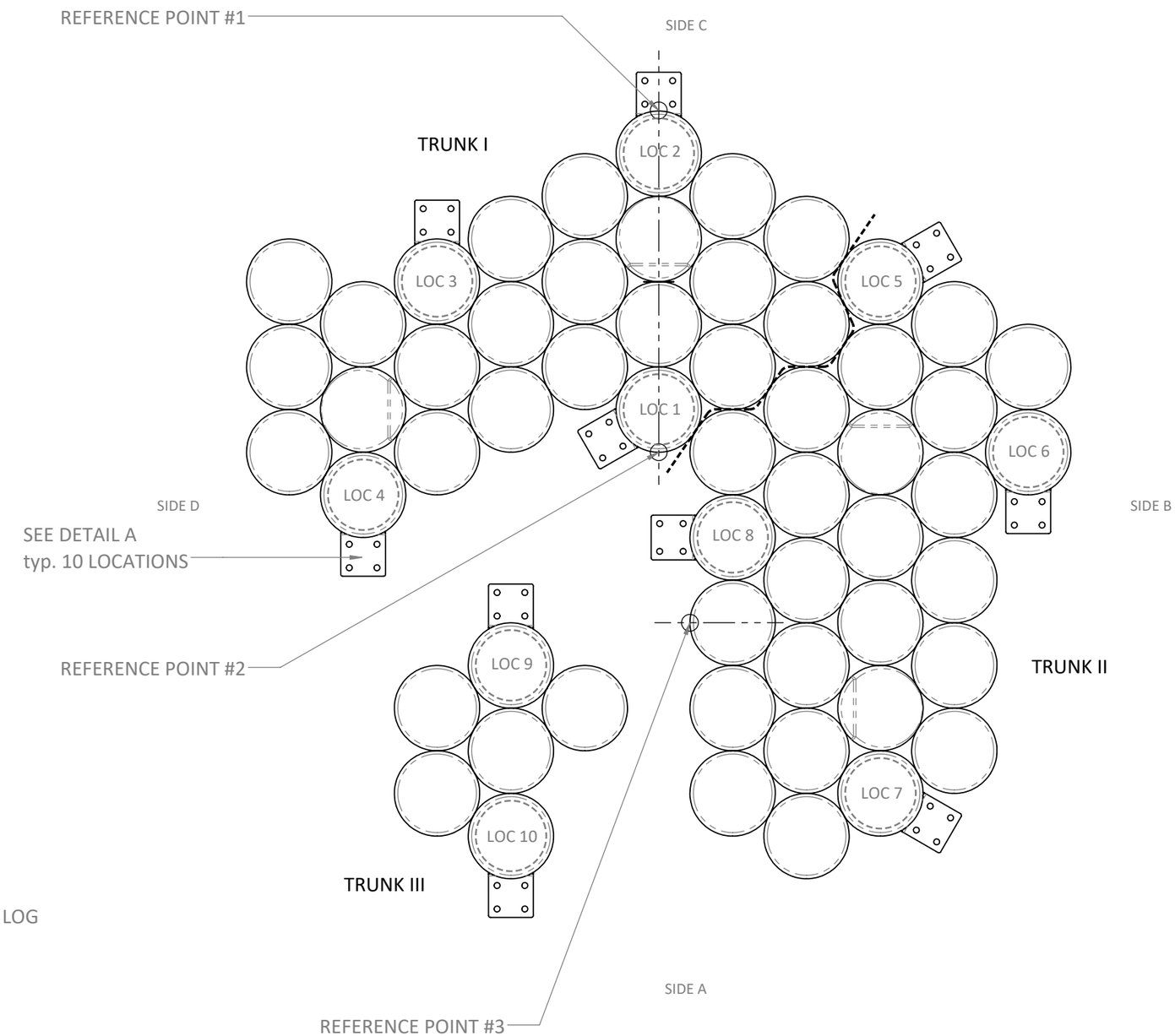

PLAN VIEW

PROPERTY OF EARTHSCAPE PLAY INC. - DO NOT COPY. DO NOT DISTRIBUTE.

SECURE STEPPER CLUSTER ON PAD

STEP 6 - SECURE STEPPER CLUSTER TO CONCRETE PAD

Ensure shipping dunnage has been removed from all Trunks.

Position the three Trunks of Stepper Cluster M4 on concrete pad P01 as per plan view on this sheet, using Reference Points marked on Stepper Cluster M4 and on site. Ensure Trunks I and II are as tightly aligned as possible.

Anchor the Dock Brackets to the concrete pad as per Detail B on this sheet. Total of 10 locations.

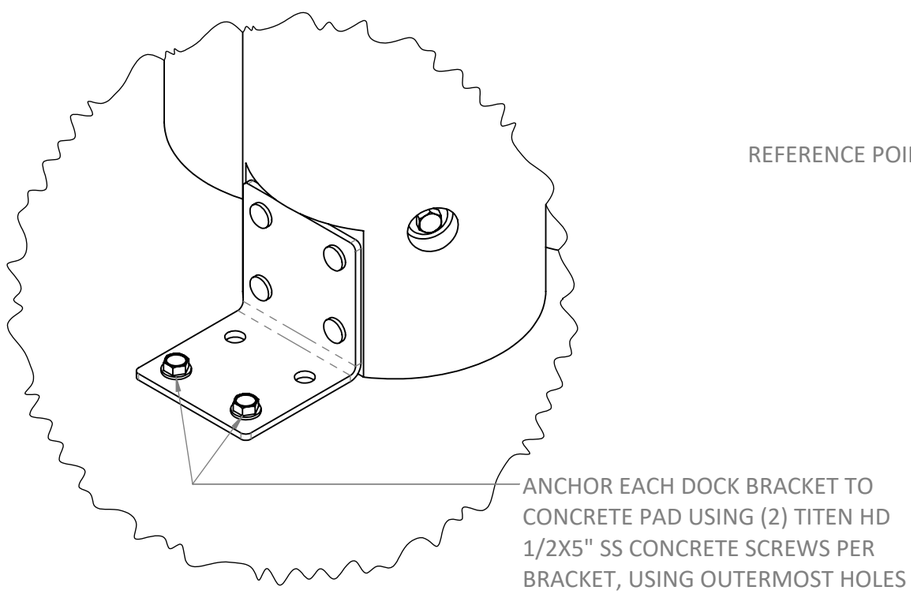

DETAIL B

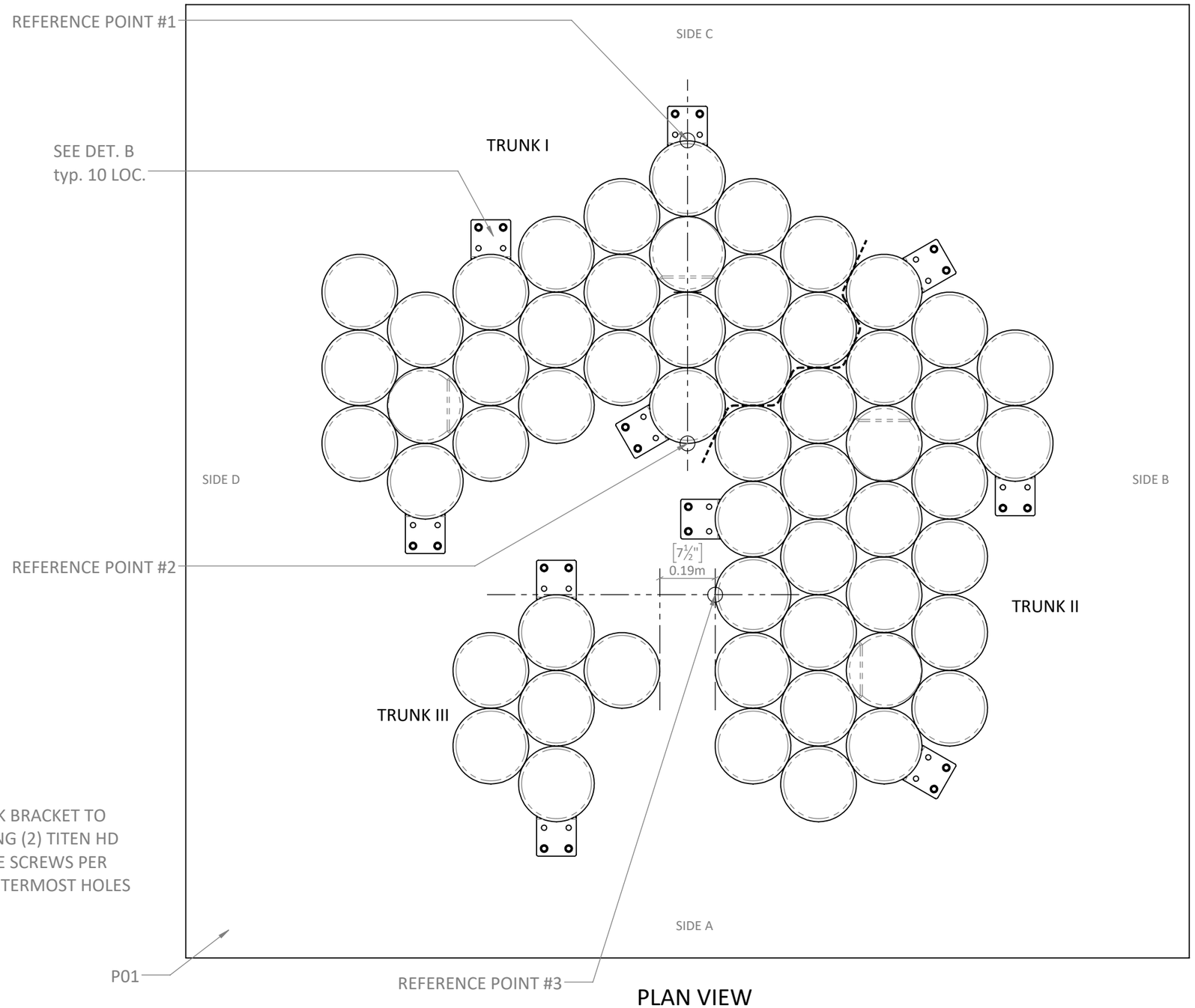

PLAN VIEW

PROPERTY OF EARTHSCAPE PLAY INC. - DO NOT COPY. DO NOT DISTRIBUTE.

GENERAL NOTES

STEPPER CLUSTER M4

FOR CANADIAN INSTALLATION SITES USE THESE NOTES

GENERAL NOTES

1. THIS DRAWING IS THE PROPERTY OF EARTHSCAPE. DO NOT COPY OR DISTRIBUTE WITHOUT PERMISSION.
2. EARTHSCAPE RESERVES OWNERSHIP OF ALL DRAWINGS, SPECIFICATIONS, AND OTHER DOCUMENTS, INCLUDING THOSE IN ELECTRONIC FORM, AUTHORED BY EARTHSCAPE. UPON SIGNING CONTRACT, EARTHSCAPE GRANTS THE OWNER LIMITED LICENSE TO USE THE INSTRUMENTS OF SERVICE SOLELY FOR USING AND MAINTAINING, OR ADDING TO THE PROJECT
3. ENGINEERING AND STRUCTURAL REVIEW: EARTHSCAPE PROVIDES STAMPED DRAWINGS AND/OR STRUCTURAL LOAD TESTING FOR ONTARIO, AS REQUIRED BY CSA Z614. LOCAL ENGINEERING APPROVAL FOR JURISDICTIONS OUTSIDE ONTARIO, IF REQUIRED, TO BE PROVIDED BY OTHERS.
4. EARTHSCAPE DESIGNS AND ENGINEERS FOR A FROST PENETRATION DEPTH OF 1200mm. SLAB ON GRADE CONSTRUCTION IS SUBJECT TO FROST MOVEMENTS. FREE DRAINING SOIL UNDER THE FOOTING IS USED TO MINIMIZE FROST EFFECTS. OVERALL TOWER/SLAB MOVEMENT MAY OCCUR.
5. INSPECTION AND TESTING: INSPECTION, TESTING (INCLUDING CONCRETE TESTING), PRE-CONSTRUCTION SURVEYS TO BE COMPLETED BY OTHERS.
6. SURFACING: WHEN AN IMPACT-ABSORBING SURFACE MATERIAL IS REQUIRED, IT MUST COMPLY WITH CSA Z614 (MOST RECENT EDITION) FOR THE DEFINED FALL HEIGHT OF THE EQUIPMENT SPECIFIED IN DRAWINGS BY EARTHSCAPE OR A CONTRACTUALLY OBLIGATED CRITICAL HEIGHT SPECIFIED IN ADVANCE. ENSURE USE ZONES, SAFETY ZONES, AND/OR PROTECTIVE SURFACING ZONES AROUND ALL PLAY EQUIPMENT ARE COMPLIANT WITH CSA Z614 (MOST RECENT EDITION) - BY OTHERS.
7. SURVEY AND FACILITIES: SURVEY WORK INCLUDING BENCHMARKS, LINES AND LEVELS, PRE-CONSTRUCTION SURVEY, AS-BUILT DRAWINGS BY OTHERS
8. THESE DRAWINGS ARE INTENDED TO BE PRINTED AT 11" X 17" PAGE SIZE. DO NOT SCALE
9. ALL MEASUREMENTS ARE IN METRES (m) UNLESS OTHERWISE STATED
10. EQUIPMENT SHALL COMPLY WITH THE REQUIREMENTS OF CAN/CSA-Z614 (MOST RECENT EDITION) "CHILDREN'S PLAYSPACES AND EQUIPMENT"
11. VISUAL DETAILS INCLUDING BUT NOT LIMITED TO: NET SPACING, ROPE APPEARANCE AND COLOURS ARE FOR CONCEPTUAL PURPOSES ONLY
12. ALWAYS WEAR PROPER PPE AND FOLLOW SAFE PRACTICES.
13. ALL WORK SHALL BE COMPLETED IN ACCORDANCE WITH THE OCCUPATIONAL HEALTH AND SAFETY ACT.
14. CONTRACTOR IS RESPONSIBLE FOR CONFIRMING ALL SITE CONDITIONS AND REPORTING DISCREPENCIES TO EARTHSCAPE IMMEDIATELY.
15. EARTHSCAPE IS NOT RESPONSIBLE FOR THIRD PARTY USE OF THESE DRAWINGS

FASTENERS:

1. METRIC/IMPERIAL DIAMETER CONVERSIONS OF TYPICAL SIZES:
    1. 8mm=5/16", 10mm=3/8", 12mm=1/2", 25mm=1"
    2. ROUND UP TO NEAREST STANDARD LENGTH FOR MANUFACTURER
2. ALL FASTENERS ARE TO BE STAINLESS STEEL (UNLESS OTHERWISE NOTED)
3. ALL BOLT HOLES SHALL BE PRE-DRILLED AND SHALL BE NOT LESS THAN 1mm AND NOT GREATER THAN 2mm LARGER THAN THE NOMINAL HOLE DIAMETER
4. FOR PARTIALLY THREADED SCREWS, EMBED FULL THREAD INTO SECONDARY MEMBER OR TO A DEPTH AS SPECIFIED ON DRAWINGS.
5. WHERE PRE-DRILLING OF SCREWS IS RECOMMENDED BY THE SCREW MANUFACTURER, HOLE DIAMETER TO BE STRICTLY AS PER MANUFACTURER'S INSTRUCTIONS.
6. DO NOT USE IMPACT DRILLS FOR SCREW INSTALLATION.
7. DO NOT USE A HAMMER TO ENGAGE THE FASTENER WITH THE WOOD.
8. ALL FASTENERS TO BE INSTALLED AS POSITIONED ON DRAWINGS.
9. ALL BOLTED CONNECTIONS ARE TO BE SECURED USING VIBRA-TITE "VC-3" THREAD-LOCKING FLUID OR EQUIVILENT

EXCAVATION AND BACKFILL

1. STRIP ALL TOP SOIL, PAVING, AND DELETERIOUS MATERIAL FROM UNDER FOOTINGS.
2. LOCATE ALL SERVICES PRIOR TO COMPLETING EXCAVATION.
3. ALL FOOTINGS SHALL BE PLACED AT A MINIMUM OF 1200mm BELOW GRADE UNLESS OTHERWISE NOTED ON THE DRAWINGS.
4. SUPPORTING SUBGRADE AND FILL TO HAVE A MINIMUM BEARING CAPACITY OF 150 kPa.
5. ALL FOOTINGS AND SLABS TO BE PLACED ON EITHER NATIVE GRAVEL/SAND/CLAY OR 150mm OF GRANULAR A COMPACTED TO A MINIMUM STANDARD PROCTOR DRY DENSITY OF 98%.
6. BENEATH 150mm TOP LAYER OF COMPACTED GRANULAR A, GRANULAR B FILL CAN BE USED AS REQUIRED PLACED IN MAXIMUM 200mm LIFTS, COMPACTED TO A STANDARD PROCTOR DRY DENSITY OF 96%.
7. CONTRACTOR IS RESPONSIBLE FOR SUPPORT OF EXCAVATIONS DURING CONSTRUCTION AS REQUIRED.

CONCRETE

1. ALL CONCRETE WORK AND MATERIALS SHALL BE IN ACCORDANCE WITH CAN/CSA A23.1/2
2. ALL REINFORCING STEEL TO BE IN ACCORDANCE WITH CAN/CSA A23.1/2 INCLUDING FABRICATION, DETAILING, LAP SPLICES, PLACEMENT, FIXING AND COVER.
3. REINFORCING STEEL SHALL COMPLY WITH CAN/CSA G40.18
4. DO NOT ADD WATER TO CONCRETE ONSITE.
5. ENSURE A MINIMUM COVER OF 75mm TO THE GROUND IN ALL BELOW GRADE CONCRETE.
6. CONCRETE MATERIAL TO BE:
    1. FOOTINGS: CLASS F-2 CONCRETE WITH A MINIMUM 28 DAY COMPRESSIVE STRENGTH OF 25 MPa, MAXIMUM WATER/CEMENT RATIO OF 0.55, MAXIMUM COARSE AGGREGATE SIZE OF 20mm, 4-7% AIR CONTENT, AND A MAXIMUM SLUMP OF 50-100mm.
    2. SLAB ON GRADE: CLASS C-2 CONCRETE WITH A MINIMUM 28 DAY COMPRESSIVE STRENGTH OF 32 MPa, MAXIMUM WATER/CEMENT RATIO OF 0.45, MAXIMUM COARSE AGGREGATE SIZE OF 20mm, 5-8% AIR CONTENT AND A MAXIMUM SLUMP OF 50-100mm.
7. CONCRETE REINFORCING TO DEFORMED MINIMUM YIELD STRENGTH OF 400 MPa
8. PIT RUN GRAVEL WILL NOT BE ACCEPTABLE.
9. ALL REINFORCING CHAIRS SHALL BE PLASTIC
10. ALL FORM OIL TO BE NON-STAINING MINERAL OIL, FREE OF KEROSENE.
11. WELDED WIRE MESH SHALL BE IN ACCORDANCE WITH ASTM A1064.
12. VIBRATE ALL CONCRETE TO ENSURE THAT CONCRETE IS FREE FROM VOIDS AND OTHER DEFECTS.
13. MOIST CURE ALL CONCRETE 7 DAYS.
14. IN HOT OR COLD WEATHER CONDITIONS TAKE ADDITIONAL PRECAUTIONS AS PER CAN/CSA A23.1/2.
15. UNLESS NOTED OTHERWISE, FASTEN ALL HARDWARE TO CONCRETE USING EITHER:
    1. SIMPSON STRONG TIE "TITEN HD" Ø½ X 5" SS CONCRETE SCREW
    2. THREADED ROD WITH SIMPSON STRONG TIE "SET 3G" OR HILTI "HY-200" EPOXY.
    3. REFER TO RESPECTIVE MANUFACTURER's INSTRUCTIONS FOR INSTALLATION PROCEDURE

FOR U.S. INSTALLATION SITES USE THESE NOTES

GENERAL NOTES

1. THIS DRAWING IS THE PROPERTY OF EARTHSCAPE. DO NOT COPY OR DISTRIBUTE WITHOUT PERMISSION.
2. EARTHSCAPE RESERVES OWNERSHIP OF ALL DRAWINGS, SPECIFICATIONS, AND OTHER DOCUMENTS, INCLUDING THOSE IN ELECTRONIC FORM, AUTHORED BY EARTHSCAPE. UPON SIGNING CONTRACT, EARTHSCAPE GRANTS THE OWNER LIMITED LICENSE TO USE THE INSTRUMENTS OF SERVICE SOLELY FOR USING AND MAINTAINING, OR ADDING TO THE PROJECT
3. ENGINEERING AND STRUCTURAL REVIEW: EARTHSCAPE PROVIDES STAMPED DRAWINGS AND/OR STRUCTURAL LOAD TESTING FOR ONTARIO, AS REQUIRED BY ASTM F-1487-17. LOCAL ENGINEERING APPROVAL FOR JURISDICTIONS OUTSIDE ONTARIO, IF REQUIRED, TO BE PROVIDED BY OTHERS.
4. EARTHSCAPE DESIGNS AND ENGINEERS FOR A FROST PENETRATION DEPTH OF 48". SLAB ON GRADE CONSTRUCTION IS SUBJECT TO FROST MOVEMENTS. FREE DRAINING SOIL UNDER THE FOOTING IS USED TO MINIMIZE FROST EFFECTS. OVERALL TOWER/SLAB MOVEMENT MAY OCCUR.
5. INSPECTION AND TESTING: INSPECTION, TESTING (INCLUDING CONCRETE TESTING), PRE-CONSTRUCTION SURVEYS TO BE COMPLETED BY OTHERS.
6. SURFACING: WHEN AN IMPACT-ABSORBING SURFACE MATERIAL IS REQUIRED, IT MUST COMPLY WITH ASTM F-1292 (MOST RECENT EDITION) FOR THE DEFINED FALL HEIGHT OF THE EQUIPMENT SPECIFIED IN DRAWINGS BY EARTHSCAPE OR A CONTRACTUALLY OBLIGATED CRITICAL HEIGHT SPECIFIED IN ADVANCE. ENSURE USE ZONES, SAFETY ZONES, AND/OR PROTECTIVE SURFACING ZONES AROUND ALL PLAY EQUIPMENT ARE COMPLIANT WITH ASTM F-1292 (MOST RECENT EDITION) - BY OTHERS.
7. SURVEY AND FACILITIES: SURVEY WORK INCLUDING BENCHMARKS, LINES AND LEVELS, PRE-CONSTRUCTION SURVEY, AS-BUILT DRAWINGS BY OTHERS
8. THESE DRAWINGS ARE INTENDED TO BE PRINTED AT 11" X 17" PAGE SIZE. DO NOT SCALE
9. ALL MEASUREMENTS ARE IN FEET-INCHES UNLESS OTHERWISE STATED
10. EQUIPMENT SHALL COMPLY WITH THE REQUIREMENTS OF ASTM F1487-17 "STANDARD CONSUMER SAFETY PERFORMANCE SPECIFICATION FOR PLAYGROUND EQUIPMENT"
11. VISUAL DETAILS INCLUDING BUT NOT LIMITED TO: NET SPACING, ROPE APPEARANCE AND COLOURS ARE FOR CONCEPTUAL PURPOSES ONLY
12. ALWAYS WEAR PROPER PPE AND FOLLOW SAFE PRACTICES.
13. ALL WORK SHALL BE COMPLETED IN ACCORDANCE WITH THE OCCUPATIONAL HEALTH AND SAFETY ACT.
14. CONTRACTOR IS RESPONSIBLE FOR CONFIRMING ALL SITE CONDITIONS AND REPORTING DISCREPENCIES TO EARTHSCAPE IMMEDIATELY.
15. EARTHSCAPE IS NOT RESPONSIBLE FOR THIRD PARTY USE OF THESE DRAWINGS

FASTENERS

1. METRIC/IMPERIAL DIAMTER CONVERSIONS:
    1. 8mm=5/16", 10mm=3/8", 12mm=1/2", 25mm=1"
    2. ROUND UP TO NEAREST STANDARD LENGTH FOR MANUFACTURER
2. ALL FASTENERS ARE TO BE STAINLESS STEEL (UNLESS OTHERWISE NOTED)
3. ALL BOLT HOLES SHALL BE PRE-DRILLED AND SHALL BE NOT LESS THAN 3/64" AND NOT GREATER THAN 5/64" LARGER THAN THE NOMINAL HOLE DIAMETER
4. FOR PARTIALLY THREADED SCREWS, EMBED FULL THREAD INTO SECONDARY MEMBER OR TO A DEPTH AS SPECIFIED ON DRAWINGS.
5. WHERE PRE-DRILLING OF SCREWS IS RECOMMENDED BY THE SCREW MANUFACTURER, HOLE DIAMETER TO BE STRICTLY AS PER MANUFACTURER'S RECOMMENDATIONS.
6. DO NOT USE IMPACT DRILLS FOR SCREW INSTALLATION.
7. DO NOT USE A HAMMER TO ENGAGE THE FASTENER WITH THE WOOD.
8. ALL FASTENERS TO BE INSTALLED AS POSITIONED ON SHOP DRAWINGS.
9. ALL BOLTED CONNECTIONS ARE TO BE SECURED USING VIBRA-TITE "VC-3" THREAD-LOCKING FLUID OR EQUIVILENT

EXCAVATION AND BACKFILL

1. STRIP ALL TOP SOIL, PAVING, AND DELETERIOUS MATERIAL FROM UNDER FOOTINGS.
2. LOCATE ALL SERVICES PRIOR TO COMPLETING EXCAVATION.
3. ALL FOOTINGS SHALL BE PLACED AT A MINIMUM OF 4' BELOW GRADE UNLESS OTHERWISE NOTED ON THE DRAWINGS.
4. SUPPORTING SUBGRADE AND FILL TO HAVE A MINIMUM BEARING CAPACITY OF 3000PSF.
5. ALL FOOTINGS AND SLABS TO BE PLACED ON EITHER NATIVE GRAVEL/SAND/CLAY OR 6" OF GRANULAR A COMPACTED TO A MINIMUM STANDARD PROCTOR DRY DENSITY OF 98%.
6. BENEATH 6" TOP LAYER OF COMPACTED GRANULAR A, GRANULAR B FILL CAN BE USED AS REQUIRED PLACED IN MAXIMUM 8" LIFTS, COMPACTED TO A STANDARD PROCTOR DRY DENSITY OF 96%.
7. CONTRACTOR IS RESPONSIBLE FOR SUPPORT OF EXCAVATIONS DURING CONSTRUCTION AS REQUIRED.

CONCRETE

1. ALL CONCRETE WORK AND MATERIALS SHALL BE IN ACCORDANCE WITH ACI-301
2. ALL REINFORCING STEEL TO BE IN ACCORDANCE WITH ASTM A615 AND ACI-301 INCLUDING FABRICATION, DETAILING, LAP SPLICES, PLACEMENT, FIXING AND COVER.
3. REINFORCING STEEL SHALL COMPLY WITH ASTM A615
4. DO NOT ADD WATER TO CONCRETE ONSITE.
5. ENSURE A MINIMUM COVER OF 3" TO THE GROUND IN ALL BELOW GRADE CONCRETE.
6. CONCRETE MATERIAL TO BE:
    1. FOOTINGS AND SLABS: CONCRETE WITH A MINIMUM 28 DAY COMPRESSIVE STRENGTH OF 4000 PSI, MAXIMUM WATER/CEMENT RATIO OF 0.50, MAXIMUM COARSE AGGREGATE SIZE OF 3/4", 4-7% AIR CONTENT (WHERE CONCRETE PLACED ABOVE FROST), AND A MAXIMUM SLUMP OF 2 - 4 INCHES.
7. CONCRETE REINFORCING TO DEFORMED MINIMUM YIELD STRENGTH OF 58000 PSI
8. PIT RUN GRAVEL WILL NOT BE ACCEPTABLE.
9. ALL REINFORCING CHAIRS SHALL BE PLASTIC
10. ALL FORM OIL TO BE NON-STAINING MINERAL OIL, FREE OF KEROSENE.
11. WELDED WIRE MESH SHALL BE IN ACCORDANCE WITH ASTM A1064.
12. VIBRATE ALL CONCRETE TO ENSURE THAT CONCRETE IS FREE FROM VOIDS AND OTHER DEFECTS.
13. MOIST CURE ALL CONCRETE 7 DAYS.
14. IN HOT OR COLD WEATHER CONDITIONS TAKE ADDITIONAL PRECAUTIONS AS PER ACI 305 OR 306 RESPECTIVELY.
15. UNLESS NOTED OTHERWISE, FASTEN ALL HARDWARE TO CONCRETE USING EITHER:
    1. SIMPSON STRONG TIE "TITEN HD" Ø½ X 5" SS CONCRETE SCREW
    2. THREADED ROD WITH SIMPSON STRONG TIE "SET 3G" OR HILTI "HY-200" EPOXY
    3. REFER TO RESPECTIVE MANUFACTURER'S INSTRUCTIONS FOR INSTALLATION PROCEDURE

PROPERTY OF EARTHSCAPE PLAY INC. - DO NOT COPY. DO NOT DISTRIBUTE.

INSTALLATION INSTRUCTIONS

EARTHSCAPE COLLECTIONS

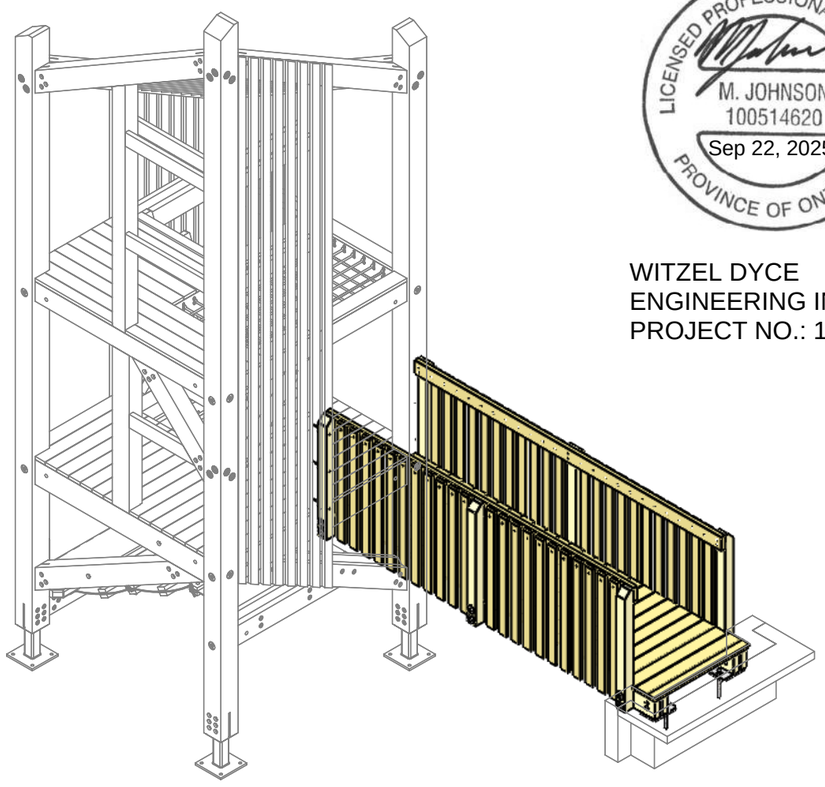

LICENSED PROFESSIONAL ENGINEER
M. JOHNSON
100514620
Sep 22, 2025
PROVINCE OF ONTARIO

WITZEL DYCE
ENGINEERING INC.
PROJECT NO.: 12936-165

MODIFIED TIMBER BRIDGE 12'

THESE INSTRUCTIONS APPLY TO THE FOLLOWING VERSIONS OF THIS PRODUCT:

1209039 - MODIFIED TIMBER BRIDGE 12'

PROJECT NUMBER: ESC0499
DESIGNED FOR: HURLD PARK
TO BE INSTALLED IN: WOBURN, MA

NOTE: COLOURS SHOWN ARE REPRESENTATIONAL AND MAY NOT BE THE SAME AS THOSE OF THE SUPPLIED PRODUCT

FOR CSA AND ASTM SPECIFICATIONS AND GENERAL NOTES SEE MAIN STRUCTURE INSTALLATION PACKAGE

DATE DOCUMENT RELEASED 2025-09-18
DOCUMENT NUMBER: 1209450-R1

PROPERTY OF EARTHSCAPE PLAY INC. - DO NOT COPY. DO NOT DISTRIBUTE.

PLEASE READ ALL INSTRUCTIONS

Before starting to install this equipment be sure to read through and understand these instructions.

If you have any questions, contact your Earthscape Representative for assistance before proceeding.

MEASUREMENTS AND STANDARDS

Measurements have been provided in both metres and [feet-inches]. Ensure to follow standards noted for the location in which this play equipment is being installed. Those marked CSA are to be used in Canada and those marked ASTM to be used in the United States.

LIST OF ABBREVIATIONS

AYC = Alaskan Yellow Cedar
WRC = Western Red Cedar
DPS = Designated Play Surface
SS = Stainless Steel
HDG = Hot Dipped Galvanized
WWM = Welded Wire Mesh
TYP = Typical
C/W = Complete With
UNO = Unless Noted Otherwise
EWF = Engineered Wood Fiber
PIP = Poured-In-Place Rubber Surfacing
PT = Pressure Treated

TOOLS SUPPLIED WITH THIS PRODUCT

- No tools supplied

TOOLS THE INSTALLER NEEDS TO SUPPLY

- High torque drill
- Set of wood drill bits up to 1/2"
- T25 drive bit
- T40 drive bit
- Circular saw
- 1/2" Impact driver
- Socket set up to 1-1/8"
- Hammer Drill
- Concrete drill bit set up to and including size required by epoxy manufacturer to set 3/4" threaded rod 8" deep in concrete abutment
- Angle grinder (With course 24 grit sanding disks and metal cut off disks
- Transit or laser Level
- Rigging and lifting straps

EQUIPMENT THE INSTALLER NEEDS TO SUPPLY

- Machine to lift and position 400 kg [870 lb] pre-assembled wooden bridge.

INSTALLER CREW AND TIME REQUIRED

Number of people needed: 3
Typical total person-hours to install: 3

Time breakdown:
- 1 hours x 3 people to position and anchor the bridge in place

MATERIALS THE INSTALLER NEEDS TO SUPPLY

- Epoxy - Simpson Strong Tie "Set 3G" or Hilti "Hy-200"

WARNINGS

These instructions do not provide specific guidance on the use of tools or the lifting and moving heavy objects. It is assumed that competent people are installing this product who are familiar with using the tools and equipment required and are knowledgeable and skilled at lifting and positioning heavy objects.

PROPERTY OF EARTHSCAPE PLAY INC. - DO NOT COPY. DO NOT DISTRIBUTE.

MAKE SURE YOU HAVE ALL THE PARTS

Examine the equipment and ensure you have all the required parts listed in the table below.

PART IMAGE	ITEM NO.	PART NO.	DESCRIPTION	QTY.
SEE IMAGE THIS SHEET	1	1209039	PRE-ASSEMBLED MODIFIED WOODEN BRIDGE 12'	1
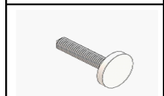	2	H16685	WOOD SCREW, WASHER HEAD M8X100, SS	4
	3	H16687	WOOD SCREW, WASHER HEAD M8X200, SS	6
	4	H20028	THREADED STUD 3/4"X 12" HDG	2
	5	H30080	WASHER 3/4" X 2" HDG	2
	6	H40046	HEX NUT 3/4-10 HDG	4

IMAGES OF FASTENERS IN THIS TABLE ARE REPRESENTATIONAL TO HELP IDENTIFY PARTS.

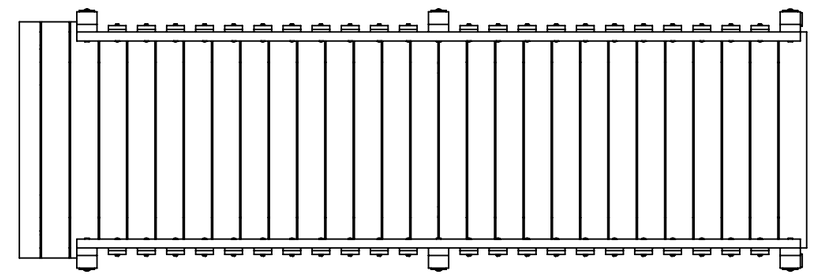

PLAN VIEW

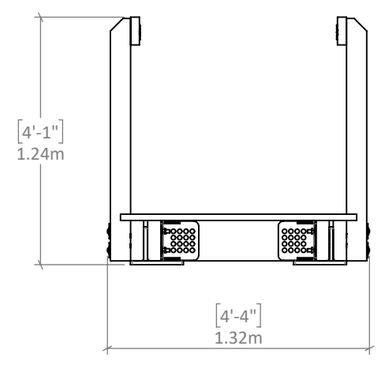

FRONT VIEW

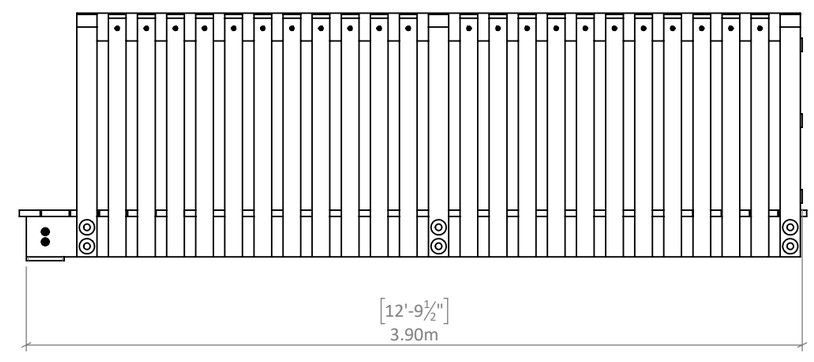

SIDE VIEW

TIMBER BRIDGE SHIPPED PRE-ASSEMBLED AS SHOWN
WEIGHT: 400 KG [870 LB]

PROPERTY OF EARTHSCAPE PLAY INC. - DO NOT COPY. DO NOT DISTRIBUTE.

ABUTMENT DETAILS

ABUTMENT DETAILS OVERVIEW

Before installing the bridge ensure the concrete abutment is cured and matches the specifications shown on this sheet.

Concrete to be provided by installer.

REACTION LOADS

- DL = 250 lbs
- LL = 900 lbs
- Playground loading = 1500 lbs (not to be considered with live load
- SL = 650 lbs
- WL = 625 lbs (perp to bridge)
- EQ = 75 lbs (perp to bridge)

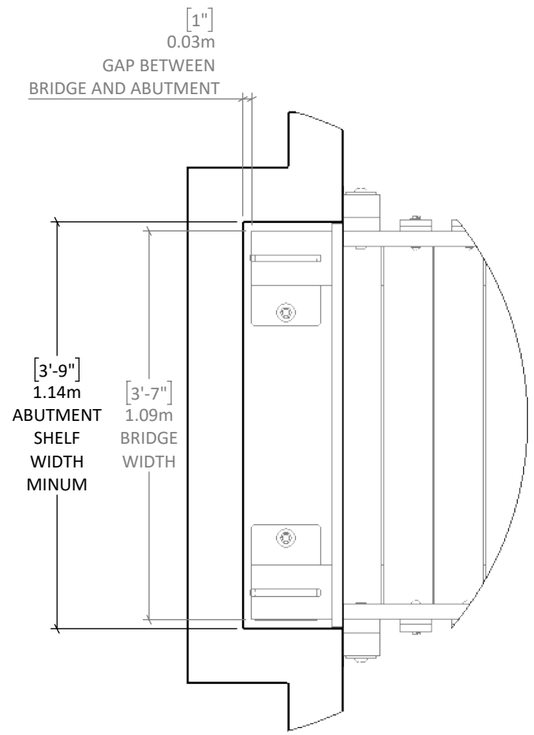

DETAIL A

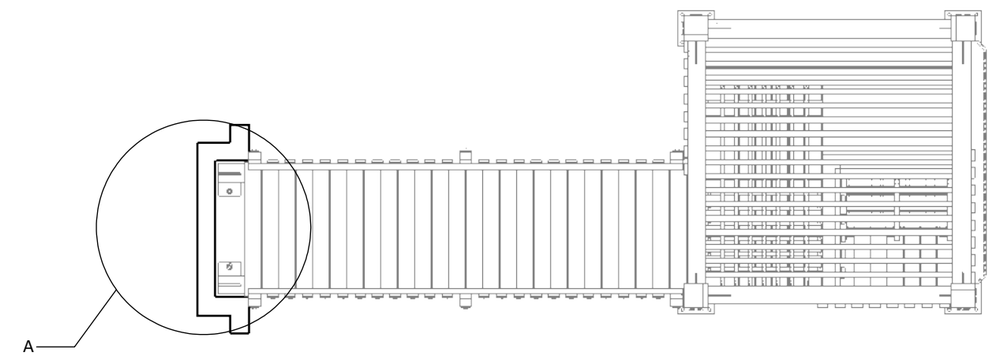

ABUTMENT PLAN VIEW

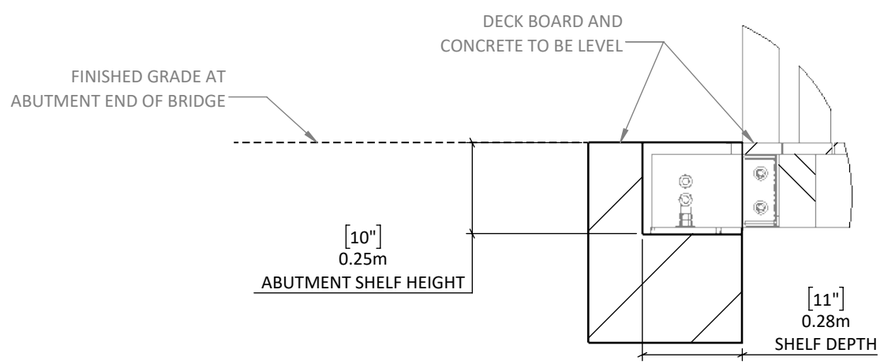

DETAIL B

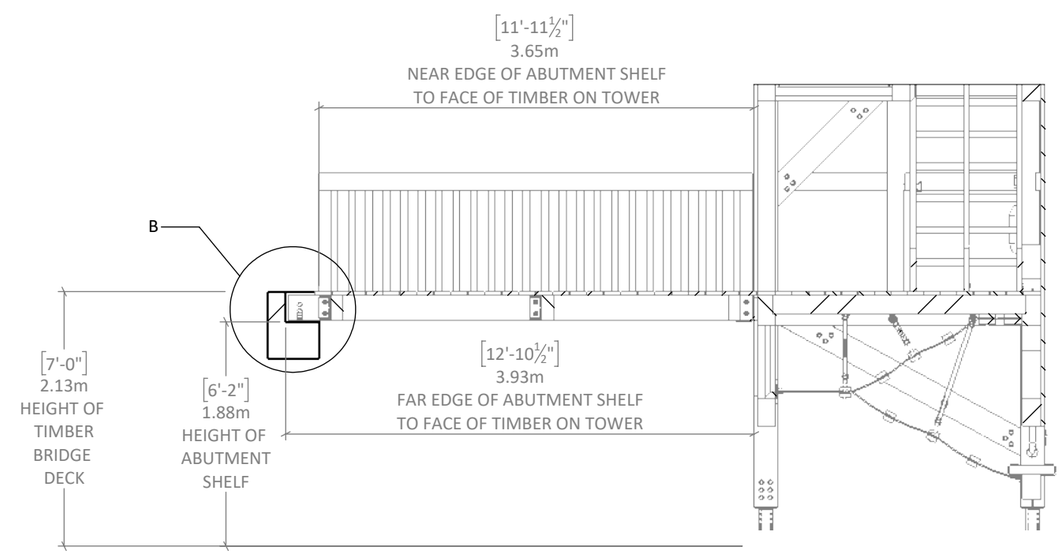

ABUTMENT LOCATION

PROPERTY OF EARTHSCAPE PLAY INC. - DO NOT COPY. DO NOT DISTRIBUTE.

PREP BRIDGE AND TOWER

MODIFIED TIMBER BRIDGE 12'

STEP 1 - CONFIRM WHERE THE ACCESSORY IS TO BE INSTALLED

Review the complete tower installation package to determine on which side this accessory is to be installed and what the finished product should look like.

STEP 2 - INSTALL BRIDGE PRIOR TO ANCHORING TOWERS TO FOUNDATION PAD

It might be necessary to make minor adjustments the position of the timber tower to suit the as-built bridge. Anchor tower after bridge has been installed. Ensure the tower opening is centered on the opening of the abutment, also the tower is parallel to the abutment face.

STEP 3 - PREP BRIDGE

Temporarily remove the end deckboards from both ends of bridge as per Figure 1. Make sure to note which end they came from and their orientation.

STEP 4 - ATTACH THE BRIDGE BRACKET TO TOWER

Attach the bridge bracket to the timber tower as shown in Section H-H.

STEP 5 - CONFIRM GAP BETWEEN TOWER AND ABUTMENT

Measure distance between the tower and the abutment concrete and compare to supplied bridge length. Pull tower away from concrete enough to be able to fit bridge between.

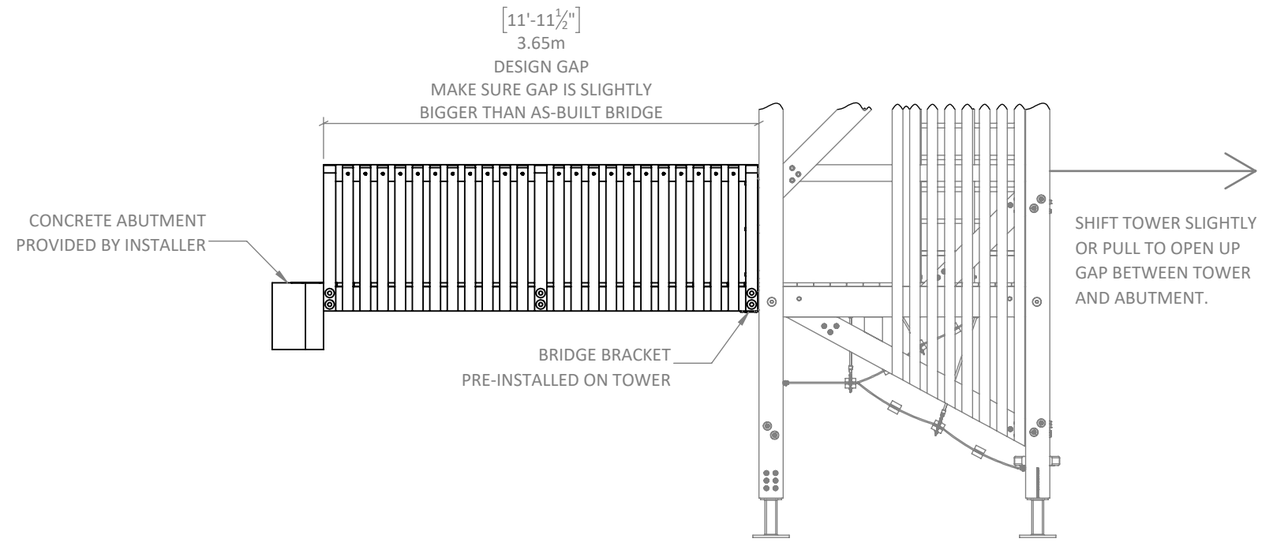

SIDE ELEVATION

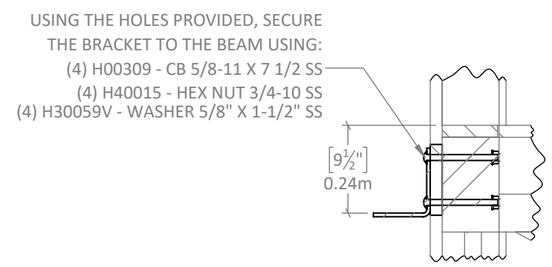

SECTION H-H

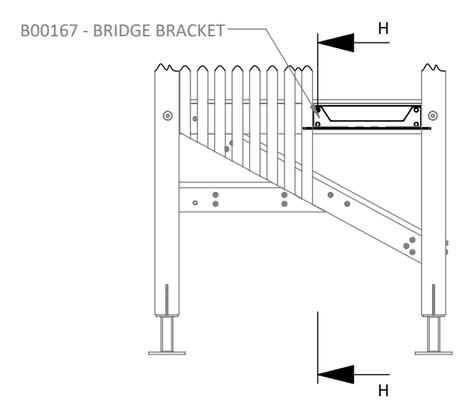

FRONT ELEVATION

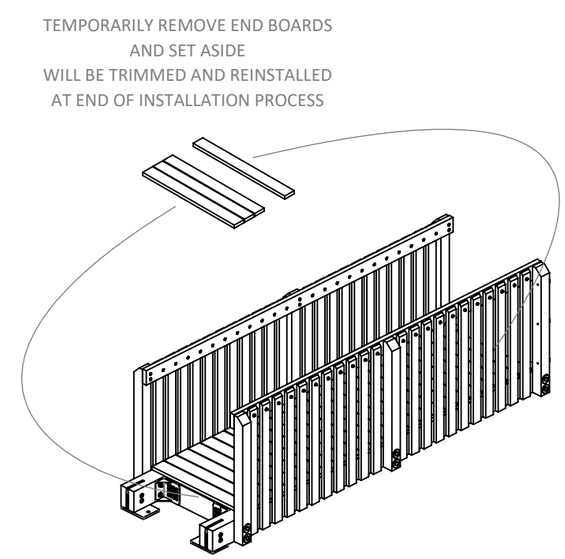

FIGURE 1

PROPERTY OF EARTHSCAPE PLAY INC. - DO NOT COPY. DO NOT DISTRIBUTE.

LIFT AND PLACE BRIDGE

MODIFIED TIMBER BRIDGE 12'

STEP 6 - LIFT AND PLACE BRIDGE

Lift bridge with appropriate equipment and move into position. Lower bridge on to the tower bracket and the concrete abutment. Ensure the bridge is centered in the tower opening and centered in the concrete abutment.

STEP 7 - ADJUST POSITION OF TOWERS

Draw the tower so the end of the bridge is tight to the tower and the bridge is sitting on the abutment. Ensure a gap is present from the end of the bridge to the concrete as shown in the plan view.

Make minor adjustments to the tower position to ensure both ends of the bridge are centered in the tower opening and the concrete abutment. Ensure the tower is tight to the end of the bridge.

STEP 8 - SECURE BRIDGE GUARDRAIL POSTS

Install screws through pre-drilled holes in the end guardrail posts into timber tower posts.

Pre-drill all screw holes as per general notes.

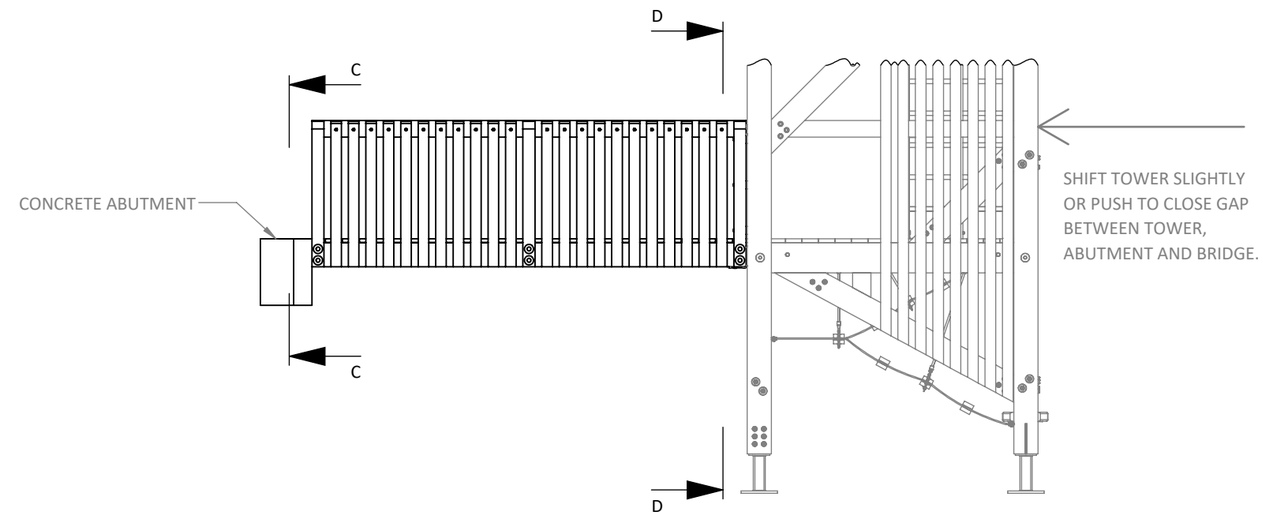

SIDE ELEVATION

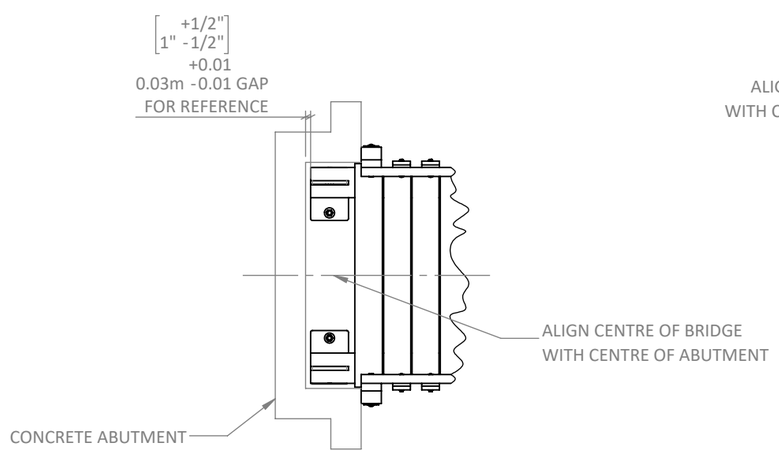

PLAN VIEW

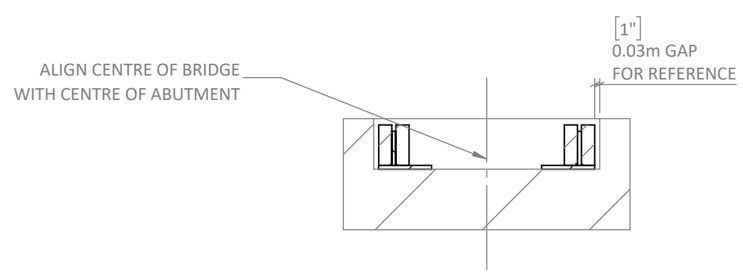

SECTION C-C
ABUTMENT SIDE

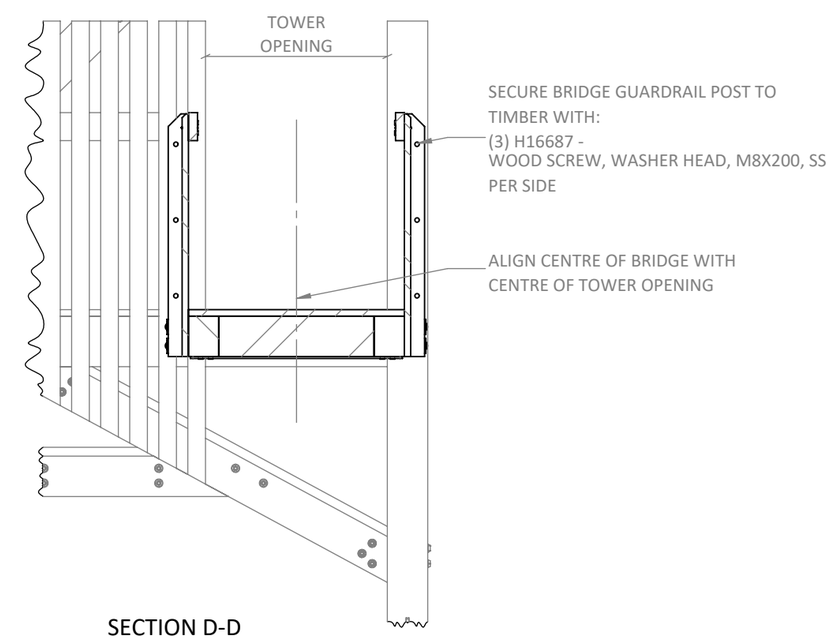

SECTION D-D
TOWER SIDE

PROPERTY OF EARTHSCAPE PLAY INC. - DO NOT COPY. DO NOT DISTRIBUTE.

STEP 9 - SECURE BRIDGE STRINGERS

Install screws through bottom of steel brackets into underside of bridge timber stringers.

Pre-drill all screw holes as per general notes in main installation package.

STEP 10 - SECURE BRIDGE TO ABUTMENT

Install threaded rod into concrete using epoxy, see general notes in the main installation package epoxy details. Cut and grind the top of the threaded rod after installation to ensure max two threads exposed.

Ensure a minimum threaded rod embedment depth of 6".

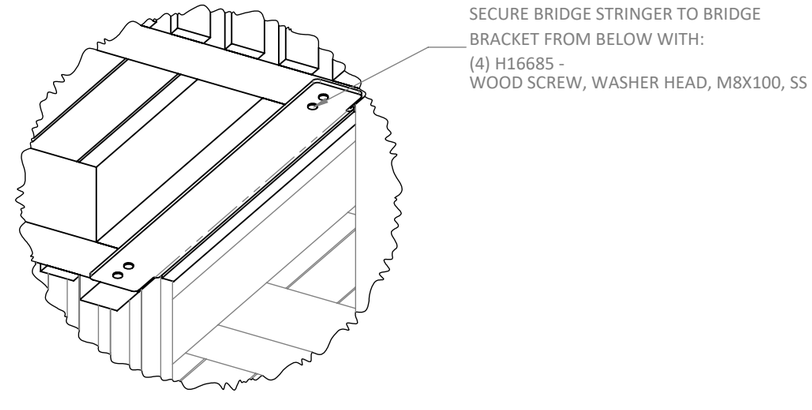

DETAIL E

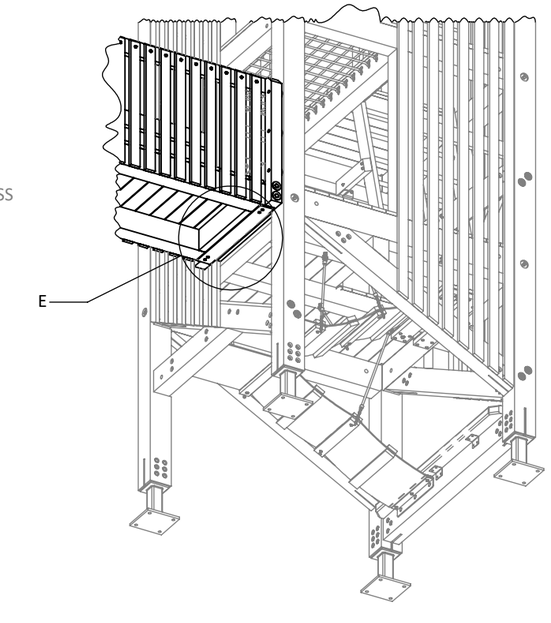

LOOKING UNDER BRIDGE

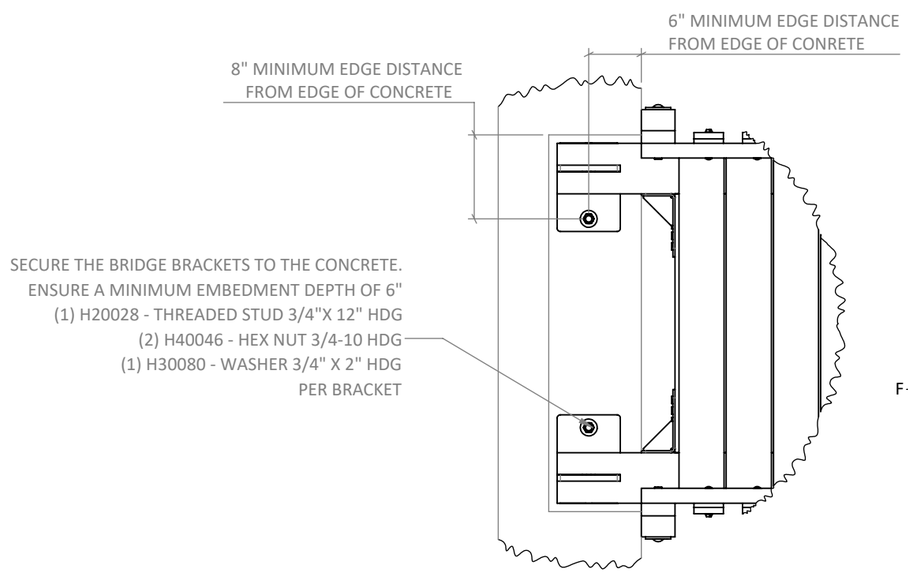

DETAIL F

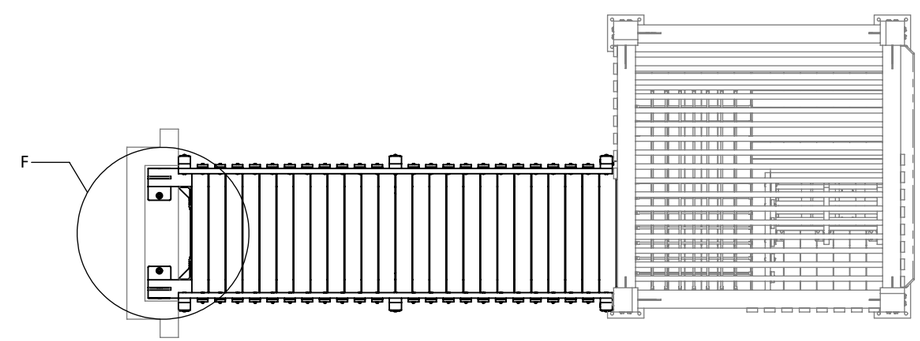

PLAN VIEW

PROPERTY OF EARTHSCAPE PLAY INC. - DO NOT COPY. DO NOT DISTRIBUTE.

REINSTALL DECKBOARDS

STEP 11 - REINSTALL DECKBOARDS AT TOWER

Trim the removed deckboards to suit the gap in decking between the bridge and tower.

Ensure a +/-6mm (1/4") gap between deckboards as per Detail K. Deckboards must not touch. Reinstall with the original screws.

STEP 12 - REINSTALL DECKBOARDS AT ABUTMENT

Trim the removed deckboards to suit the gap in decking between the bridge and the abutment. By design the deckboards are intended to be flush with the finished grade at the abutment.

Ensure a +/-6mm (1/4") gap between deckboards as per Detail J and L. Deckboards must not touch. Reinstall with the original screws.

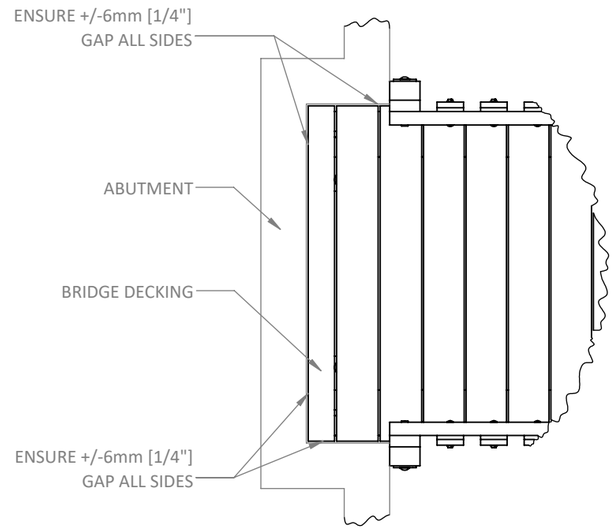

DETAIL L

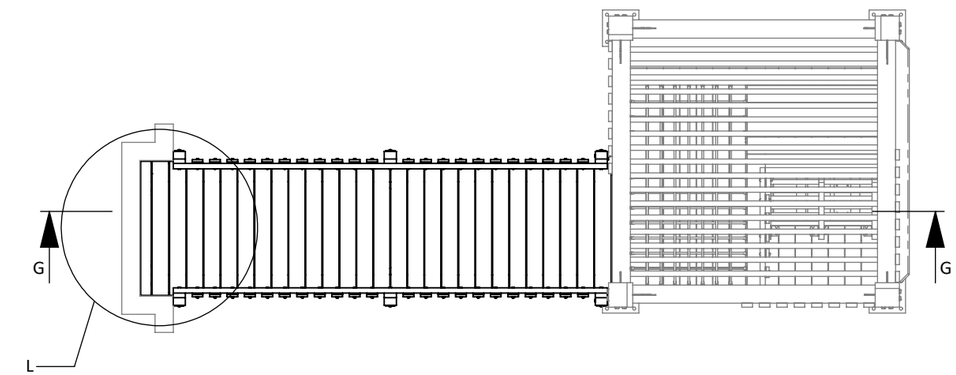

PLAN VIEW

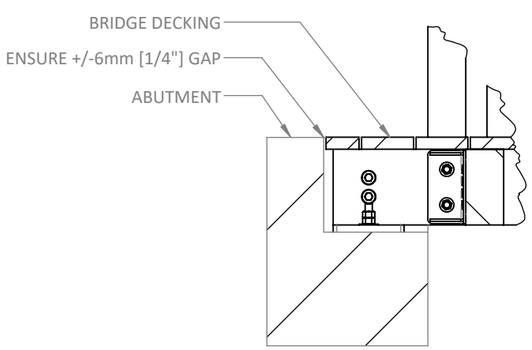

DETAIL J
DECKBOARDS AT ABUTMENT

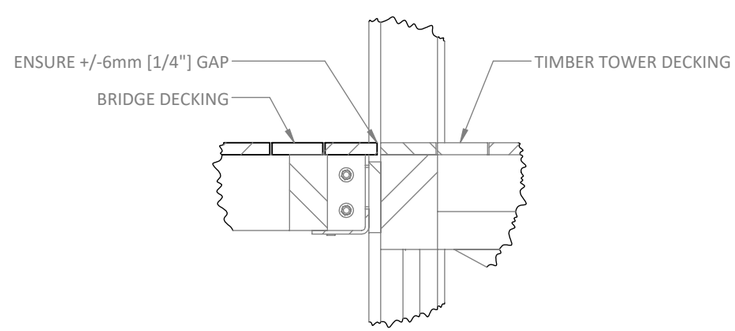

DETAIL K
DECKBOARDS AT TOWER

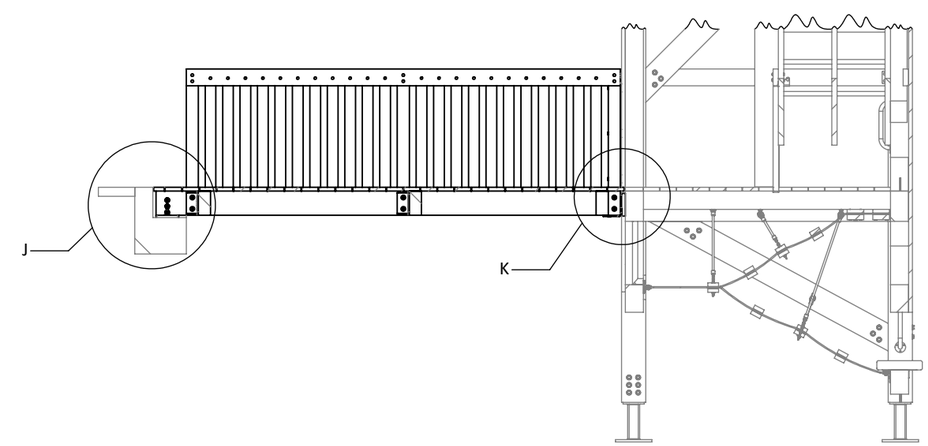

SECTION G-G

DATE DOCUMENT RELEASED 2025-09-18
DOCUMENT NUMBER: 1209450 - R1

PROPERTY OF EARTHSCAPE PLAY INC. - DO NOT COPY. DO NOT DISTRIBUTE.

INSTALLATION INSTRUCTIONS

EARTHSCAPE COLLECTIONS

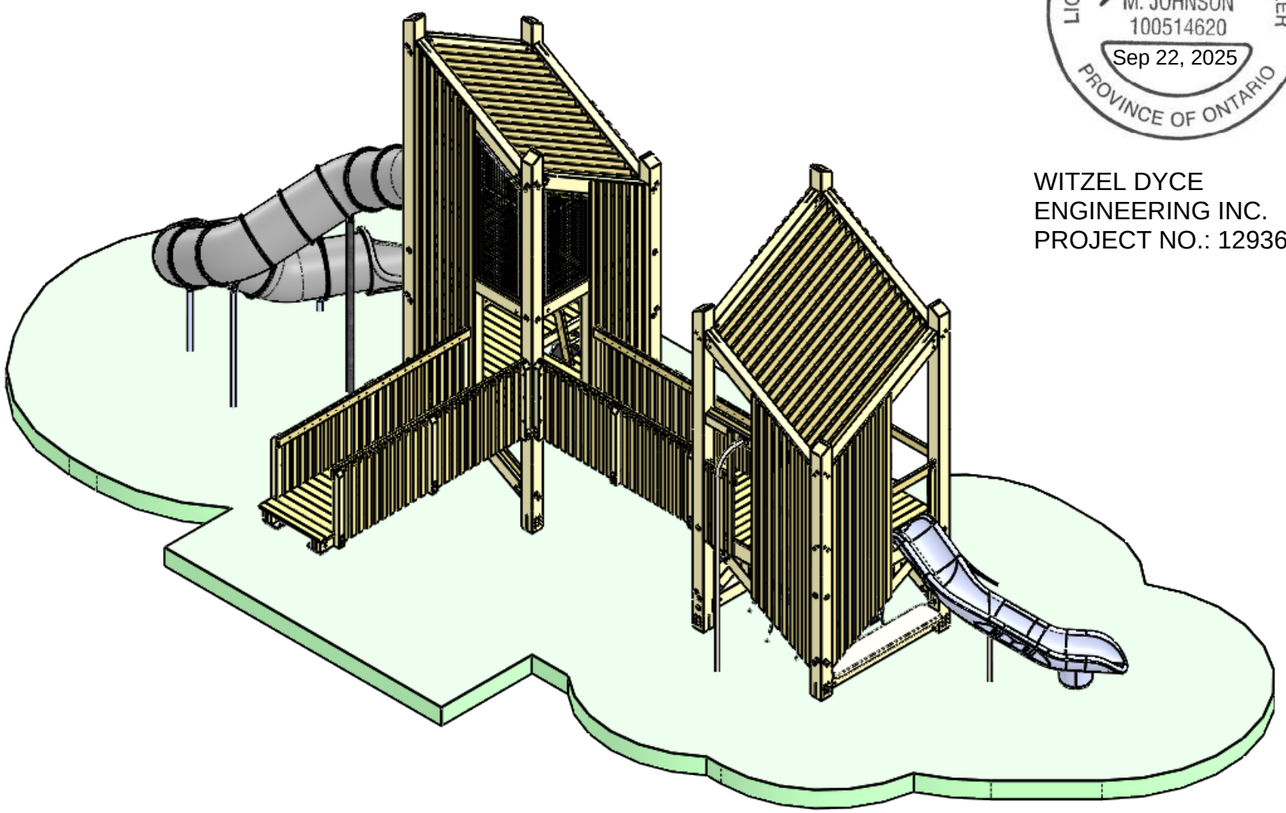

LICENSED PROFESSIONAL ENGINEER
M. JOHNSON
100514620
Sep 22, 2025
PROVINCE OF ONTARIO

WITZEL DYCE
ENGINEERING INC.
PROJECT NO.: 12936-165

COMBINED ASSEMBLY

THESE INSTRUCTIONS APPLY TO THE UNIQUE TOWER CONFIGURATION FOR:

PROJECT NUMBER: ESC0499
DESIGNED FOR: HURLD PARK
TO BE INSTALLED IN: WOBURN, MA

NOTE: COLOURS SHOWN ARE REPRESENTATIONAL AND MAY NOT BE THE SAME AS THOSE OF THE SUPPLIED PRODUCT

DATE DOCUMENT RELEASED 2025-09-18
DOCUMENT NUMBER: 1209315-R1

PROPERTY OF EARTHSCAPE PLAY INC. - DO NOT COPY. DO NOT DISTRIBUTE.

SPECIFICATIONS

INTENDED USER AGE GROUP: 5-12 y
MAXIMUM HEIGHT OF STRUCTURE: 24'0" ABOVE FINISHED PLAY SURFACE
MAXIMUM DESIGNATED FALL HEIGHT: 6'-8"
AREA OF SURFACING: 1420 ft²
APPROXIMATE AS SHIPPED WEIGHT:

- 1 LEVEL TIMBER TOWER - 4,350 LBS
- 2 LEVEL TIMBER TOWER - 5,500 LBS
- 10' WOODEN BRIDGE - 670 LBS
- 12' MODIFIED WOODEN BRIDGE - 870 LBS

RECOMMENDED INSTALLATION BUFFER

Play equipment requires a variety of offsets to other elements in a playground. The plan view on this page shows the minimum recommended area needed for installing this piece of play equipment by itself. Combining this play equipment with other pieces should be reviewed by a person with a Certified Playground Safety Inspector training.

The offset shown here includes a buffer beyond the ASTM requirements to account for fabrication and material variation.

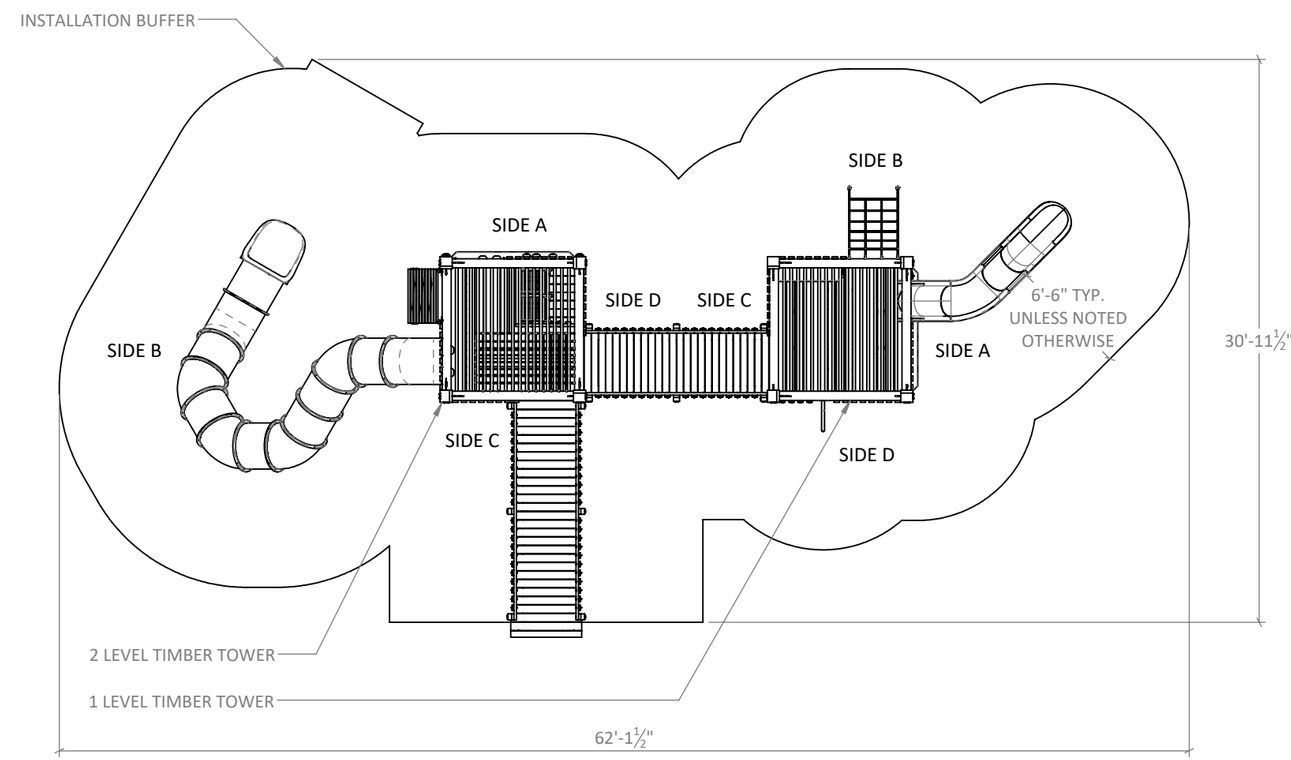

PROPERTY OF EARTHSCAPE PLAY INC. - DO NOT COPY. DO NOT DISTRIBUTE.

PLEASE READ ALL INSTRUCTIONS

Before starting to install this equipment be sure to read through and understand these instructions.

If you have any questions, contact your Earthscape Representative for assistance before proceeding.

Time, tools and materials noted on this sheet only cover the installation of the base timber tower. They do not include any of the add-ons. See separate installation packages to understand what additional time will be required.

MEASUREMENTS AND STANDARDS

Measurements have been provided in both metres and [feet-inches]. Ensure to follow standards noted for the location in which this play equipment is being installed. Those marked CSA are to be used in Canada and those marked ASTM to be used in the United States.

LIST OF ABBREVIATIONS

AYC = Alaskan Yellow Cedar
WRC = Western Red Cedar
DPS = Designated Play Surface
SS = Stainless Steel
HDG = Hot Dipped Galvanized
WWM = Welded Wire Mesh
TYP = Typical
C/W = Complete With
UNO = Unless Noted Otherwise
EWF = Engineered Wood Fiber
PIP = Poured-In-Place Rubber Surfacing
PT = Pressure Treated

TOOLS SUPPLIED WITH THIS PRODUCT

- None

TOOLS THE INSTALLER NEEDS TO SUPPLY

- T25 drive bit
- T40 drive bit
- High Torque Drill
- Wood drill bit set up to and including 1/2"
- 1/2" impact driver
- Socket Set up to and including 1-1/8"
- Hammer drill
- Concrete drill bit set up to and including size required by epoxy manufacturer to set 3/4" threaded rod 8" deep in concrete pad
- Angle grinder (with course 24 grit sanding disks and metal cut off disks)
- Transit or Laser Level
- Rigging and lifting straps

EQUIPMENT THE INSTALLER NEEDS TO SUPPLY

Machine to lift and position heaviest element.

- Pre-assembled 2 Level Tower 5,500 LBS lbs

INSTALLER CREW AND TIME REQUIRED

Number of people needed: 3
Typical total person-hours to install: 80 + concrete cure time

Time breakdown:

- 8 hours x 3 people for excavation and pouring concrete
- Time for concrete cure
- 16 hours x 3 people for onsite fabrication and play equipment installation
- 4 hours x 2 people for onsite Enclosed Bridge installation

MATERIALS THE INSTALLER NEEDS TO SUPPLY

- Threadmate threadlocker Vibra-Tite VC-3 (or equal)
- Epoxy - Simpson Strong Tie "Set 3G" or Hilti "Hy-200"
- Concrete - as specified in details

WARNINGS

These instructions do not provide specific guidance on the use of tools or the lifting and moving heavy objects. It is assumed that competent people are installing this product who are familiar with using the tools and equipment required and are knowledgeable and skilled at lifting and positioning heavy objects.

PROPERTY OF EARTHSCAPE PLAY INC. - DO NOT COPY. DO NOT DISTRIBUTE.

MAKE SURE YOU HAVE ALL THE PARTS

Examine the equipment and ensure you have all the required parts listed in the table below.

See "As Shipped Page" to understand orientation of product as delivered to site.

PART IMAGE	ITEM NO.	PART NO.	DESCRIPTION	QTY.
SEE IMAGE NEXT SHEET	1	1209039*	MODIFIED WOODEN BRIDGE 12'	1
SEE IMAGE THIS SHEET	2	F00185	1 LEVEL TIMBER TOWER	
NO IMAGE PROVIDED	3	F00227	CLIMBING HOLDS (PRE-INSTALLED)	1
SEE IMAGE NEXT SHEET	4	F00228*	CLADDED LADDER	1
SEE IMAGE THIS SHEET	5	F00302*	FILE POLE - SURFACE MOUNT 6' PLATFORM	1
SEE IMAGE THIS SHEET	6	F00308*	PLASTIC OPEN SLIDE - IN GROUND 6' - VEER LEFT	1
SEE IMAGE NEXT SHEET	7	F00316*	PLASTIC TUBE SLIDE - FLANGE 12' - TURN RIGHT	1
SEE IMAGE NEXT SHEET	8	F00363*	WOODEN BRIDGE 10'	1
SEE IMAGE NEXT SHEET	9	F00403*	SLING SEATS - PIP	1
SEE IMAGE THIS SHEET	10	F00405*	ACCESS CLIMBING NET - PIP	1
SEE IMAGE NEXT SHEET	11	F00407	2 LEVEL TIMBER TOWER	1
	12	H20019	THREADED STUD 3/4"-10 X 12" SS	32
	13	H30047V	WASHER 3/4" X 1-3/4" SS	32
	14	H40015	HEX NUT 3/4-10 SS	64

IMAGES OF FASTENERS IN THIS TABLE ARE REPRESENTATIONAL TO HELP IDENTIFY PARTS.

*THESE ASSEMBLIES INCLUDE ADDITIONAL HARDWARE. REVIEW THE SEPARATE INSTALLATION PACKAGES THAT CORRESPOND TO EACH ADD-ON FOR MORE INFORMATION.

F00405
ACCESS CLIMBING NET - PIP
SHIPS IN PIECES
SEE SEPARATE INSTALLATION PACKAGE FOR ADDITIONAL DETAILS

F00302
FIRE POLE - SURFACE MOUNT 6' PLATFORM
SHIPS IN PIECES
SEE SEPARATE INSTALLATION PACKAGE FOR ADDITIONAL DETAILS

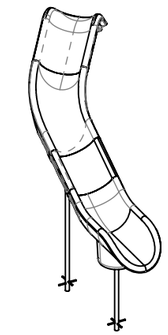

F00308
PLASTIC OPEN SLIDE - IN GROUND 6' - VEER LEFT
SHIPS IN PIECES
SEE SEPARATE INSTALLATION PACKAGE FOR ADDITIONAL DETAILS

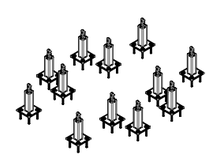

F00403
SLING SEATS - PIP
SHIPS IN PIECES
SEE SEPARATE INSTALLATION PACKAGE FOR ADDITIONAL DETAILS

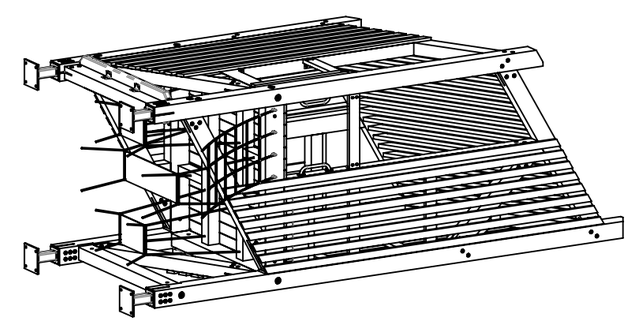

F00185
1 LEVEL TIMBER TOWER
SHIPS COMPLETE AS ILLUSTRATED
INSTALL DETAILS THIS PACKAGE

PROPERTY OF EARTHSCAPE PLAY INC. - DO NOT COPY. DO NOT DISTRIBUTE.

SUPPLIED PARTS (2 OF 2)

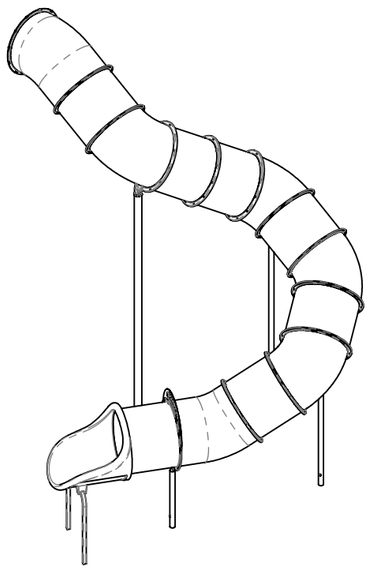

F00316
PLASTIC TUBE SLIDE - FLANGE
12' - TURN RIGHT
SHIPS IN PIECES
SEE SEPARATE INSTALLATION PACKAGE FOR
ADDITIONAL DETAILS

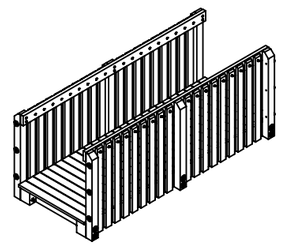

F00363
WOODEN BRIDGE 10'
SHIPS COMPLETE AS ILLUSTRATED
SEE SEPARATE INSTALLATION PACKAGE
FOR ADDITIONAL DETAILS

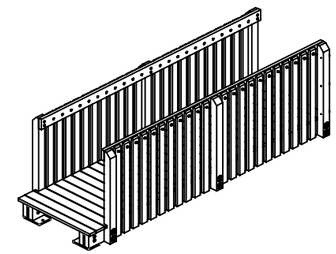

1209039
MODIFIED WOODEN BRIDGE 12'
SHIPS COMPLETE AS ILLUSTRATED
SEE SEPARATE INSTALLATION PACKAGE
FOR ADDITIONAL DETAILS

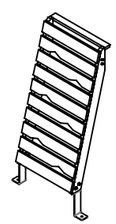

F00228
CLADDED LADDER
SHIPS COMPLETE AS ILLUSTRATED
SEE SEPARATE INSTALLATION PACKAGE FOR
ADDITIONAL DETAILS

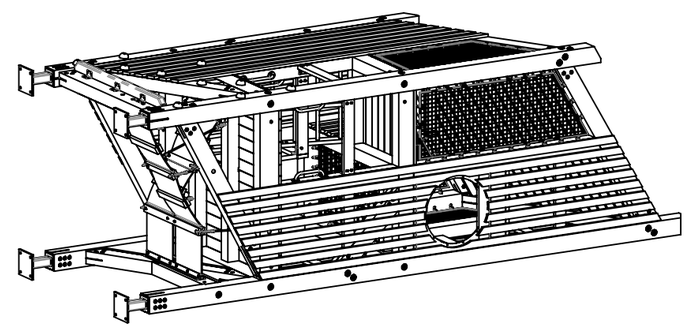

F00407
2 LEVEL TIMBER TOWER
SHIPS COMPLETE AS ILLUSTRATED
INSTALL DETAILS THIS PACKAGE

PROPERTY OF EARTHSCAPE PLAY INC. - DO NOT COPY. DO NOT DISTRIBUTE.

TOWER AS SHIPPED - 1 LEVEL TIMBER TOWER

COMBINED ASSEMBLY

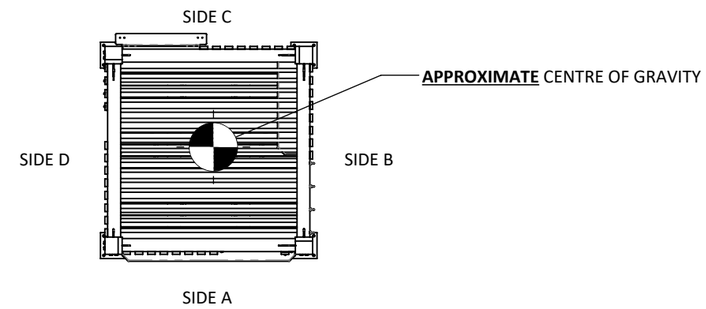

PLAN VIEW

PRE-ASSEMBLED TOWER AS SHIPPED
WEIGHS APPROXIMATELY:
4,350 LBS

DIMENSION TO
LIMITS OF POST
BASE BRACKETS

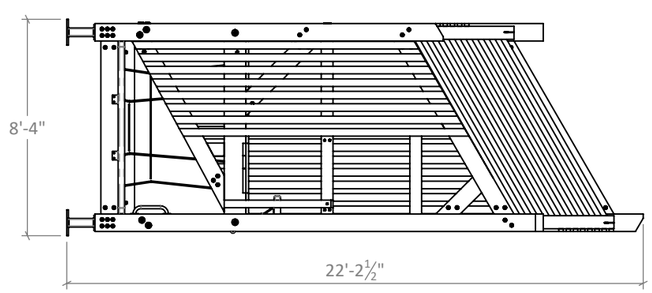

ORIENTATION ON TRUCK

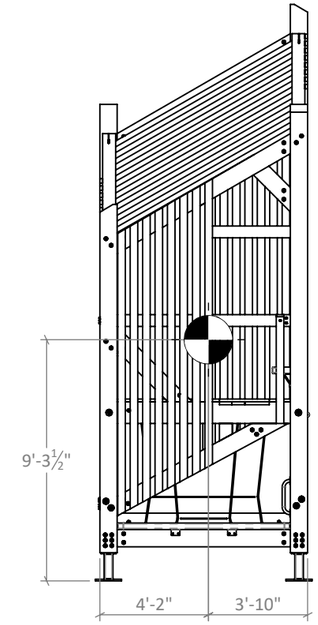

SIDE A ELEVATION

DIMENSIONS FROM OUTSIDE
FACE OF CORNER POSTS

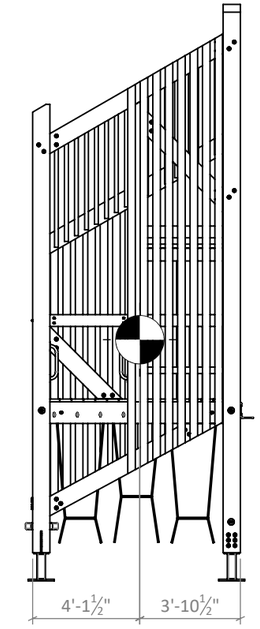

SIDE B ELEVATION

CENTRE OF GRAVITY

PROPERTY OF EARTHSCAPE PLAY INC. - DO NOT COPY. DO NOT DISTRIBUTE.

TOWER AS SHIPPED - 2 LEVEL TIMBER TOWER

COMBINED ASSEMBLY

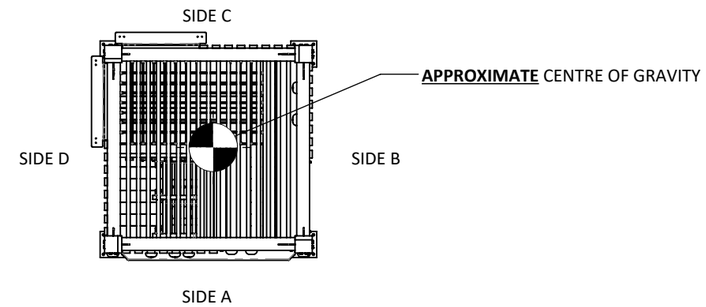

PLAN VIEW

PRE-ASSEMBLED TOWER AS SHIPPED
WEIGHS APPROXIMATELY:
5,500 LBS

DIMENSION TO
LIMITS OF POST
BASE BRACKETS

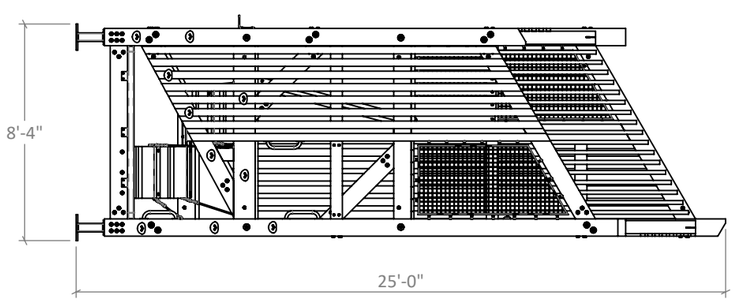

ORIENTATION ON TRUCK

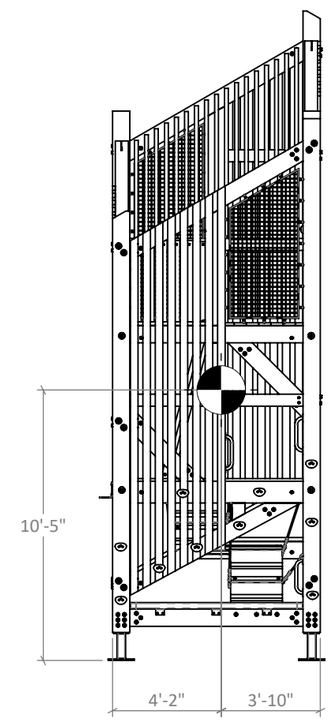

SIDE A ELEVATION

DIMENSIONS FROM OUTSIDE
FACE OF CORNER POSTS

CENTRE OF GRAVITY

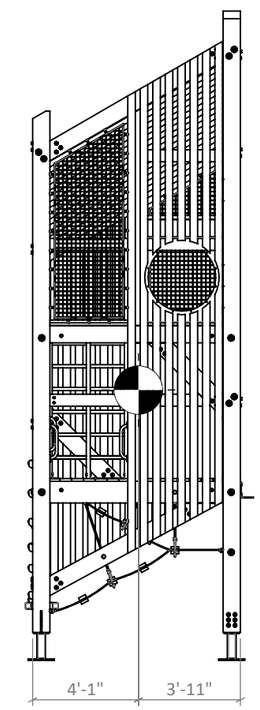

SIDE B ELEVATION

PROPERTY OF EARTHSCAPE PLAY INC. - DO NOT COPY. DO NOT DISTRIBUTE.

FINISHED PRODUCT - FRONT ISOMETRIC

WHAT THE FINISHED PRODUCT LOOKS LIKE

All concrete pads and play surfacing to be supplied by the installer.

Finished play surface is assumed to be level. Installation sites with sloped surfacing may not work with the supplied equipment. If the play surface is sloped contact your Earthscape Representative for assistance before proceeding.

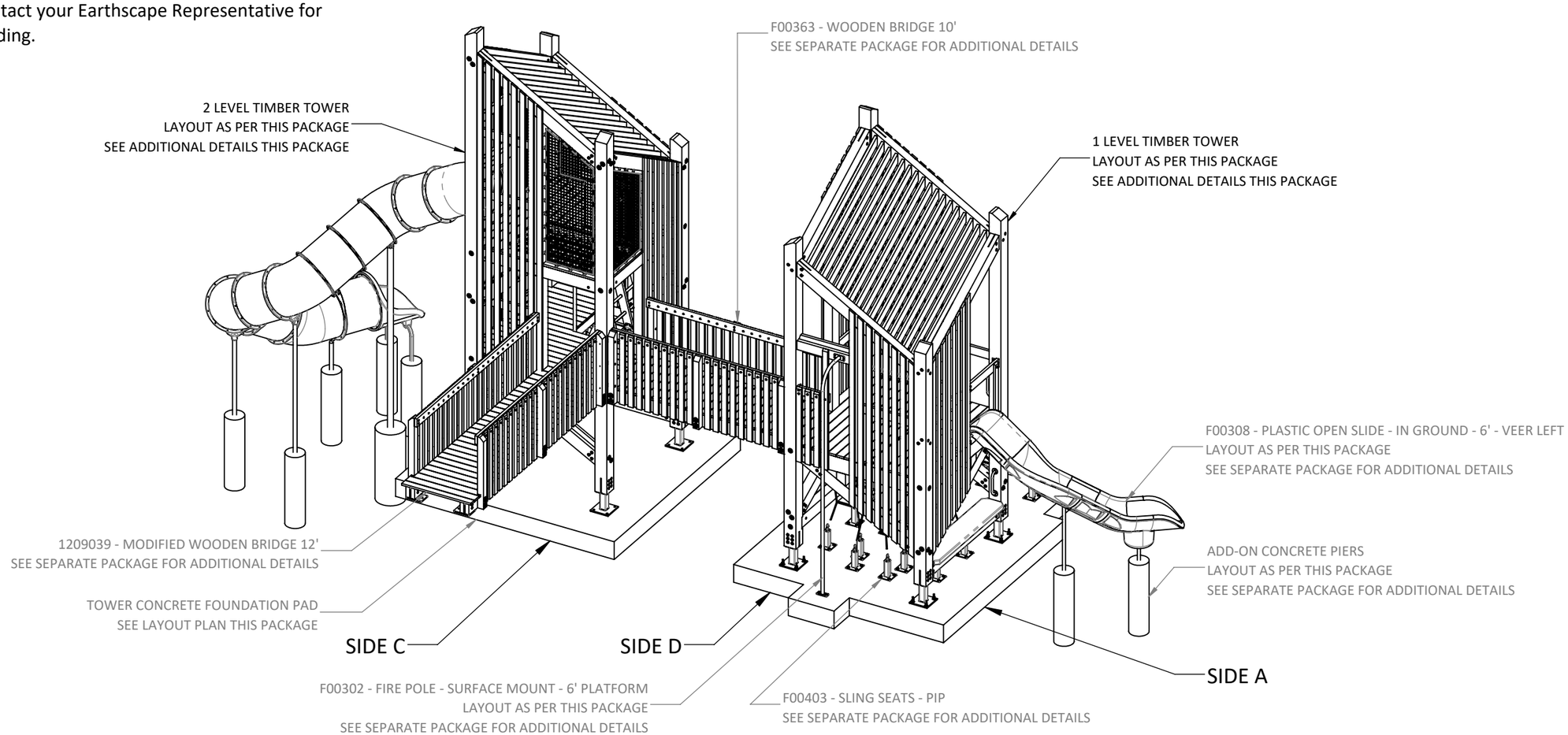

FRONT ISOMETRIC VIEW

PROPERTY OF EARTHSCAPE PLAY INC. - DO NOT COPY. DO NOT DISTRIBUTE.

FINISHED PRODUCT - REAR ISOMETRIC

WHAT THE FINISHED PRODUCT LOOKS LIKE

See note on the Finished Product - Front Isometric Sheet

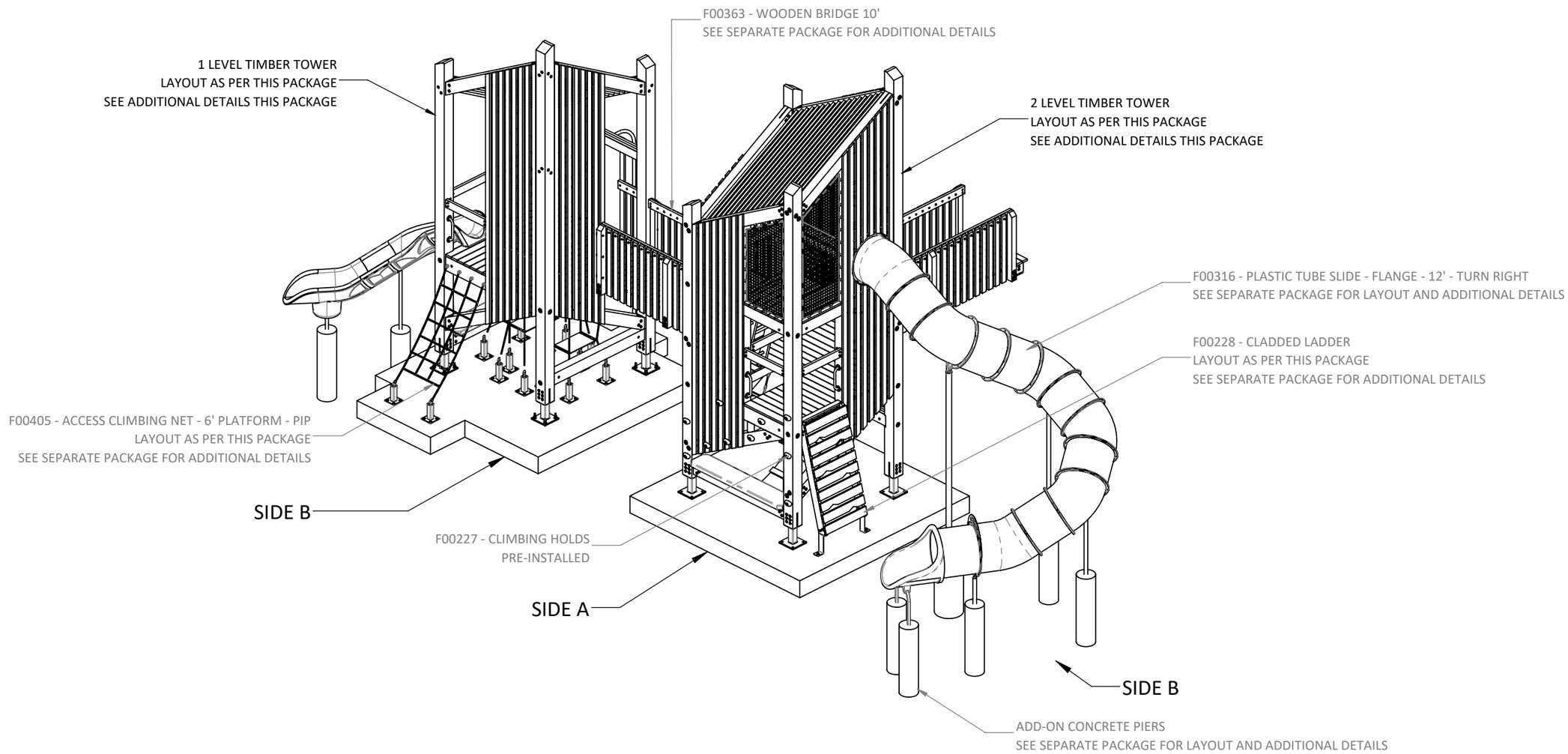

PROPERTY OF EARTHSCAPE PLAY INC. - DO NOT COPY. DO NOT DISTRIBUTE.

FINISHED PRODUCT - 1 LEVEL TIMBER TOWER

WHAT THE FINISHED PRODUCT LOOKS LIKE

See note on the Finished Product - Front Isometric Sheet

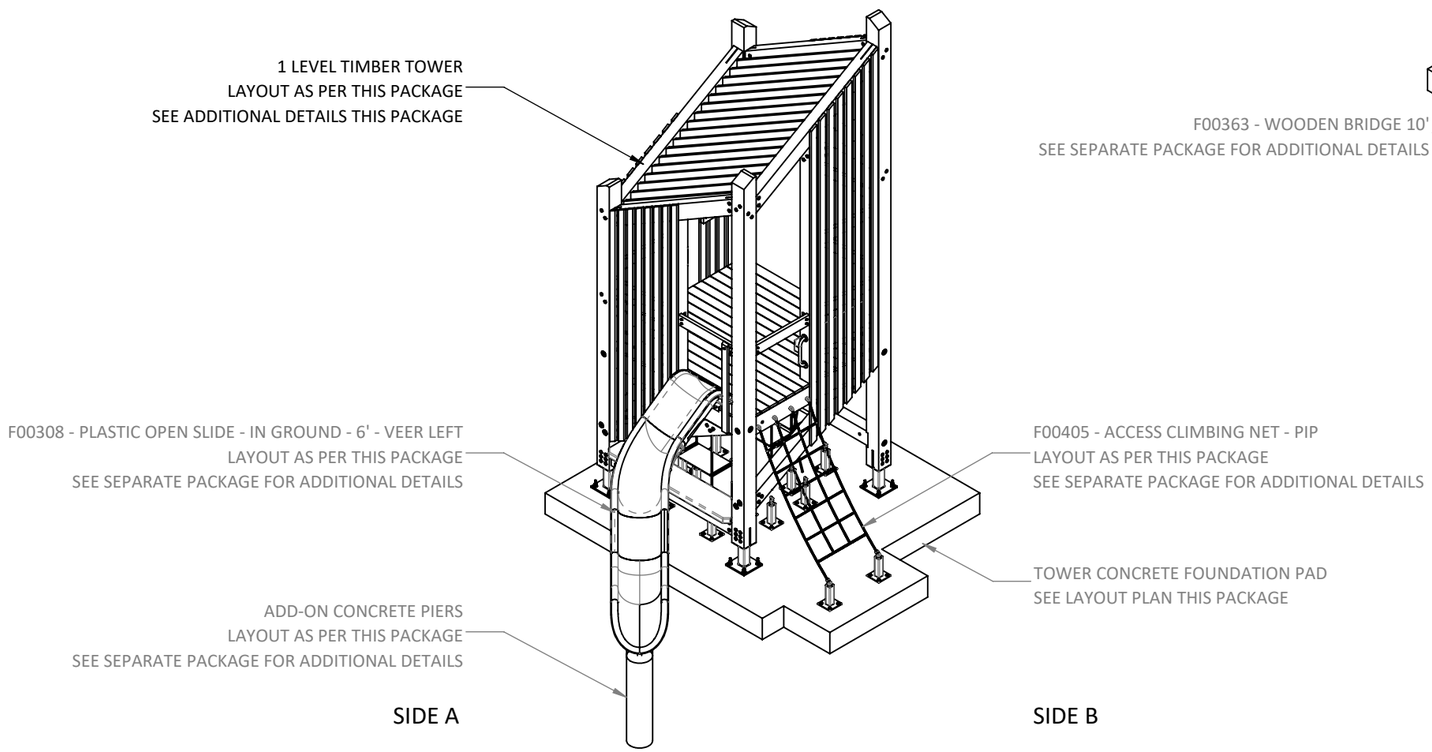

FRONT ISOMETRIC VIEW

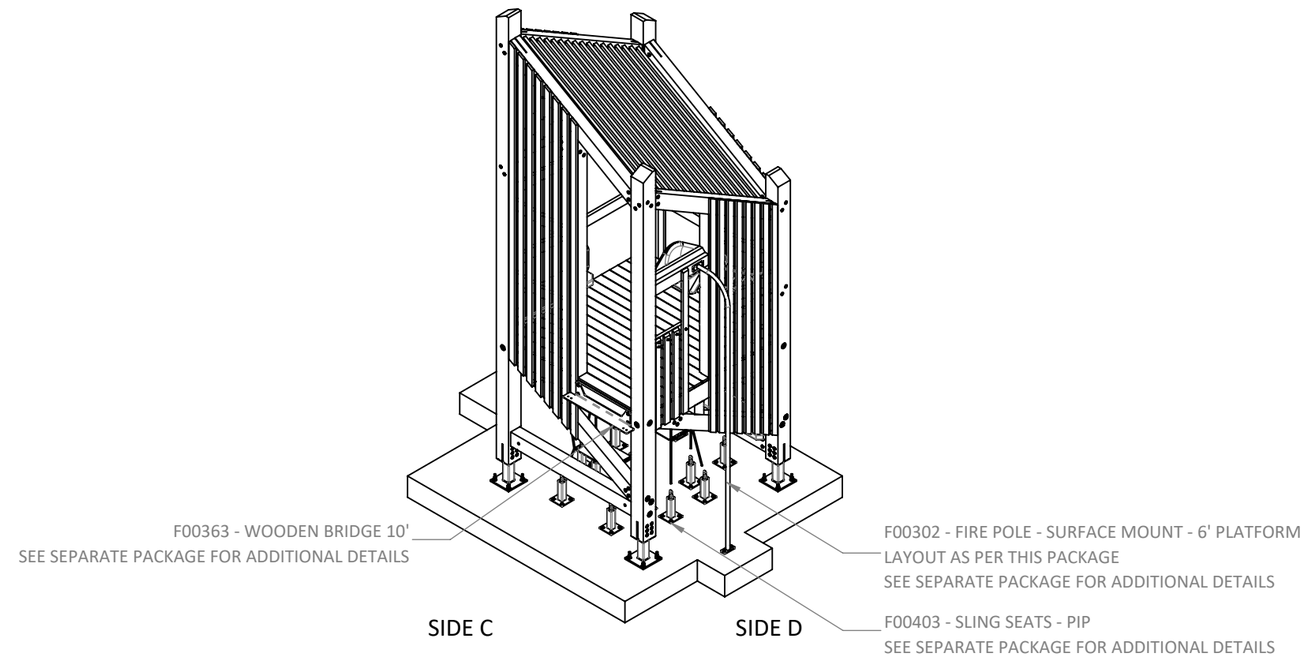

FRONT ISOMETRIC VIEW

PROPERTY OF EARTHSCAPE PLAY INC. - DO NOT COPY. DO NOT DISTRIBUTE.

FINISHED PRODUCT - 2 LEVEL TIMBER TOWER

WHAT THE FINISHED PRODUCT LOOKS LIKE

See note on the Finished Product - Front Isometric Sheet

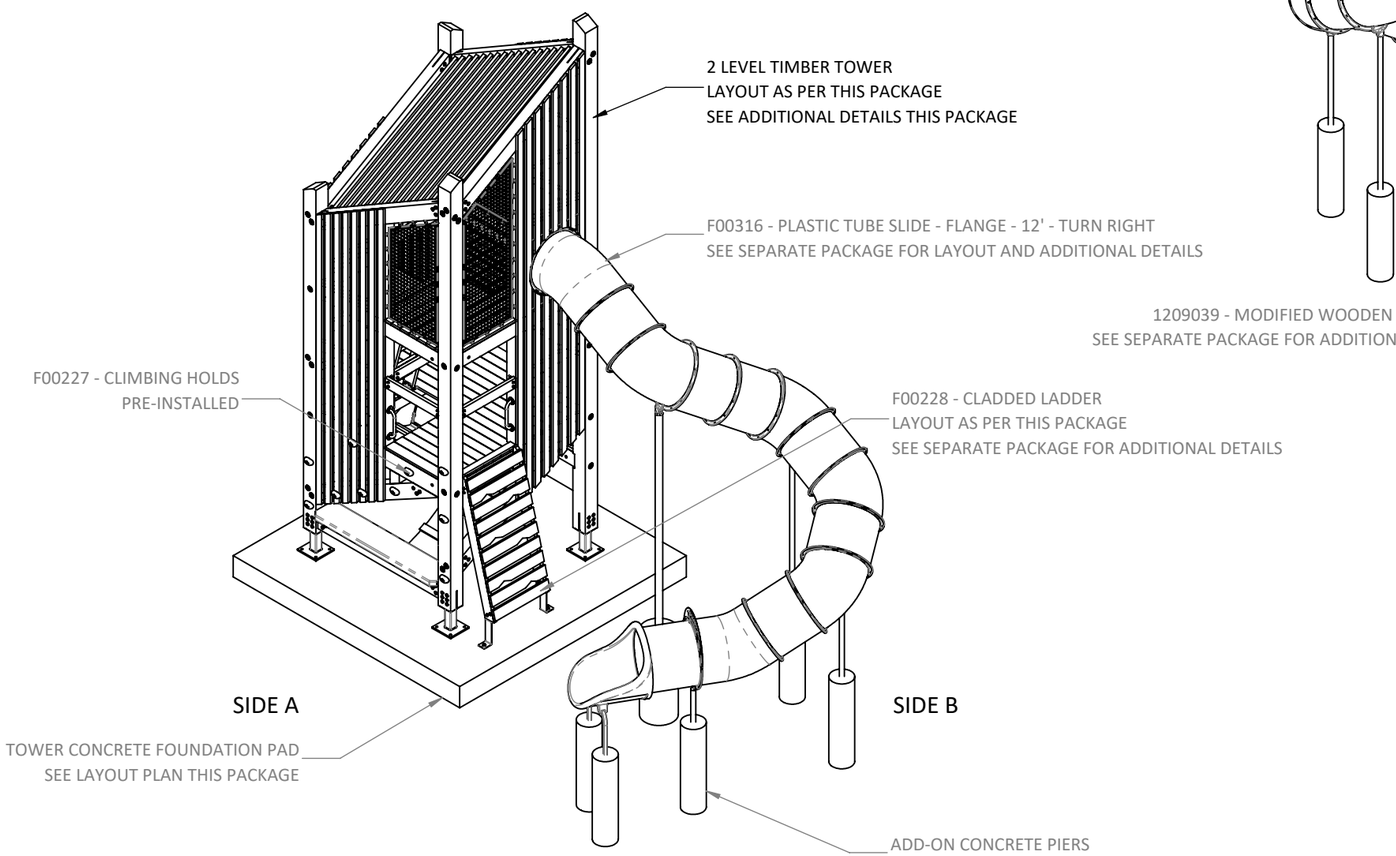

FRONT ISOMETRIC VIEW

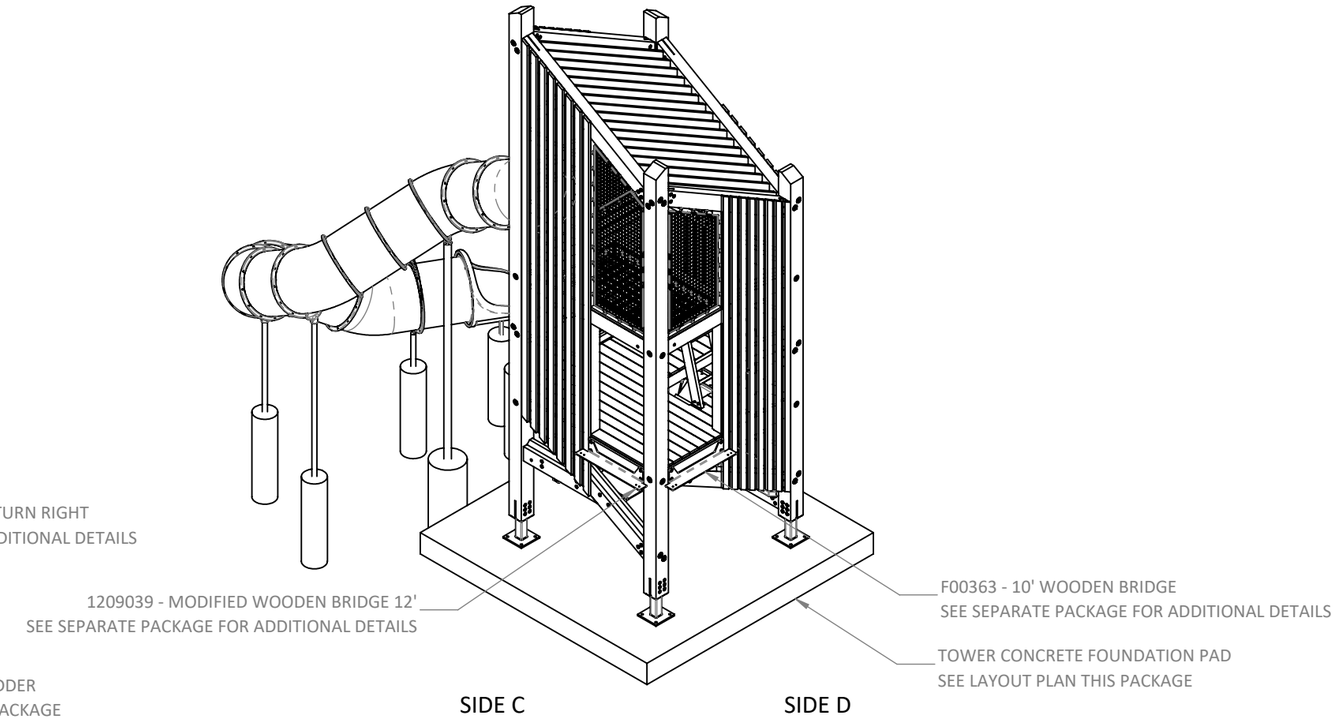

FRONT ISOMETRIC VIEW

PROPERTY OF EARTHSCAPE PLAY INC. - DO NOT COPY. DO NOT DISTRIBUTE.

FINISHED PRODUCT - PLAN VIEW

REAR

WHAT THE FINISHED PRODUCT LOOKS LIKE

See note on the Finished Product - Front Isometric sheet

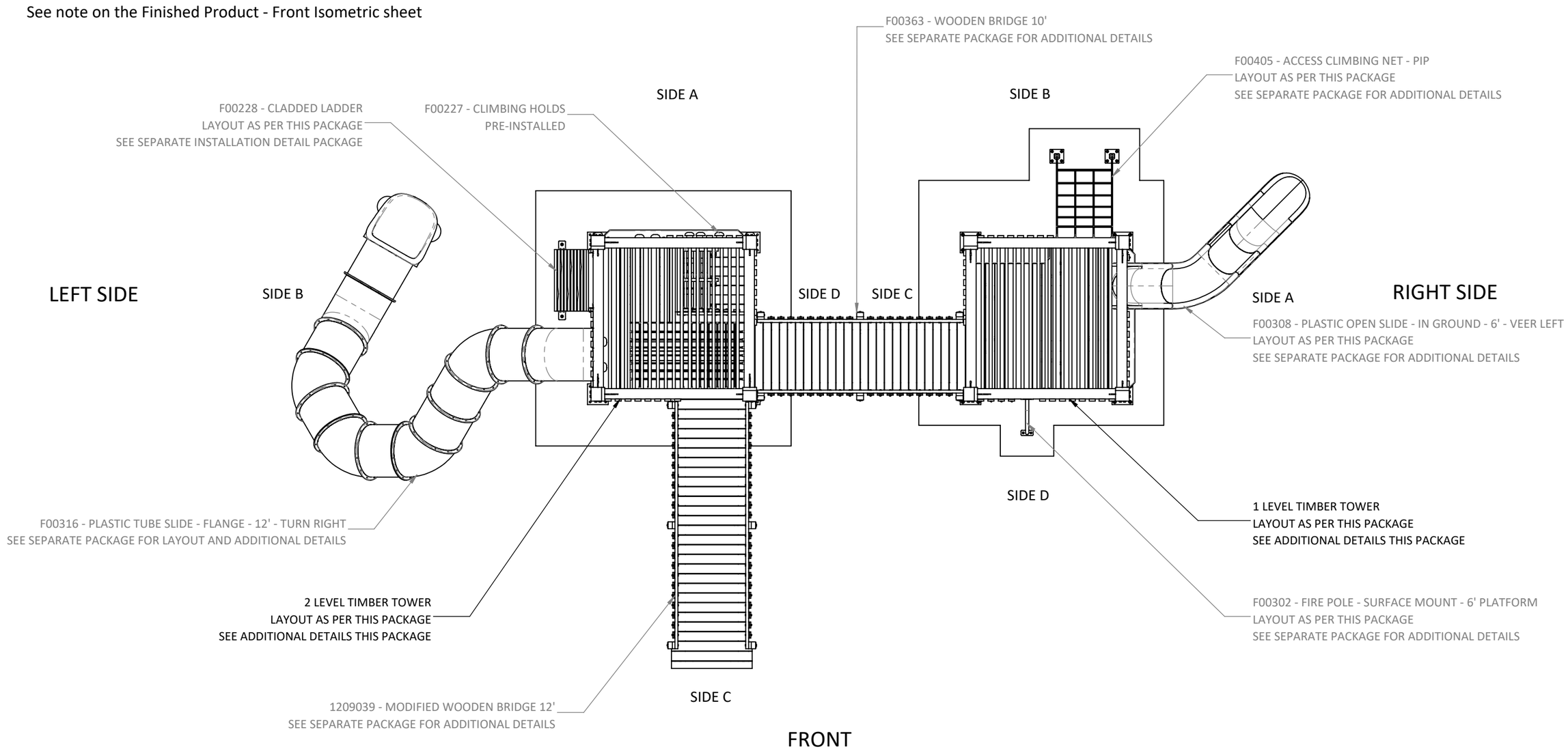

FRONT

PROPERTY OF EARTHSCAPE PLAY INC. - DO NOT COPY. DO NOT DISTRIBUTE.

WHAT THE FINISHED PRODUCT LOOKS LIKE

See note on the Finished Product - Front Isometric sheet

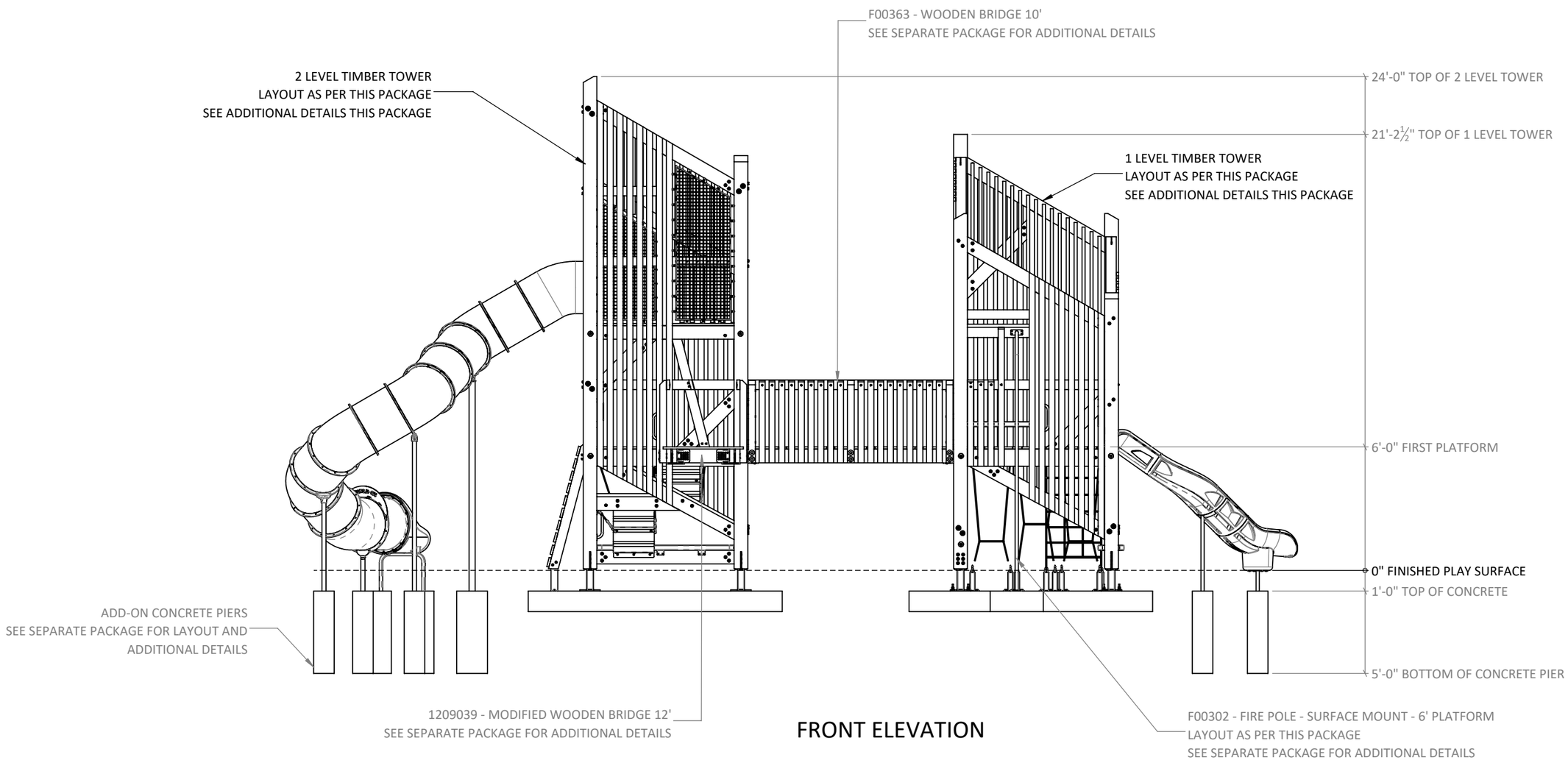

FRONT ELEVATION

PROPERTY OF EARTHSCAPE PLAY INC. - DO NOT COPY. DO NOT DISTRIBUTE.

FINISHED PRODUCT - ELEVATIONS 2 OF 4

WHAT THE FINISHED PRODUCT LOOKS LIKE

See note on the Finished Product - Front Isometric sheet

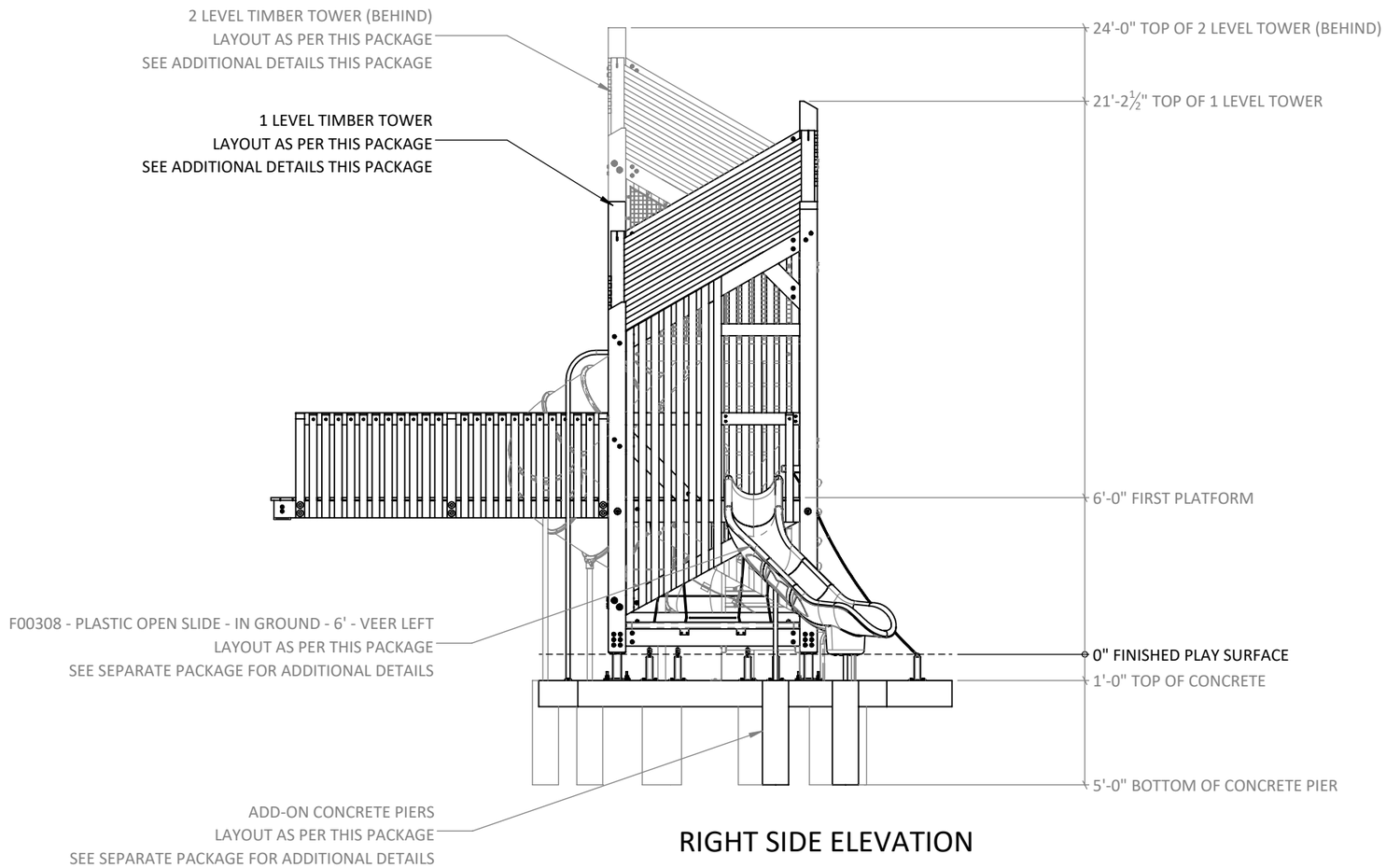

RIGHT SIDE ELEVATION

PROPERTY OF EARTHSCAPE PLAY INC. - DO NOT COPY. DO NOT DISTRIBUTE.

WHAT THE FINISHED PRODUCT LOOKS LIKE

See note on the Finished Product - Front Isometric sheet

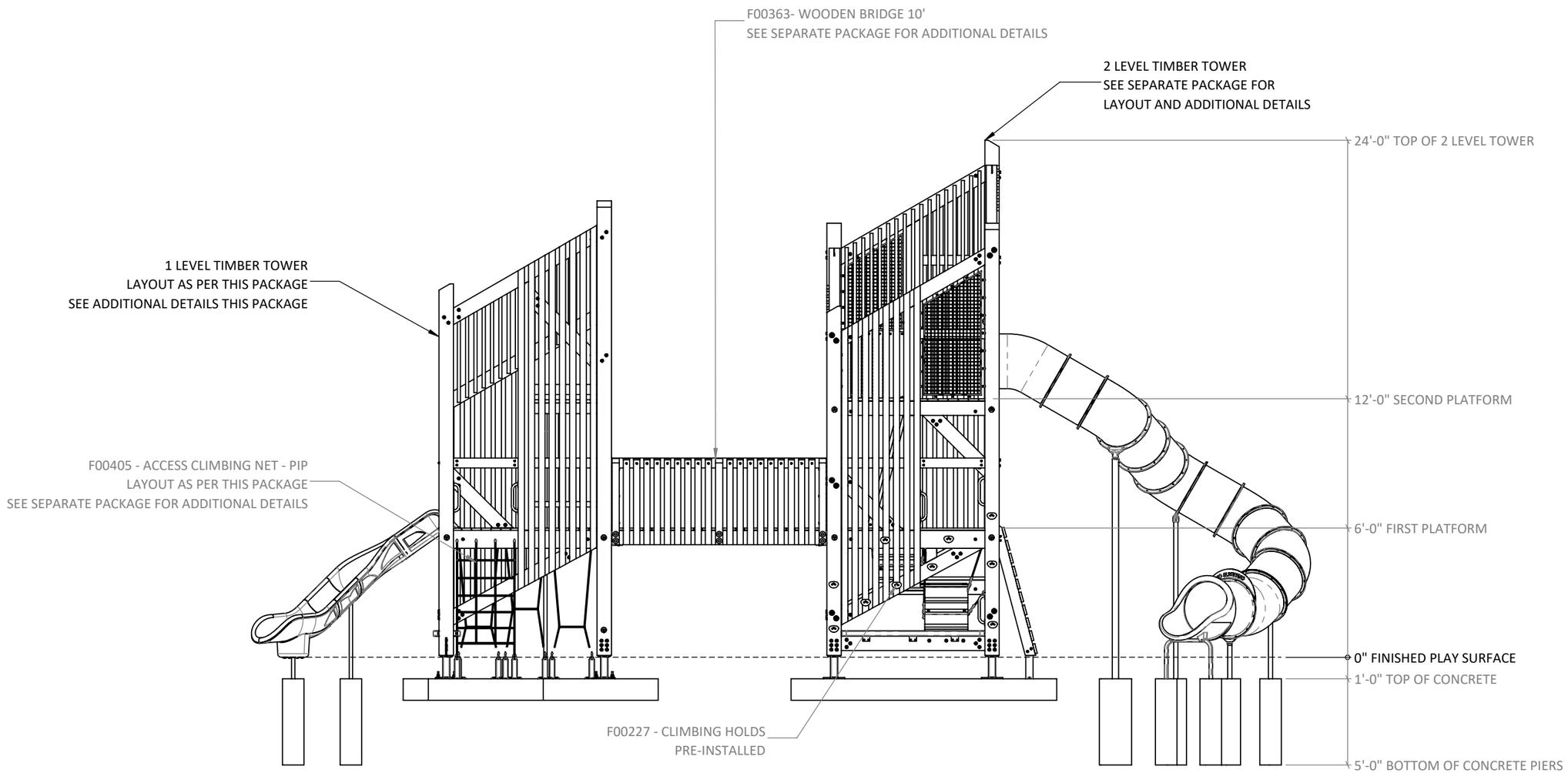

REAR ELEVATION

PROPERTY OF EARTHSCAPE PLAY INC. - DO NOT COPY. DO NOT DISTRIBUTE.

FINISHED PRODUCT - ELEVATIONS 4 OF 4

WHAT THE FINISHED PRODUCT LOOKS LIKE

See note on the Finished Product - Isometrics sheet

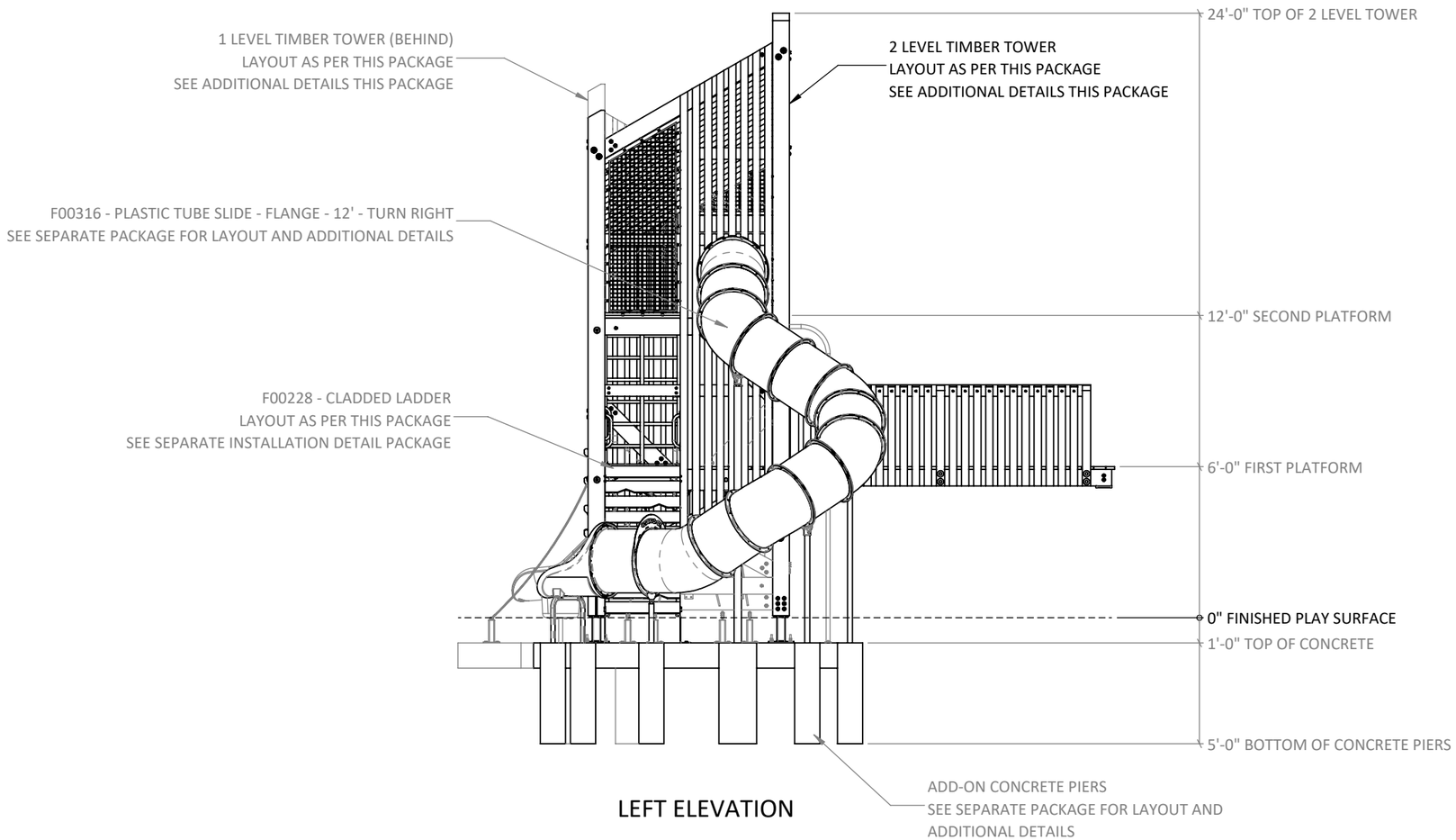

LEFT ELEVATION

PROPERTY OF EARTHSCAPE PLAY INC. - DO NOT COPY. DO NOT DISTRIBUTE.

LOCATE PLAY EQUIPMENT AND POUR TOWER PAD

STEP 1 - LOCATING THE EQUIPMENT ON SITE

Layout and mark the location of the equipment Reference Points (R.P.) on your site. Reference Points are taken from the outside corners of the tower base brackets. Refer to 1209039 - Modified Timber Bridge 12' to ensure the concrete is positioned with respect to the abutment for the bridge. The location of these points relative to the site is not within the scope of these instructions and should be provided by others.

Ensure you know what the designed elevation is for the finished safety surface. All heights provided in these instructions will be relative to the finished play surface. The finished surface elevation is not within the scope of these instructions and should be provided by others.

STEP 2 - LAYOUT CONCRETE PAD

Layout and mark the outer edge of concrete pad based off the Reference Points. Refer to Foundation Plan this sheet for details

Top of concrete is 305mm [12"] below finished play surface.

STEP 3 - EXCAVATE FOR CONCRETE PAD

Excavate area and prep as per Concrete Placement Detail SD-001B at the back of this package.

The foundation detail provided in these instructions has been developed assuming typical soil conditions specified in general notes. If the subgrade encountered does not meet these conditions, the subgrade must be improved or revisions made to this detail. Revisions to the detail are the responsibility of the installer and it is strongly recommended any changes be reviewed and approved by a registered engineer.

STEP 4 - POUR CONCRETE PAD

Form and pour timber tower concrete pads as per Foundation Plan this sheet and Concrete Placement Detail SD-001B on this sheet.

Allow concrete to cure prior to proceeding to Step 5.

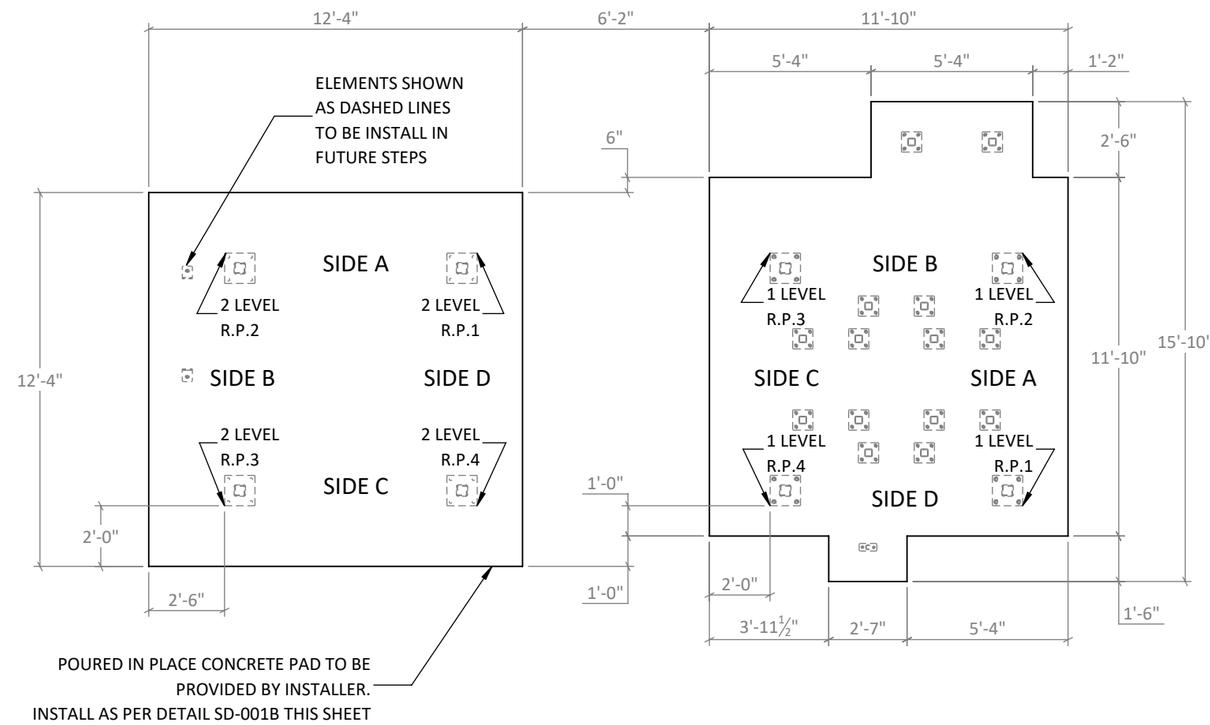

FOUNDATION PLAN

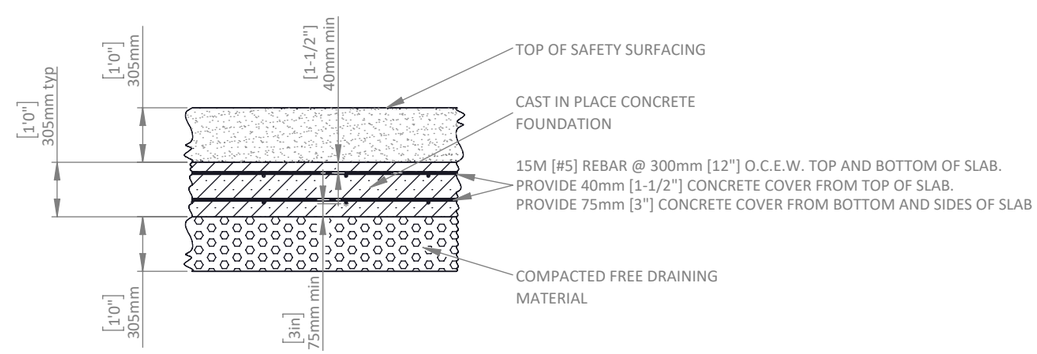

FOUNDATION NOTES:

1. TOP OF CONCRETE TO BE SET AT 300mm [12"] BELOW TOP OF SURFACING UNO.
2. SLAB TO BEAR ON MATERIAL BELOW THE FROST DEPTH, OR ALTERNATIVELY ON 300mm [12"] OF FREE DRAINING NON FROST SUSCEPTIBLE SOILS, COMPACTED TO 98% SPDD.

CONCRETE PLACEMENT DETAIL SD-001B

PROPERTY OF EARTHSCAPE PLAY INC. - DO NOT COPY. DO NOT DISTRIBUTE.

POSITION 2 LEVEL TIMBER TOWER

STEP 5 - POSITION TOWER

Layout and mark the location of the equipment Reference Points (R.P.) on the cured concrete pad as per this sheet.

Position the 2 Level Timber Tower on the foundation pad aligning it to the site reference points. Reference Points align with the outside corners of the tower base brackets. Refer to 1209039 - Modified Timber Bridge 12' to ensure the tower is centered with the concrete abutment for the bridge.

STEP 6 - INSTALL 12' MODIFIED WOODEN BRIDGE TO ABUTMENT

Install 1209039 - Modified Wooden Bridge 12' as per separate installation package. End of the bridge to secure to a concrete abutment provided by the installer

DO NOT ANCHOR TOWER TO THE FOUNDATION AT THIS TIME.

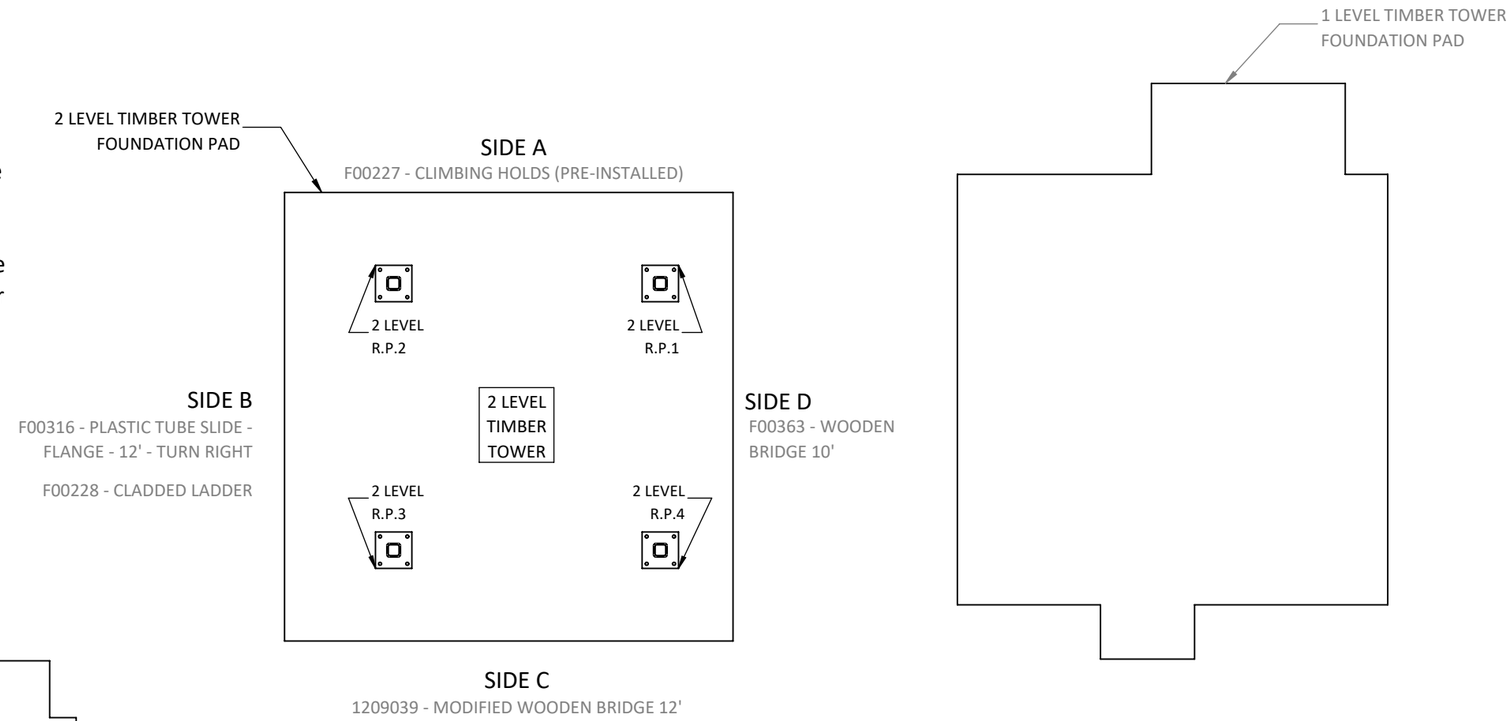

2 LEVEL TIMBER TOWER LAYOUT

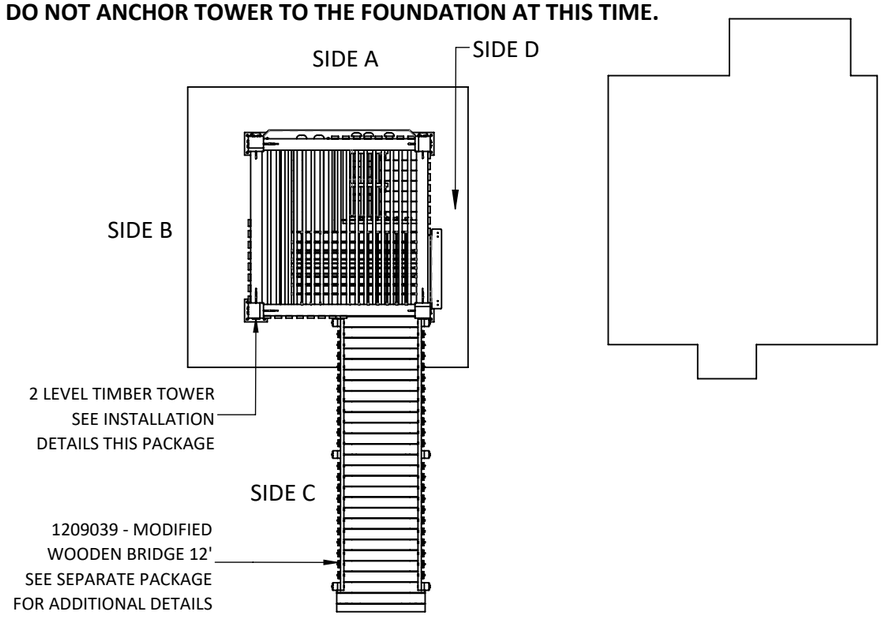

TOWER AT THE END OF STEP 6

PROPERTY OF EARTHSCAPE PLAY INC. - DO NOT COPY. DO NOT DISTRIBUTE.

STEP 7 - POSITION 1 LEVEL TOWER

Position the 1 Level Timber Tower on the foundation pad aligning it to the 2 Level Timber Tower as per the Layout this sheet.

STEP 8 - INSTALL 10' WOODEN BRIDGE

Install F00363 - Wooden Bridge 10' as per the separate installation package.

DO NOT ANCHOR TOWER TO THE FOUNDATION AT THIS TIME.

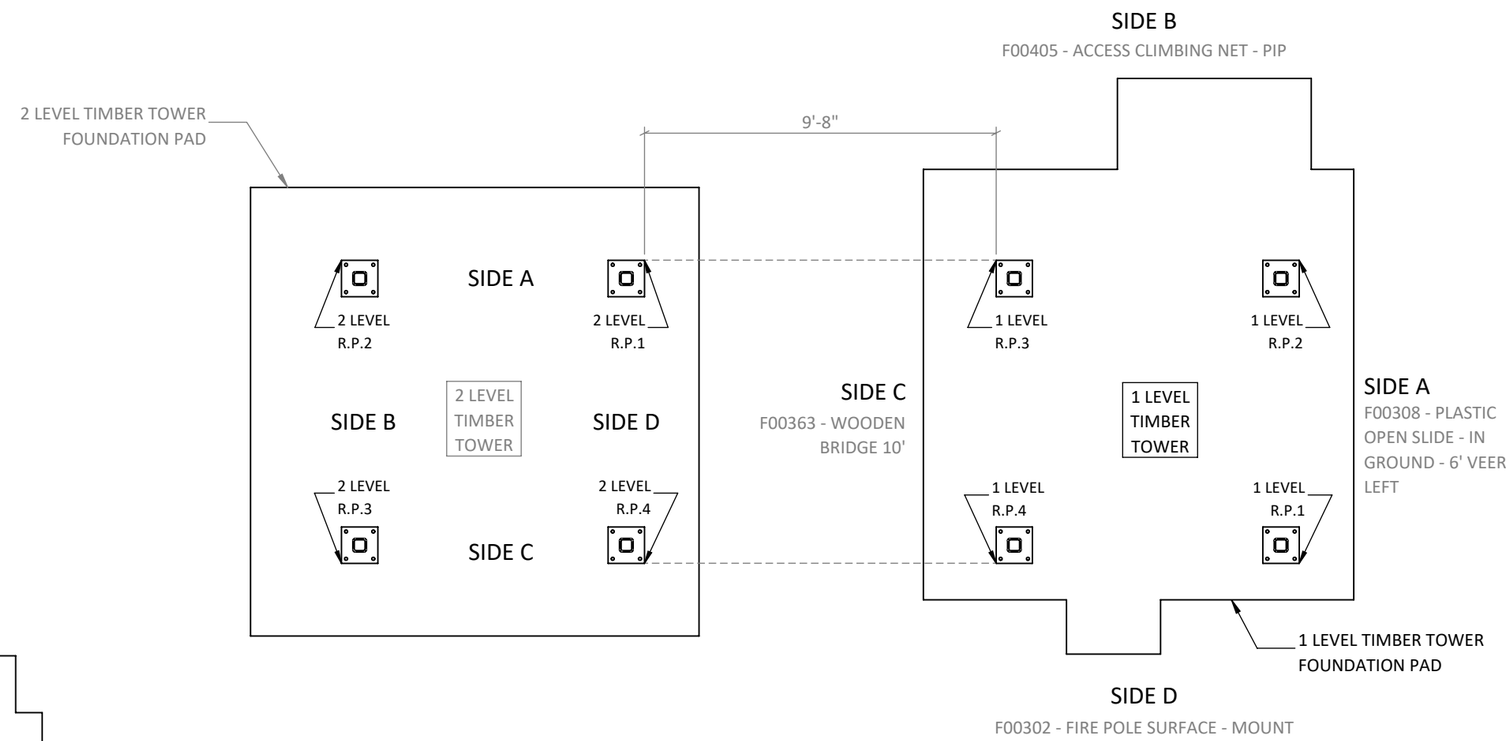

1 LEVEL TIMBER TOWER LAYOUT

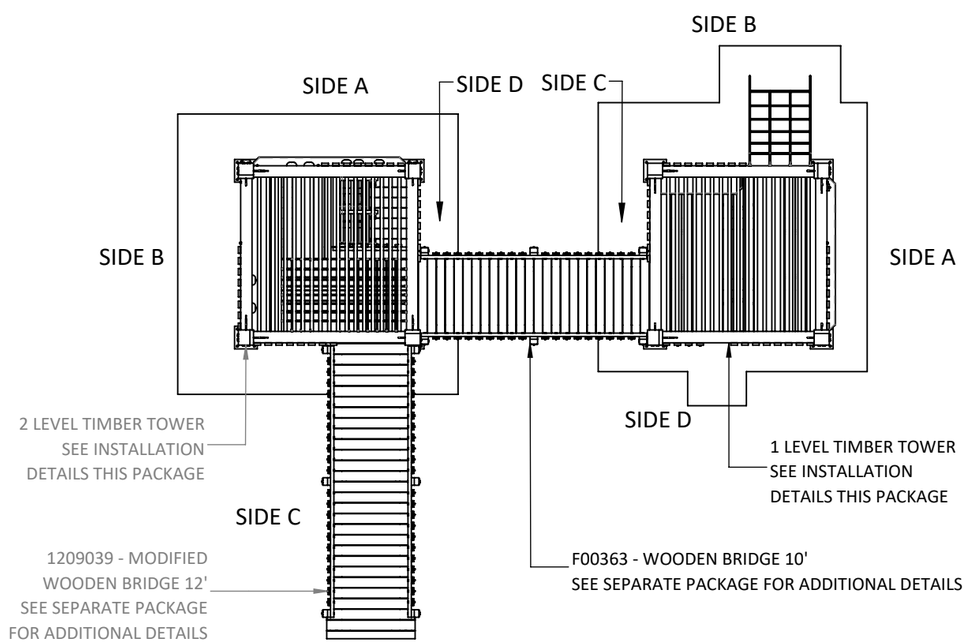

TOWER AT THE END OF STEP 8

PROPERTY OF EARTHSCAPE PLAY INC. - DO NOT COPY. DO NOT DISTRIBUTE.

STEP 9 - SECURE TOWERS TO FOUNDATION PAD

Secure both Timber Tower post base brackets to the concrete foundation pad as per SD-002B on this sheet.

Ensure excess threaded rod cut and ground after installation complete as noted on detail.

Anchoring of threaded rod with epoxy to be completed as per epoxy manufacturer's instructions.

MAINTAIN A MINIMUM ANCHOR ROD EDGE DISTANCE OF 100mm [4"].

HARDWARE REFERENCE LIST (PER CONNECTION)

ITEM NO.	PARTNO	DESCRIPTION	QTY.
1	H20019	Threaded Stud 3/4"-10 x 12" SS	4
2	H30047V	WASHER 3/4" X 1-3/4" SS	4
3	H40015	HEX NUT 3/4-10 SS	8

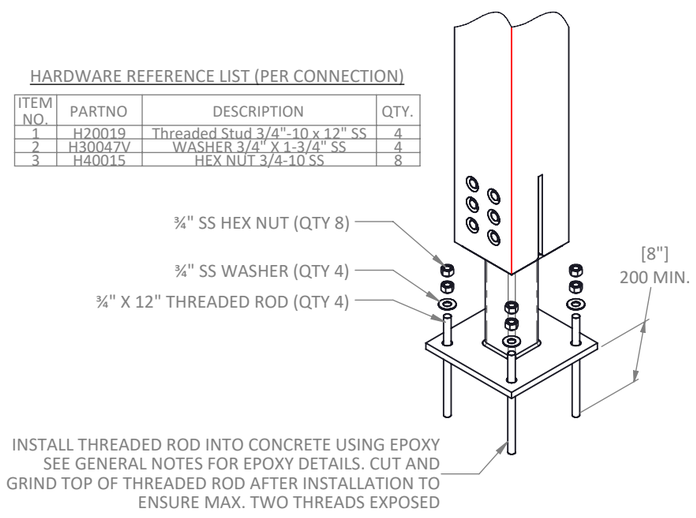

SD-002B

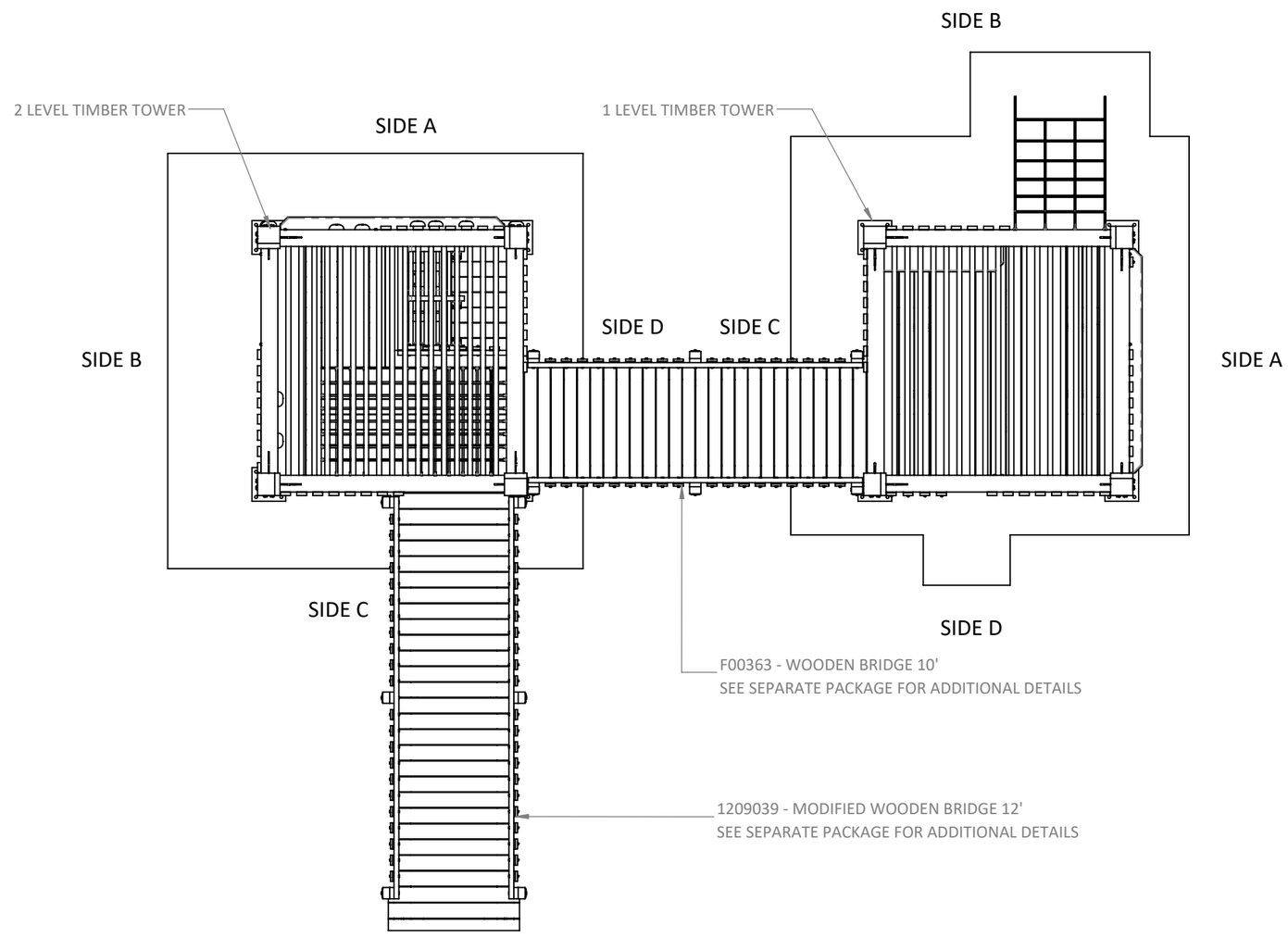

TOWER AT THE END OF STEP 9

PROPERTY OF EARTHSCAPE PLAY INC. - DO NOT COPY. DO NOT DISTRIBUTE.

STEP 10 - LOCATE AND INSTALL ADD-ONS

Refer to the layout drawing on this sheet to locate the add-ons relative to the timber towers.

Anchoring and other details relating to installation of the add-ons to be found in their separate installation packages.

1 LEVEL TIMBER TOWER ADD-ONS
F00302 - FILE POLE - SURFACE MOUNT - 6' PLATFORM
F00308 - PLASTIC OPEN SLIDE - IN GROUND - 6' - VEER LEFT
F00403 - SLING SEATS - PIP
F00405 - ACCESS CLIMBING NET - PIP

2 LEVEL TIMBER TOWER ADD-ONS
F00228 - CLADDED LADDER
F00316 - PLASTIC TUBE SLIDE - FLANGE - 12' - TURN RIGHT

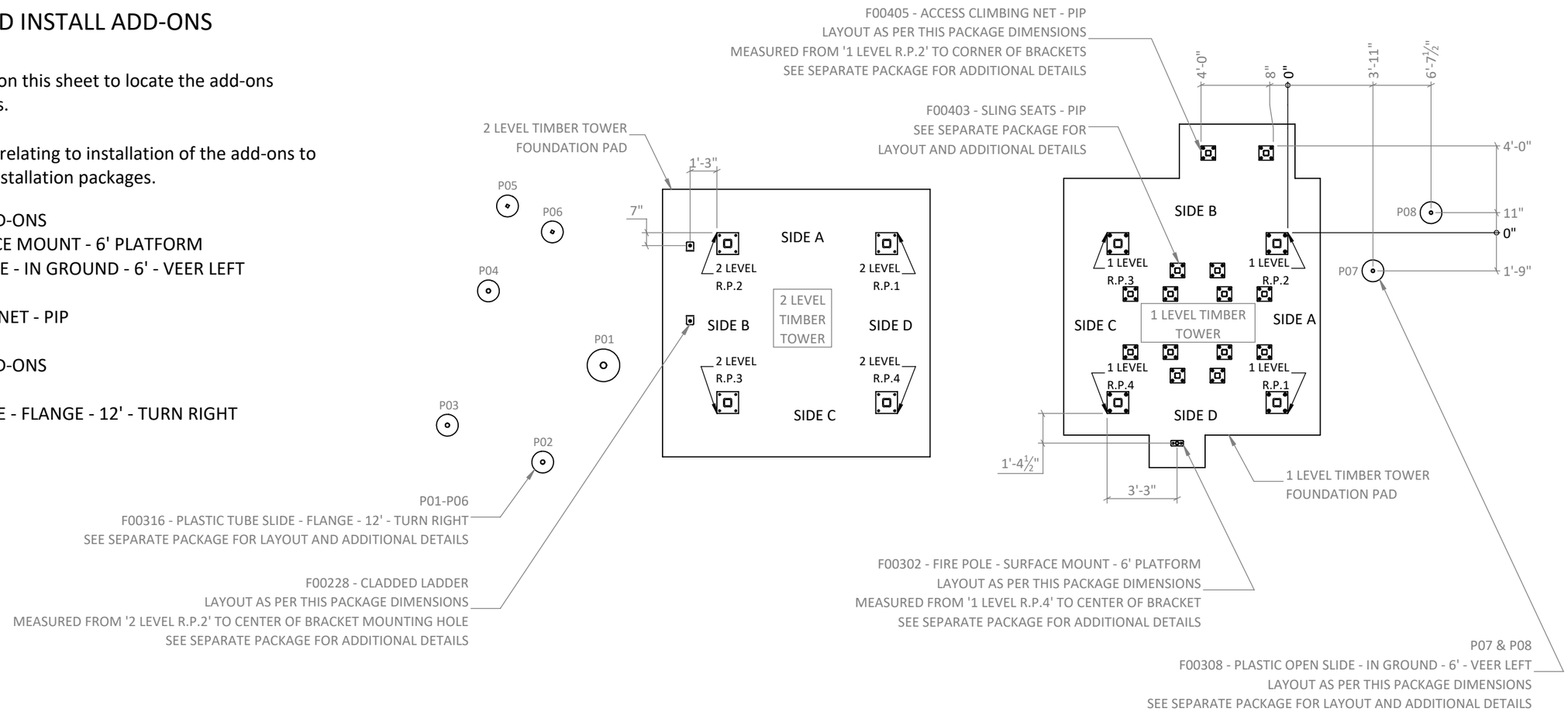

TOWER ADD-ON LAYOUT PLAN

PIER LAYOUT TABLE							
PIER I.D.	ADD-ON	PIER DIAMETER	PIER DEPTH	RAY FROM 1 LEVEL R.P.1	RAY FROM 1 LEVEL R.P.2	RAY FROM 1 LEVEL R.P.3	RAY FROM 1 LEVEL R.P.4
P07	F00308	∅1'-0"	5'-0"	7'-8"	4'-3½"	-	-
P08	F00308	∅1'-0"	5'-0"	11'-4½"	6'-8"	-	-

PROPERTY OF EARTHSCAPE PLAY INC. - DO NOT COPY. DO NOT DISTRIBUTE.

GENERAL NOTES

COMBINED ASSEMBLY

FOR CANADIAN INSTALLATION SITES USE THESE NOTES

GENERAL NOTES

1. THIS DRAWING IS THE PROPERTY OF EARTHSCAPE. DO NOT COPY OR DISTRIBUTE WITHOUT PERMISSION.
2. EARTHSCAPE RESERVES OWNERSHIP OF ALL DRAWINGS, SPECIFICATIONS, AND OTHER DOCUMENTS, INCLUDING THOSE IN ELECTRONIC FORM, AUTHORED BY EARTHSCAPE. UPON SIGNING CONTRACT, EARTHSCAPE GRANTS THE OWNER LIMITED LICENSE TO USE THE INSTRUMENTS OF SERVICE SOLELY FOR USING AND MAINTAINING, OR ADDING TO THE PROJECT
3. ENGINEERING AND STRUCTURAL REVIEW: EARTHSCAPE PROVIDES STAMPED DRAWINGS AND/OR STRUCTURAL LOAD TESTING FOR ONTARIO, AS REQUIRED BY CSA Z614. LOCAL ENGINEERING APPROVAL FOR JURISDICTIONS OUTSIDE ONTARIO, IF REQUIRED, TO BE PROVIDED BY OTHERS.
4. EARTHSCAPE DESIGNS AND ENGINEERS FOR A FROST PENETRATION DEPTH OF 1200mm. SLAB ON GRADE CONSTRUCTION IS SUBJECT TO FROST MOVEMENTS. FREE DRAINING SOIL UNDER THE FOOTING IS USED TO MINIMIZE FROST EFFECTS. OVERALL TOWER/SLAB MOVEMENT MAY OCCUR.
5. INSPECTION AND TESTING: INSPECTION, TESTING (INCLUDING CONCRETE TESTING), PRE-CONSTRUCTION SURVEYS TO BE COMPLETED BY OTHERS.
6. SURFACING: WHEN AN IMPACT-ABSORBING SURFACE MATERIAL IS REQUIRED, IT MUST COMPLY WITH CSA Z614 (MOST RECENT EDITION) FOR THE DEFINED FALL HEIGHT OF THE EQUIPMENT SPECIFIED IN DRAWINGS BY EARTHSCAPE OR A CONTRACTUALLY OBLIGATED CRITICAL HEIGHT SPECIFIED IN ADVANCE. ENSURE USE ZONES, SAFETY ZONES, AND/OR PROTECTIVE SURFACING ZONES AROUND ALL PLAY EQUIPMENT ARE COMPLIANT WITH CSA Z614 (MOST RECENT EDITION) - BY OTHERS.
7. SURVEY AND FACILITIES: SURVEY WORK INCLUDING BENCHMARKS, LINES AND LEVELS, PRE-CONSTRUCTION SURVEY, AS-BUILT DRAWINGS BY OTHERS
8. THESE DRAWINGS ARE INTENDED TO BE PRINTED AT 11" X 17" PAGE SIZE. DO NOT SCALE
9. ALL MEASUREMENTS ARE IN METRES (m) UNLESS OTHERWISE STATED
10. EQUIPMENT SHALL COMPLY WITH THE REQUIREMENTS OF CAN/CSA-Z614 (MOST RECENT EDITION) "CHILDREN'S PLAYSPACES AND EQUIPMENT"
11. VISUAL DETAILS INCLUDING BUT NOT LIMITED TO: NET SPACING, ROPE APPEARANCE AND COLOURS ARE FOR CONCEPTUAL PURPOSES ONLY
12. ALWAYS WEAR PROPER PPE AND FOLLOW SAFE PRACTICES.
13. ALL WORK SHALL BE COMPLETED IN ACCORDANCE WITH THE OCCUPATIONAL HEALTH AND SAFETY ACT.
14. CONTRACTOR IS RESPONSIBLE FOR CONFIRMING ALL SITE CONDITIONS AND REPORTING DISCREPANCIES TO EARTHSCAPE IMMEDIATELY.
15. EARTHSCAPE IS NOT RESPONSIBLE FOR THIRD PARTY USE OF THESE DRAWINGS

FASTENERS:

1. METRIC/IMPERIAL DIAMETER CONVERSIONS OF TYPICAL SIZES:
   1. 8mm=5/16", 10mm=3/8", 12mm=1/2", 25mm=1"
   2. ROUND UP TO NEAREST STANDARD LENGTH FOR MANUFACTURER
2. ALL FASTENERS ARE TO BE STAINLESS STEEL (UNLESS OTHERWISE NOTED)
3. ALL BOLT HOLES SHALL BE PRE-DRILLED AND SHALL BE NOT LESS THAN 1mm AND NOT GREATER THAN 2mm LARGER THAN THE NOMINAL HOLE DIAMETER
4. FOR PARTIALLY THREADED SCREWS, EMBED FULL THREAD INTO SECONDARY MEMBER OR TO A DEPTH AS SPECIFIED ON DRAWINGS.
5. WHERE PRE-DRILLING OF SCREWS IS RECOMMENDED BY THE SCREW MANUFACTURER, HOLE DIAMETER TO BE STRICTLY AS PER MANUFACTURER'S INSTRUCTIONS.
6. DO NOT USE IMPACT DRILLS FOR SCREW INSTALLATION.
7. DO NOT USE A HAMMER TO ENGAGE THE FASTENER WITH THE WOOD.
8. ALL FASTENERS TO BE INSTALLED AS POSITIONED ON DRAWINGS.
9. ALL BOLTED CONNECTIONS ARE TO BE SECURED USING VIBRA-TITE "VC-3" THREAD-LOCKING FLUID OR EQUIVALENT

EXCAVATION AND BACKFILL

1. STRIP ALL TOP SOIL, PAVING, AND DELETERIOUS MATERIAL FROM UNDER FOOTINGS.
2. LOCATE ALL SERVICES PRIOR TO COMPLETING EXCAVATION.
3. ALL FOOTINGS SHALL BE PLACED AT A MINIMUM OF 1200mm BELOW GRADE UNLESS OTHERWISE NOTED ON THE DRAWINGS.
4. SUPPORTING SUBGRADE AND FILL TO HAVE A MINIMUM BEARING CAPACITY OF 150 kPa.
5. ALL FOOTINGS AND SLABS TO BE PLACED ON EITHER NATIVE GRAVEL/SAND/CLAY OR 150mm OF GRANULAR A COMPACTED TO A MINIMUM STANDARD PROCTOR DRY DENSITY OF 98%.
6. BENEATH 150mm TOP LAYER OF COMPACTED GRANULAR A, GRANULAR B FILL CAN BE USED AS REQUIRED PLACED IN MAXIMUM 200mm LIFTS, COMPACTED TO A STANDARD PROCTOR DRY DENSITY OF 96%.
7. CONTRACTOR IS RESPONSIBLE FOR SUPPORT OF EXCAVATIONS DURING CONSTRUCTION AS REQUIRED.

CONCRETE

1. ALL CONCRETE WORK AND MATERIALS SHALL BE IN ACCORDANCE WITH CAN/CSA A23.1/2
2. ALL REINFORCING STEEL TO BE IN ACCORDANCE WITH CAN/CSA A23.1/2 INCLUDING FABRICATION, DETAILING, LAP SPLICES, PLACEMENT, FIXING AND COVER.
3. REINFORCING STEEL SHALL COMPLY WITH CAN/CSA G40.18
4. DO NOT ADD WATER TO CONCRETE ONSITE.
5. ENSURE A MINIMUM COVER OF 75mm TO THE GROUND IN ALL BELOW GRADE CONCRETE.
6. CONCRETE MATERIAL TO BE:
   1. FOOTINGS: CLASS F-2 CONCRETE WITH A MINIMUM 28 DAY COMPRESSIVE STRENGTH OF 25 MPa, MAXIMUM WATER/CEMENT RATIO OF 0.55, MAXIMUM COARSE AGGREGATE SIZE OF 20mm, 4-7% AIR CONTENT, AND A MAXIMUM SLUMP OF 50-100mm.
   2. SLAB ON GRADE: CLASS C-2 CONCRETE WITH A MINIMUM 28 DAY COMPRESSIVE STRENGTH OF 32 MPa, MAXIMUM WATER/CEMENT RATIO OF 0.45, MAXIMUM COARSE AGGREGATE SIZE OF 20mm, 5-8% AIR CONTENT AND A MAXIMUM SLUMP OF 50-100mm.
7. CONCRETE REINFORCING TO DEFORMED MINIMUM YIELD STRENGTH OF 400 MPa
8. PIT RUN GRAVEL WILL NOT BE ACCEPTABLE.
9. ALL REINFORCING CHAIRS SHALL BE PLASTIC
10. ALL FORM OIL TO BE NON-STAINING MINERAL OIL, FREE OF KEROSENE.
11. WELDED WIRE MESH SHALL BE IN ACCORDANCE WITH ASTM A1064.
12. VIBRATE ALL CONCRETE TO ENSURE THAT CONCRETE IS FREE FROM VOIDS AND OTHER DEFECTS.
13. MOIST CURE ALL CONCRETE 7 DAYS.
14. IN HOT OR COLD WEATHER CONDITIONS TAKE ADDITIONAL PRECAUTIONS AS PER CAN/CSA A23.1/2.
15. UNLESS NOTED OTHERWISE, FASTEN ALL HARDWARE TO CONCRETE USING EITHER:
    1. SIMPSON STRONG TIE "TITEN HD" Ø½ X 5" SS CONCRETE SCREW
    2. THREADED ROD WITH SIMPSON STRONG TIE "SET 3G" OR HILTI "HY-200" EPOXY.
    3. REFER TO RESPECTIVE MANUFACTURER's INSTRUCTIONS FOR INSTALLATION PROCEDURE

FOR U.S. INSTALLATION SITES USE THESE NOTES

GENERAL NOTES

1. THIS DRAWING IS THE PROPERTY OF EARTHSCAPE. DO NOT COPY OR DISTRIBUTE WITHOUT PERMISSION.
2. EARTHSCAPE RESERVES OWNERSHIP OF ALL DRAWINGS, SPECIFICATIONS, AND OTHER DOCUMENTS, INCLUDING THOSE IN ELECTRONIC FORM, AUTHORED BY EARTHSCAPE. UPON SIGNING CONTRACT, EARTHSCAPE GRANTS THE OWNER LIMITED LICENSE TO USE THE INSTRUMENTS OF SERVICE SOLELY FOR USING AND MAINTAINING, OR ADDING TO THE PROJECT
3. ENGINEERING AND STRUCTURAL REVIEW: EARTHSCAPE PROVIDES STAMPED DRAWINGS AND/OR STRUCTURAL LOAD TESTING FOR ONTARIO, AS REQUIRED BY ASTM F-1487-17. LOCAL ENGINEERING APPROVAL FOR JURISDICTIONS OUTSIDE ONTARIO, IF REQUIRED, TO BE PROVIDED BY OTHERS.
4. EARTHSCAPE DESIGNS AND ENGINEERS FOR A FROST PENETRATION DEPTH OF 48". SLAB ON GRADE CONSTRUCTION IS SUBJECT TO FROST MOVEMENTS. FREE DRAINING SOIL UNDER THE FOOTING IS USED TO MINIMIZE FROST EFFECTS. OVERALL TOWER/SLAB MOVEMENT MAY OCCUR.
5. INSPECTION AND TESTING: INSPECTION, TESTING (INCLUDING CONCRETE TESTING), PRE-CONSTRUCTION SURVEYS TO BE COMPLETED BY OTHERS.
6. SURFACING: WHEN AN IMPACT-ABSORBING SURFACE MATERIAL IS REQUIRED, IT MUST COMPLY WITH ASTM F-1292 (MOST RECENT EDITION) FOR THE DEFINED FALL HEIGHT OF THE EQUIPMENT SPECIFIED IN DRAWINGS BY EARTHSCAPE OR A CONTRACTUALLY OBLIGATED CRITICAL HEIGHT SPECIFIED IN ADVANCE. ENSURE USE ZONES, SAFETY ZONES, AND/OR PROTECTIVE SURFACING ZONES AROUND ALL PLAY EQUIPMENT ARE COMPLIANT WITH ASTM F-1292 (MOST RECENT EDITION) - BY OTHERS.
7. SURVEY AND FACILITIES: SURVEY WORK INCLUDING BENCHMARKS, LINES AND LEVELS, PRE-CONSTRUCTION SURVEY, AS-BUILT DRAWINGS BY OTHERS
8. THESE DRAWINGS ARE INTENDED TO BE PRINTED AT 11" X 17" PAGE SIZE. DO NOT SCALE
9. ALL MEASUREMENTS ARE IN FEET-INCHES UNLESS OTHERWISE STATED
10. EQUIPMENT SHALL COMPLY WITH THE REQUIREMENTS OF ASTM F1487-17 "STANDARD CONSUMER SAFETY PERFORMANCE SPECIFICATION FOR PLAYGROUND EQUIPMENT"
11. VISUAL DETAILS INCLUDING BUT NOT LIMITED TO: NET SPACING, ROPE APPEARANCE AND COLOURS ARE FOR CONCEPTUAL PURPOSES ONLY
12. ALWAYS WEAR PROPER PPE AND FOLLOW SAFE PRACTICES.
13. ALL WORK SHALL BE COMPLETED IN ACCORDANCE WITH THE OCCUPATIONAL HEALTH AND SAFETY ACT.
14. CONTRACTOR IS RESPONSIBLE FOR CONFIRMING ALL SITE CONDITIONS AND REPORTING DISCREPANCIES TO EARTHSCAPE IMMEDIATELY.
15. EARTHSCAPE IS NOT RESPONSIBLE FOR THIRD PARTY USE OF THESE DRAWINGS

FASTENERS

1. METRIC/IMPERIAL DIAMETER CONVERSIONS:
   1. 8mm=5/16", 10mm=3/8", 12mm=1/2", 25mm=1"
   2. ROUND UP TO NEAREST STANDARD LENGTH FOR MANUFACTURER
2. ALL FASTENERS ARE TO BE STAINLESS STEEL (UNLESS OTHERWISE NOTED)
3. ALL BOLT HOLES SHALL BE PRE-DRILLED AND SHALL BE NOT LESS THAN 3/64" AND NOT GREATER THAN 5/64" LARGER THAN THE NOMINAL HOLE DIAMETER
4. FOR PARTIALLY THREADED SCREWS, EMBED FULL THREAD INTO SECONDARY MEMBER OR TO A DEPTH AS SPECIFIED ON DRAWINGS.
5. WHERE PRE-DRILLING OF SCREWS IS RECOMMENDED BY THE SCREW MANUFACTURER, HOLE DIAMETER TO BE STRICTLY AS PER MANUFACTURER'S RECOMMENDATIONS.
6. DO NOT USE IMPACT DRILLS FOR SCREW INSTALLATION.
7. DO NOT USE A HAMMER TO ENGAGE THE FASTENER WITH THE WOOD.
8. ALL FASTENERS TO BE INSTALLED AS POSITIONED ON SHOP DRAWINGS.
9. ALL BOLTED CONNECTIONS ARE TO BE SECURED USING VIBRA-TITE "VC-3" THREAD-LOCKING FLUID OR EQUIVALENT

EXCAVATION AND BACKFILL

1. STRIP ALL TOP SOIL, PAVING, AND DELETERIOUS MATERIAL FROM UNDER FOOTINGS.
2. LOCATE ALL SERVICES PRIOR TO COMPLETING EXCAVATION.
3. ALL FOOTINGS SHALL BE PLACED AT A MINIMUM OF 4' BELOW GRADE UNLESS OTHERWISE NOTED ON THE DRAWINGS.
4. SUPPORTING SUBGRADE AND FILL TO HAVE A MINIMUM BEARING CAPACITY OF 3000PSF.
5. ALL FOOTINGS AND SLABS TO BE PLACED ON EITHER NATIVE GRAVEL/SAND/CLAY OR 6" OF GRANULAR A COMPACTED TO A MINIMUM STANDARD PROCTOR DRY DENSITY OF 98%.
6. BENEATH 6" TOP LAYER OF COMPACTED GRANULAR A, GRANULAR B FILL CAN BE USED AS REQUIRED PLACED IN MAXIMUM 8" LIFTS, COMPACTED TO A STANDARD PROCTOR DRY DENSITY OF 96%.
7. CONTRACTOR IS RESPONSIBLE FOR SUPPORT OF EXCAVATIONS DURING CONSTRUCTION AS REQUIRED.

CONCRETE

1. ALL CONCRETE WORK AND MATERIALS SHALL BE IN ACCORDANCE WITH ACI-301
2. ALL REINFORCING STEEL TO BE IN ACCORDANCE WITH ASTM A615 AND ACI-301 INCLUDING FABRICATION, DETAILING, LAP SPLICES, PLACEMENT, FIXING AND COVER.
3. REINFORCING STEEL SHALL COMPLY WITH ASTM A615
4. DO NOT ADD WATER TO CONCRETE ONSITE.
5. ENSURE A MINIMUM COVER OF 3" TO THE GROUND IN ALL BELOW GRADE CONCRETE.
6. CONCRETE MATERIAL TO BE:
   1. FOOTINGS AND SLABS: CONCRETE WITH A MINIMUM 28 DAY COMPRESSIVE STRENGTH OF 4000 PSI, MAXIMUM WATER/CEMENT RATIO OF 0.50, MAXIMUM COARSE AGGREGATE SIZE OF 3/4", 4-7% AIR CONTENT (WHERE CONCRETE PLACED ABOVE FROST), AND A MAXIMUM SLUMP OF 2 - 4 INCHES.
7. CONCRETE REINFORCING TO DEFORMED MINIMUM YIELD STRENGTH OF 58000 PSI
8. PIT RUN GRAVEL WILL NOT BE ACCEPTABLE.
9. ALL REINFORCING CHAIRS SHALL BE PLASTIC
10. ALL FORM OIL TO BE NON-STAINING MINERAL OIL, FREE OF KEROSENE.
11. WELDED WIRE MESH SHALL BE IN ACCORDANCE WITH ASTM A1064.
12. VIBRATE ALL CONCRETE TO ENSURE THAT CONCRETE IS FREE FROM VOIDS AND OTHER DEFECTS.
13. MOIST CURE ALL CONCRETE 7 DAYS.
14. IN HOT OR COLD WEATHER CONDITIONS TAKE ADDITIONAL PRECAUTIONS AS PER ACI 305 OR 306 RESPECTIVELY.
15. UNLESS NOTED OTHERWISE, FASTEN ALL HARDWARE TO CONCRETE USING EITHER:
    1. SIMPSON STRONG TIE "TITEN HD" Ø½ X 5" SS CONCRETE SCREW
    2. THREADED ROD WITH SIMPSON STRONG TIE "SET 3G" OR HILTI "HY-200" EPOXY
    3. REFER TO RESPECTIVE MANUFACTURER'S INSTRUCTIONS FOR INSTALLATION PROCEDURE
    4.

PROPERTY OF EARTHSCAPE PLAY INC. - DO NOT COPY. DO NOT DISTRIBUTE.

INSTALLATION INSTRUCTIONS

EARTHSCAPE COLLECTIONS

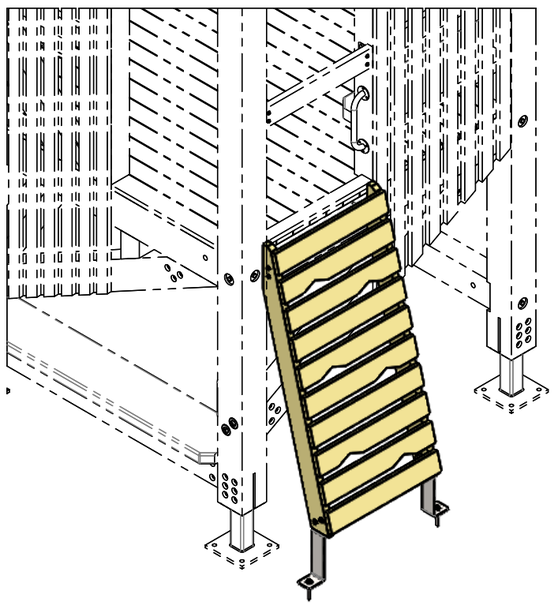

LICENSED PROFESSIONAL ENGINEER
M. JOHNSON
100514620
Sep 22, 2025
PROVINCE OF ONTARIO

WITZEL DYCE
ENGINEERING INC.
PROJECT NO.: 12936-165

CLADDING LADDER

THESE INSTRUCTIONS APPLY TO THE FOLLOWING VERSIONS OF THIS PRODUCT:

F00228 - CLADDING LADDER

WHICH IS DESIGNED TO BE INSTALLED ON THE FOLLOWING PRODUCTS:

1 LEVEL TIMBER TOWER
2 LEVEL TIMBER TOWER
3 LEVEL TIMBER TOWER

NOTE: COLOURS SHOWN ARE REPRESENTATIONAL AND MAY NOT BE THE SAME AS THOSE OF THE SUPPLIED PRODUCT

FOR CSA AND ASTM SPECIFICATIONS AND GENERAL NOTES SEE MAIN STRUCTURE INSTALLATION PACKAGE

PROPERTY OF EARTHSCAPE PLAY INC. - DO NOT COPY. DO NOT DISTRIBUTE.

PLEASE READ ALL INSTRUCTIONS

Before starting to install this equipment be sure to read through and understand these instructions.

If you have any questions, contact your local dealer for assistance before proceeding.

MEASUREMENTS AND STANDARDS

Measurements have been provided in both metres and [feet-inches]. Ensure to follow standards noted for the location in which this play equipment is being installed. Those marked CSA are to be used in Canada and those marked ASTM to be used in the United States.

LIST OF ABBREVIATIONS

AYC = Alaskan Yellow Cedar
WRC = Western Red Cedar
DPS = Designated Play Surface
SS = Stainless Steel
HDG = Hot Dipped Galvanized
WWM = Welded Wire Mesh
TYP = Typical
C/W = Complete With
UNO = Unless Noted Otherwise
EWF = Engineered Wood Fiber
PIP = Poured-In-Place Rubber Surfacing
PT = Pressure Treated

TOOLS SUPPLIED WITH THIS PRODUCT

- No tools supplied

TOOLS THE INSTALLER NEEDS TO SUPPLY

- High torque drill
- 1/2" impact driver
- Set of wood drill bits - up to 1/2"
- Set of impact sockets - up to 1"
- 1/2" ratcheting socket wrench
- T25 drive bit
- T40 drive bit
- Hammer drill
- Concrete drill bit, 1/2" x 8"

EQUIPMENT THE INSTALLER NEEDS TO SUPPLY

- No special equipment required

INSTALLER CREW AND TIME REQUIRED

Number of people needed: 2
Typical total person-hours to install: 2
Time breakdown:

- 1 hours x 2 people to position and anchor the ladder in place

MATERIALS THE INSTALLER NEEDS TO SUPPLY

No additional materails required

WARNINGS

These instructions do not provide specific guidance on the use of tools or the lifting and moving heavy objects. It is assumed that competent people are installing this product who are familiar with using the tools and equipment required and are knowledgeable and skilled at lifting and positioning heavy objects.

PROPERTY OF EARTHSCAPE PLAY INC. - DO NOT COPY. DO NOT DISTRIBUTE.

MAKE SURE YOU HAVE ALL THE PARTS

Examine the equipment and ensure you have all the required parts listed in the table below.

PART IMAGE	ITEM NO.	PART NO.	DESCRIPTION	QTY.
	1	H30059	WASHER 5/8" X 1-1/2" SS	2
	2	H60020	TITEN HD 1/2" X 5" CONCRETE SCREW	2
	3	H16715	WOOD SCREW, WASHER HEAD, M8x80, SS	4
SEE IMAGE THIS SHEET	4		PRE-ASSEMBLED CLADDING LADDER	1

IMAGES OF FASTENERS IN THIS TABLE ARE REPRESENTATIONAL TO HELP IDENTIFY PARTS.

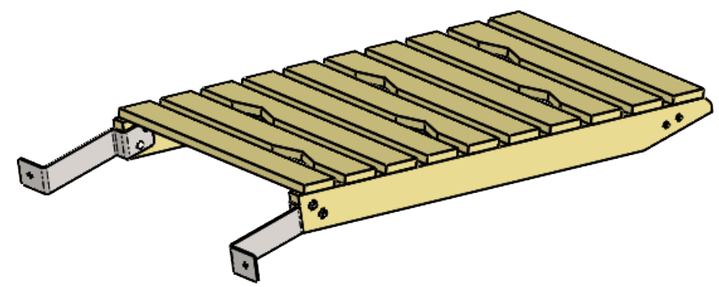

4 PRE-ASSEMBLED CLADDING LADDER

PROPERTY OF EARTHSCAPE PLAY INC. - DO NOT COPY. DO NOT DISTRIBUTE.

CLADDED LADDER INSTALLATION

CLADDING LADDER

STEP 1 - CONFIRM WHERE THE ACCESSORY IS TO BE INSTALLED

Review the complete tower installation package to determine on which side this accessory is to be installed and what the finished product should look like. The images shown on this page are representational and may not match your exact installation.

STEP 2 - POSITION LADDER

Align ladder with correct opening and position so top of ladder is flush with top of grab rail noted in Section A-A this sheet

Bottom of ladder should be located as per dimension noted in Section A-A

STEP 3 - SECURE TOP OF LADDER TO TOWER

You will need to remove the top one or two boards from the ladder to access the attachment brackets. Make sure to save screws and boards to be reinstalled after ladder secured.

Pre-drill holes for screws then screw brackets to timber beam as per Detail B this sheet.

Reinstall removed boards.

STEP 4 - SECURE LADDER BASE BRACKETS TO CONCRETE PAD

Confirm bottom of ladder is still in the correct location as per Step 2, then pre-drill holes in concrete pad and anchor the base bracket to the pad as per Detail C this sheet.

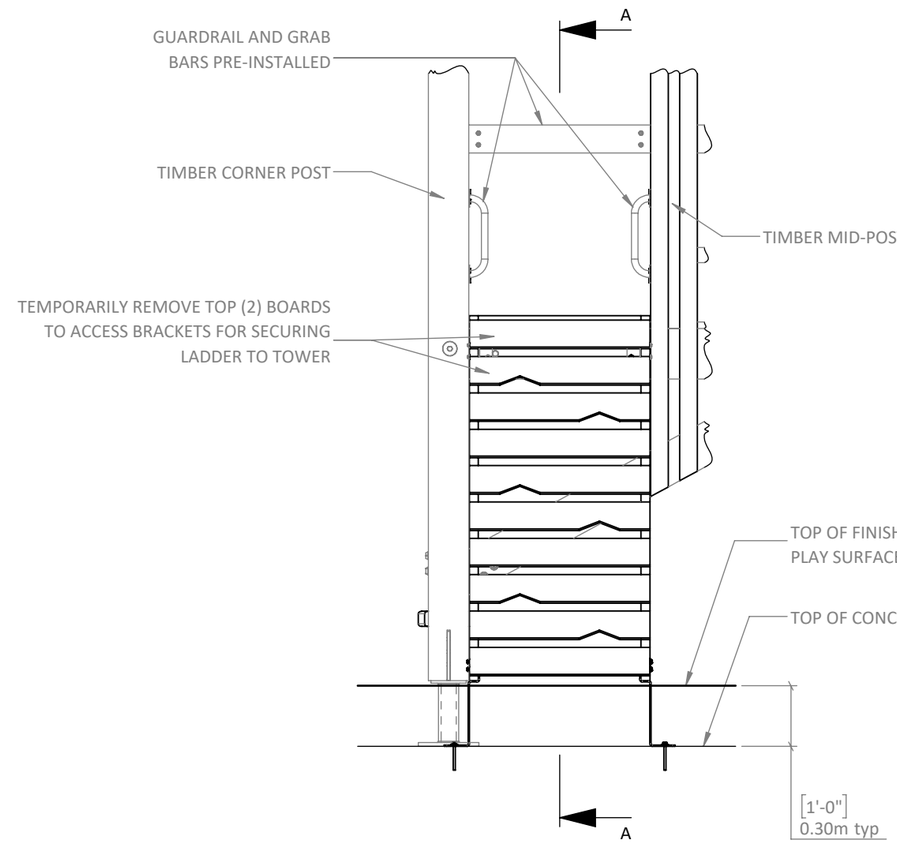

SAMPLE ELEVATION

(ACTUAL INSTALLATION MIGHT BE A MIRRORED VERSION OF THIS VIEW)

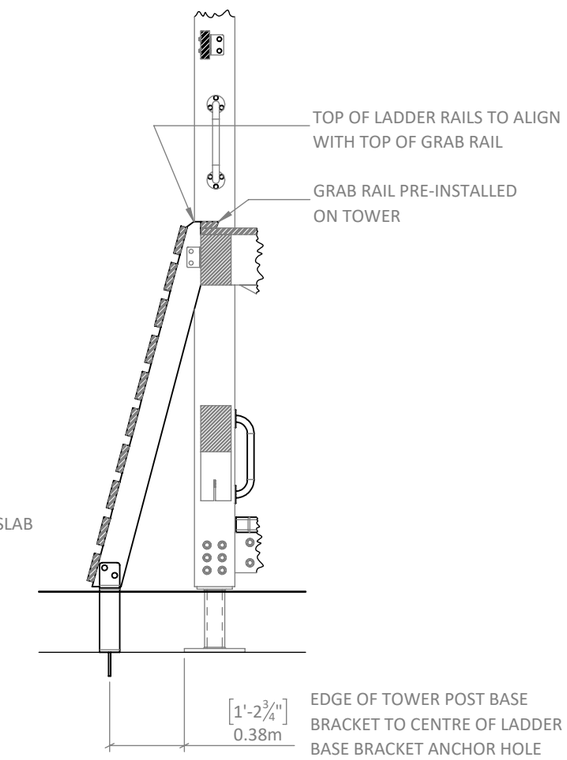

SECTION A-A

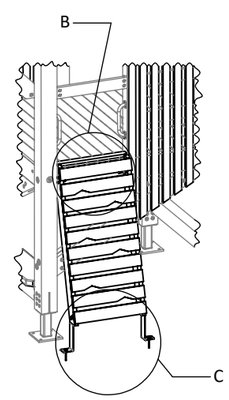

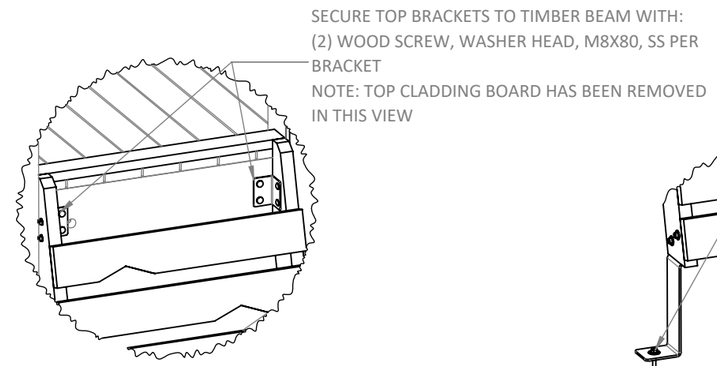

DETAIL B

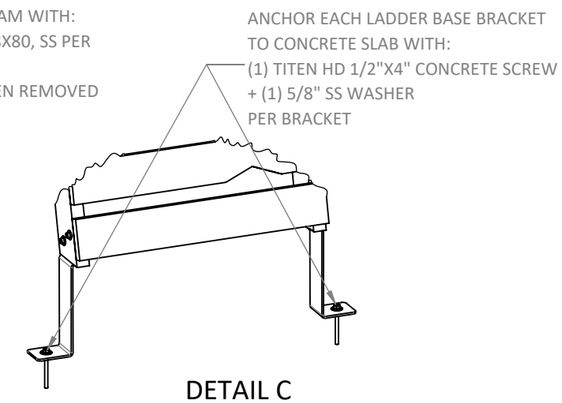

DETAIL C

PROPERTY OF EARTHSCAPE PLAY INC. - DO NOT COPY. DO NOT DISTRIBUTE.

INSTALLATION INSTRUCTIONS

EARTHSCAPE COLLECTIONS

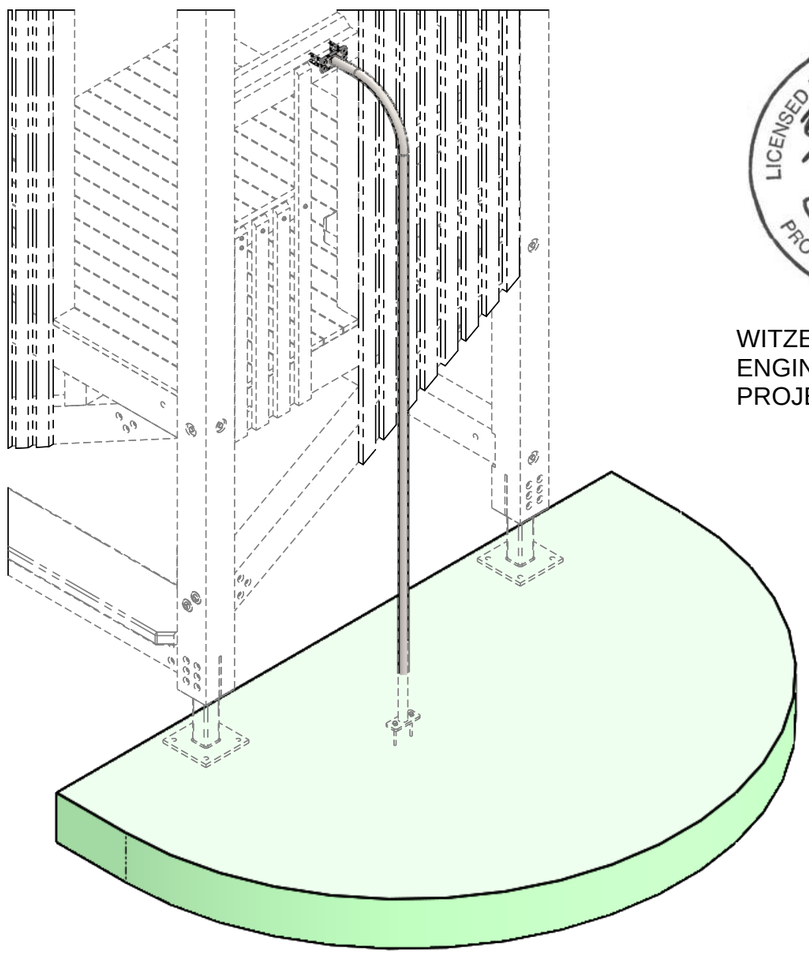

WITZEL DYCE
ENGINEERING INC.
PROJECT NO.: 12936-165

FIRE POLE

THESE INSTRUCTIONS APPLY TO THE FOLLOWING VERSIONS OF THIS PRODUCT:

F00302 - FIRE POLE - SURFACE MOUNT - 6' PLATFORM

WHICH IS DESIGNED TO BE INSTALLED ON THE FOLLOWING PRODUCTS:

1 LEVEL TIMBER TOWERS
2 LEVEL TIMBER TOWER
3 LEVEL TIMBER TOWER

NOTE: COLOURS SHOWN ARE REPRESENTATIONAL AND MAY NOT BE THE SAME AS THOSE OF THE SUPPLIED PRODUCT

FOR CSA AND ASTM SPECIFICATIONS AND GENERAL NOTES SEE MAIN STRUCTURE INSTALLATION PACKAGE

DATE DOCUMENT RELEASED 2024-06-17
DOCUMENT NUMBER: 1051479-R4

PROPERTY OF EARTHSCAPE PLAY INC. - DO NOT COPY. DO NOT DISTRIBUTE.

PLEASE READ ALL INSTRUCTIONS

Before starting to install this equipment be sure to read through and understand these instructions.
If you have any questions, contact your local dealer for assistance before proceeding.

MEASUREMENTS AND STANDARDS

Measurements have been provided in both metres and [feet-inches]. Ensure to follow standards noted for the location in which this play equipment is being installed. Those marked CSA are to be used in Canada and those marked ASTM to be used in the United States.

LIST OF ABBREVIATIONS

AYC = Alaskan Yellow Cedar
WRC = Western Red Cedar
DPS = Designated Play Surface
SS = Stainless Steel
HDG = Hot Dipped Galvanized
WWM = Welded Wire Mesh
TYP = Typical
C/W = Complete With
UNO = Unless Noted Otherwise
EWF = Engineered Wood Fiber
PIP = Poured-In-Place Rubber Surfacing
PT = Pressure Treated

TOOLS SUPPLIED WITH THIS PRODUCT

- No tools supplied

TOOLS THE INSTALLER NEEDS TO SUPPLY

- High torque drill
- Set of wood drill bits - up to 1/2"
- 1/2" impact driver
- Set of impact sockets - up to 1"
- 1/2" ratcheting socket wrench
- T25 drive bit
- T40 drive bit
- Hammer drill
- Concrete drill bit, 1/2" x 8"

EQUIPMENT THE INSTALLER NEEDS TO SUPPLY

- No special equipment required

INSTALLER CREW AND TIME REQUIRED

Number of people needed: 2
Typical total person-hours to install: 2
Time breakdown:

- 1 hour x 2 to position and anchor the fire pole

MATERIALS THE INSTALLER NEEDS TO SUPPLY

- No special materials required

WARNINGS

These instructions do not provide specific guidance on the use of tools or the lifting and moving heavy objects. It is assumed that competent people are installing this product who are familiar with using the tools and equipment required and are knowledgeable and skilled at lifting and positioning heavy objects.

PROPERTY OF EARTHSCAPE PLAY INC. - DO NOT COPY. DO NOT DISTRIBUTE.

MAKE SURE YOU HAVE ALL THE PARTS

Examine the equipment and ensure you have all the required parts listed in the table below.

PART IMAGE	ITEM NO.	PART NO.	DESCRIPTION	QTY.
SEE IMAGE THIS SHEET	1	B00089	FIRE POLE - SURFACE MOUNT	1
	2	H60020	Titen HD 1/2" x 5" Concrete Screw SS	2
	3	H16685	ASSY SK A2 8mm X 100mm SS	4

IMAGES OF FASTENERS IN THIS TABLE ARE REPRESENTATIONAL TO HELP IDENTIFY PARTS.

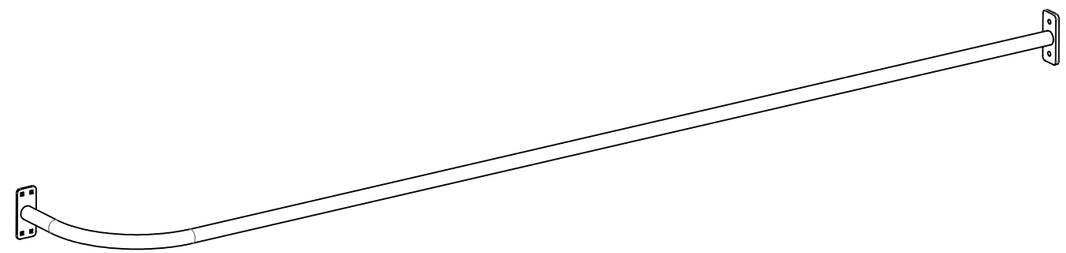

1 FIRE POLE - SURFACE MOUNT

PROPERTY OF EARTHSCAPE PLAY INC. - DO NOT COPY. DO NOT DISTRIBUTE.

FIRE POLE INSTALLATION

STEP 1 - CONFIRM WHERE THE ACCESSORY IS TO BE INSTALLED

Review the complepte tower installation package to determine on which side this accessory is to be installed and what the finished product should look like. The images shown on this page are representational and may not match your exact installation. Your installation could be a mirror image of what is shown on this sheet.

STEP 2 - LAYOUT LOCATION OF FIRE POLE

Mark the centre of the upper opening on the timber where the Fire Pole Top Plate will be secured as per Detail B

Mark the target location on the concrete pad for the centre of the Fire Pole Base Flange relative the the timber tower post base plates as shown in the Sample Elevation and Section A-A.

STEP 3 - ROUGH ALIGNMENT OF FIRE POLE

Align the top mounting plate of fire pole to the upper centre mark and temporarily hold in place.

Align the centre of the Base Flange with the mark on the concrete foundation pad and then check to ensure Fire Pole is plumb and the bottom mounting plate is resting flat on the concrete pad.

STEP 4 - ANCHOR FIRE POLE TO TOWER AND PAD

Secure the top plate to timber beam with screws as shown in Detail B. Predrill all screw holes as per manufacturer's instructions.

Secure base flange to concrete slab as noted in Sample Elevation.

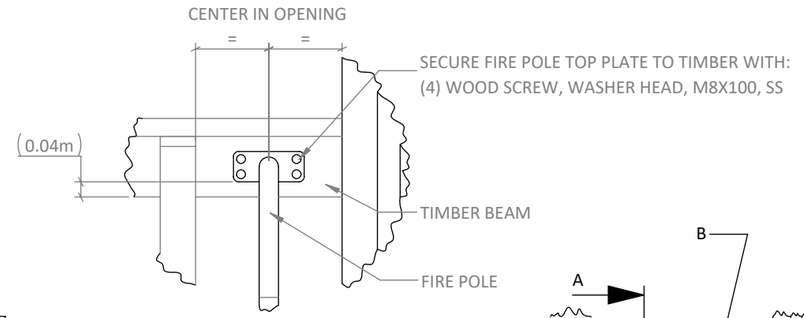

DETAIL B

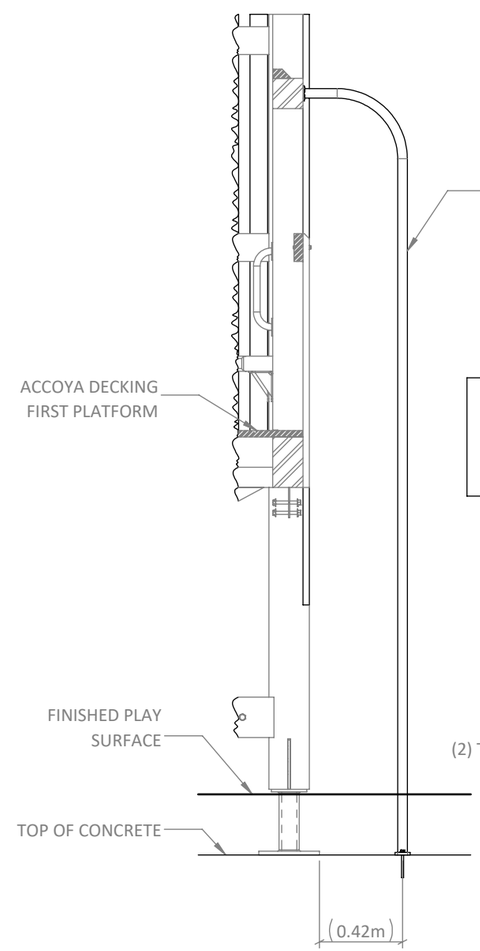

SECTION A-A

DIMENSIONS IN PARENTHESIS ARE APPROXIMATE. MINOR ADJUSTMENT MIGHT BE REQUIRED TO ENSURE FIRE POLE IS PLUMB AND BASE FLANGE RESTING ON CONCRETE PAD

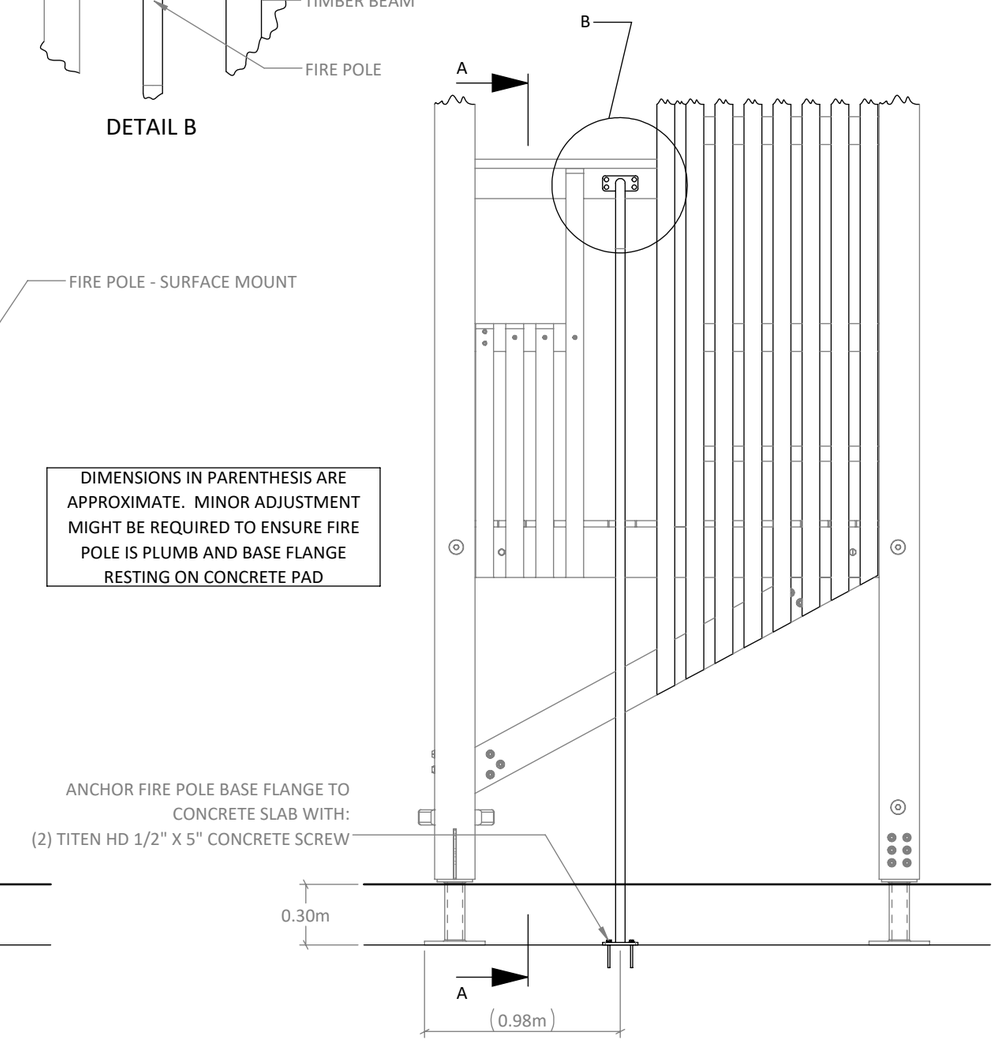

SAMPLE ELEVATION
(ACTUAL INSTALLATION MIGHT BE A MIRRORED VERSION OF THIS VIEW)

PROPERTY OF EARTHSCAPE PLAY INC. - DO NOT COPY. DO NOT DISTRIBUTE.

INSTALLATION INSTRUCTIONS

EARTHSCAPE COLLECTIONS

LICENSED PROFESSIONAL ENGINEER
M. JOHNSON
100514620
Sep 22, 2025
PROVINCE OF ONTARIO

WITZEL DYCE
ENGINEERING INC.
PROJECT NO.: 12936-165

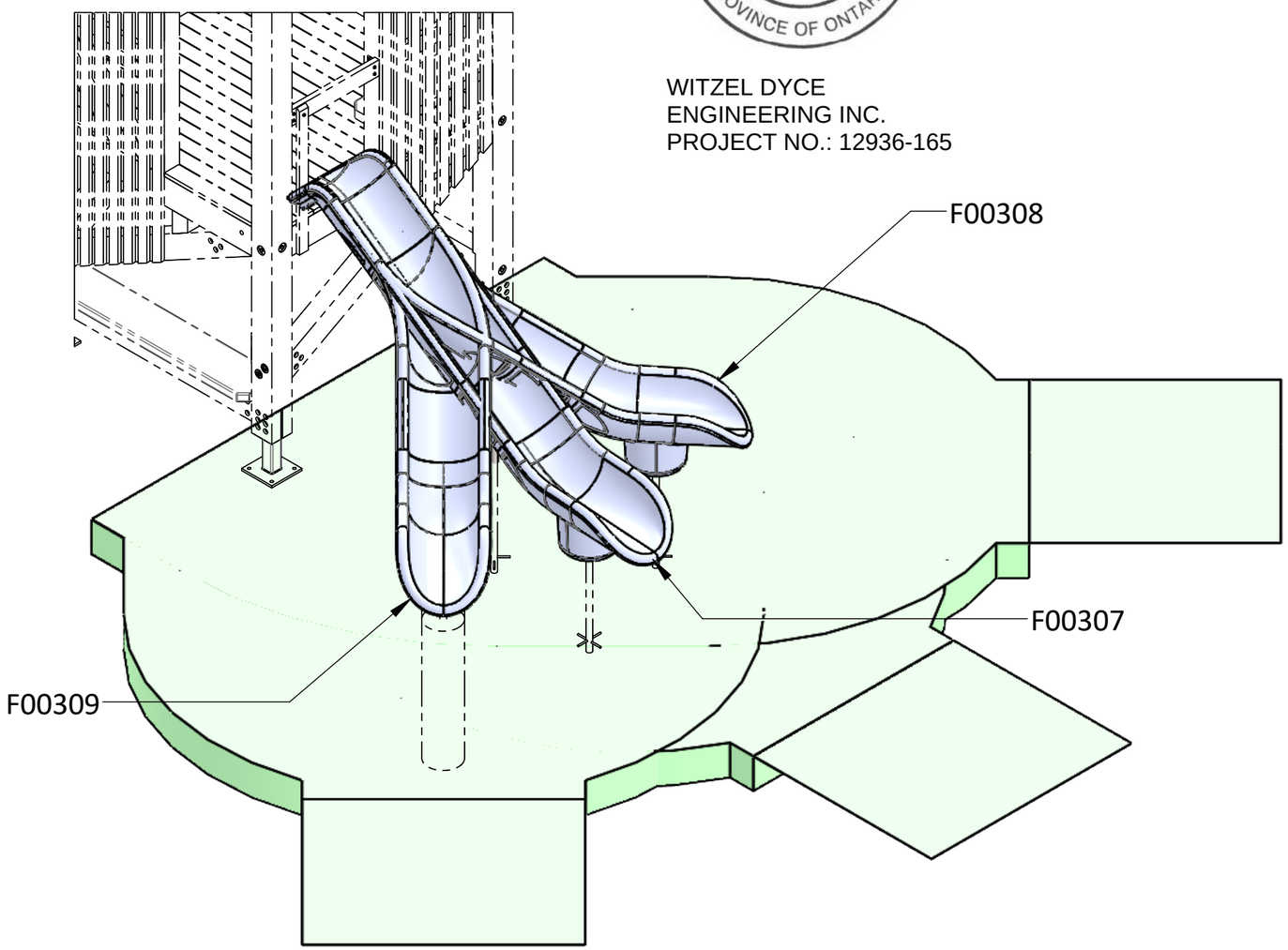

OPEN SLIDES - STARGLIDE

THESE INSTRUCTIONS APPLY TO THE FOLLOWING VERSIONS OF THIS PRODUCT:

F00307 - STARGLIDE 6' OPEN STRAIGHT SLIDE
F00308 - STARGLIDE 6' VEER LEFT SLIDE
F00309 - STARGLIDE 6' VEER RIGHT SLIDE

WHICH ARE DESIGNED TO BE INSTALLED ON THE FOLLOWING PRODUCTS:

F00182 - 2 LEVEL TIMBER TOWER
F00185 - 1 LEVEL TIMBER TOWER
F00407 - 2 LEVEL TIMBER TOWER
F00408 - 3 LEVEL TIMBER TOWER

NOTE: COLOURS SHOWN ARE REPRESENTATIONAL AND MAY NOT BE THE SAME AS THOSE OF THE SUPPLIED PRODUCT

FOR CSA AND ASTM SPECIFICATIONS AND GENERAL NOTES SEE MAIN STRUCTURE INSTALLATION PACKAGE

DATE DOCUMENT RELEASED 2021-09-06
DOCUMENT NUMBER: 1051525-R4

PROPERTY OF EARTHSCAPE PLAY INC. - DO NOT COPY. DO NOT DISTRIBUTE.

PLEASE READ ALL INSTRUCTIONS

Before starting to install this equipment be sure to read through and understand these instructions.

If you have any questions, contact your local dealer for assistance before proceeding.

MEASUREMENTS AND STANDARDS

Measurements have been provided in both metres and [feet-inches]. Ensure to follow standards noted for the location in which this play equipment is being installed. Those marked CSA are to be used in Canada and those marked ASTM to be used in the United States.

LIST OF ABBREVIATIONS

AYC = Alaskan Yellow Cedar
WRC = Western Red Cedar
DPS = Designated Play Surface
SS = Stainless Steel
HDG = Hot Dipped Galvanized
WWM = Welded Wire Mesh
TYP = Typical
C/W = Complete With
UNO = Unless Noted Otherwise
EWF = Engineered Wood Fiber
PIP = Poured-In-Place Rubber Surfacing
PT = Pressure Treated

TOOLS SUPPLIED WITH THIS PRODUCT

- No tools supplied

TOOLS THE INSTALLER NEEDS TO SUPPLY

- High torque drill
  - recommend right angle or flexible drive
- Set of wood drill bits - up to 1/2"
- 1/2" impact driver
- Set of impact sockets - up to 1"
- 1/2" ratcheting socket wrench
- Set of imperial hex keys - up to 1/4"
- T25 drive bit
- T40 drive bit
- Transit or Laser Level
- Rigging and lifting straps

EQUIPMENT THE INSTALLER NEEDS TO SUPPLY

Machine to aid in lifting and positioning the slide.

- Site assembled Starglide plastic slide +/- 80 kg [180 lbs]

INSTALLER CREW AND TIME REQUIRED

Number of people needed: 2
Typical total person-hours to install: 5 + concrete cure time
Time breakdown:

- 1 hour x 2 people for excavation and pouring concrete
- 1 hour x 2 people for onsite fabrication and play equipment installation
- Time for concrete cure
- 1 hour x 1 person to remove bracing and install string probe kit

MATERIALS THE INSTALLER NEEDS TO SUPPLY

- Concrete

WARNINGS

These instructions do not provide specific guidance on the use of tools or the lifting and moving heavy objects. It is assumed that competent people are installing this product who are familiar with using the tools and equipment required and are knowledgeable and skilled at lifting and positioning heavy objects.

PROPERTY OF EARTHSCAPE PLAY INC. - DO NOT COPY. DO NOT DISTRIBUTE.

MAKE SURE YOU HAVE ALL THE PARTS

Examine the equipment and ensure you have all the required parts listed in the tables below.

PART IMAGE	ITEM NO.	PART NO.	DESCRIPTION	QTY.
SEE STANDARD DETAIL SD-035A AT PACK OF THIS PACKAGE	1	B00002	STRING PROBE KIT 135°	1
SEE IMAGE THIS SHEET	2	B00047	BRACKET SLIDE FOOTBUCK	1
SEE IMAGE THIS SHEET	3	B00056-70	SPI SLIDE SUPPORT POST - 70"	1
	4	H16674	ASSY SK A2 8mm X 80mm SS	3
ONE OF THE FOLLOWING SLIDES WILL BE SUPPLIED AS PER THE PRODUCT NUMBER ORDERED				
SEE IMAGE THIS SHEET	5A	SL0010	6' STARGLIDE SLIDE STRAIGHT (F00307)	1
SEE IMAGE THIS SHEET	5B	SL0018	6' STARGLIDE SLIDE VEER LEFT (F00308)	1
SEE IMAGE THIS SHEET	5C	SL0019	6' STARGLIDE SLIDE VEER RIGHT (F00309)	1

IMAGES OF FASTENERS IN THIS TABLE ARE REPRESENTATIONAL AND ARE PROVIDED TO HELP IDENTIFY PARTS.

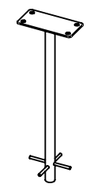

2 BRACKET SLIDE FOOTBUCK

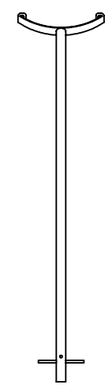

3 SPI SLIDE SUPPORT POST - 70"

5A

6' STARGLIDE SLIDE - STRAIGHT
(FOR PRODUCT F00307)
DOES NOT COME ASSEMBLED

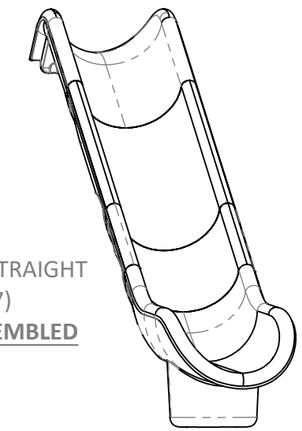

OR

5B

6' STARGLIDE SLIDE - VEER LEFT
(FOR PRODUCT F00308)
DOES NOT COME ASSEMBLED

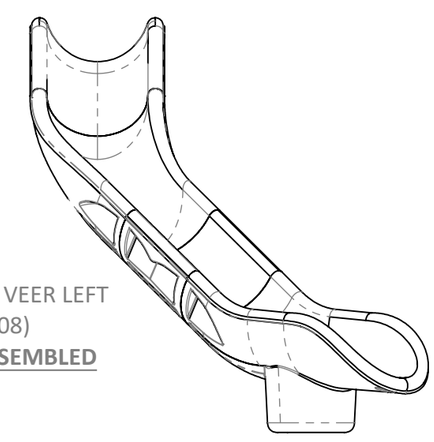

OR

5C

6' STARGLIDE SLIDE - VEER RIGHT
(FOR PRODUCT F00309)
DOES NOT COME ASSEMBLED

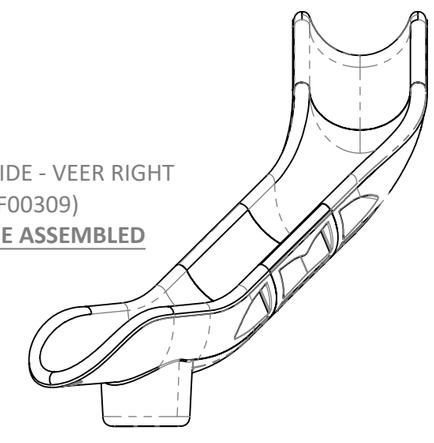

PROPERTY OF EARTHSCAPE PLAY INC. - DO NOT COPY. DO NOT DISTRIBUTE.

POSITION SLIDE

OPEN SLIDES - STARGLIDE

STEP 1 - CONFIRM WHERE THE ACCESSORY IS TO BE INSTALLED

Review the complete tower installation package and determine which side the slide is to be installed and what the finished product should look like. The images shown on this page are representational and may not match your exact installation. Your installation could be a mirror image of what is shown on this sheet and the shape of the slide could differ depending on the product number ordered.

STEP 2 - ASSEMBLE THE SLIDE AND SUPPORT POSTS

The plastic parts of the slide will arrive in pieces. Assemble using manufacturer's supplied hardware and instructions.
Secure the Middle Support Post to the slide (SPI Slide Support Post - 70") as per detail SD-007 at the back of this package
Secure the Slide Base Bracket (Bracket Slide Footbuck) to the slide as per detail SD-006 at the back of this package.

STEP 3 - POSITION SLIDE

With the slide fully assembled, position the top of the slide in the prefabricated notch in the tower. Centre in the opening as per Detail A this sheet.

Position the 2 support posts in the pre-augered holes (**as per complete tower installation package**).

Temporarily brace the slide to ensure the exit of the slide meets the target ***exit height*** above the finished play surface as per the Sample Side Elevation (this sheet) and detail SD-006 at the back of this package.

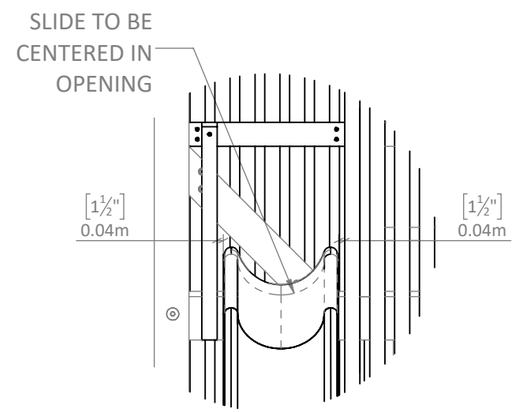

DETAIL A

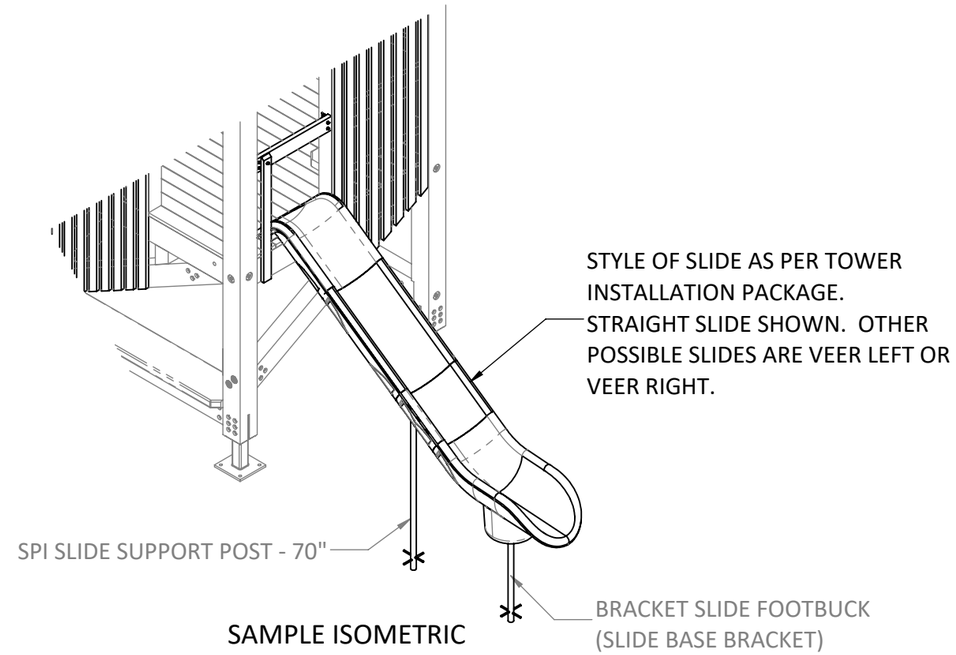

SAMPLE ISOMETRIC

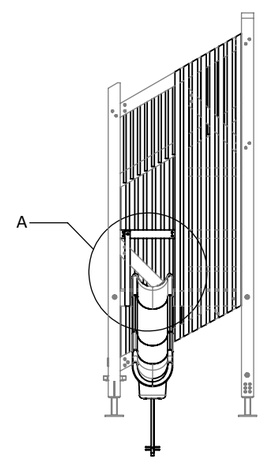

SAMPLE FRONT ELEVATION

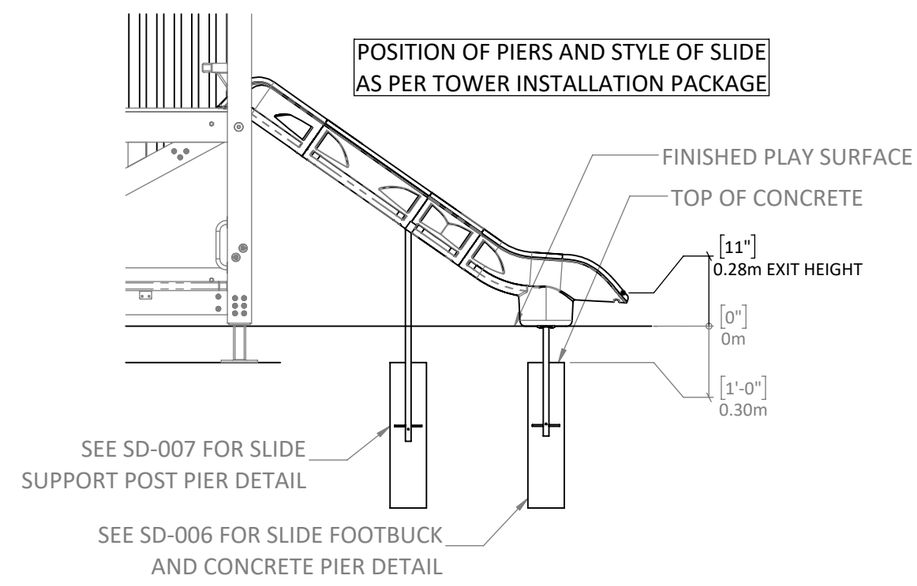

SAMPLE SIDE ELEVATION

PROPERTY OF EARTHSCAPE PLAY INC. - DO NOT COPY. DO NOT DISTRIBUTE.

STEP 4 - SECURE TOP OF SLIDE TO TOWER

Predrill and install the screws at the top of the slide as per Detail B this sheet

STEP 5 - POUR CONCRETE PIERS

Pour concrete piers as per details SD-006 and SD-007 at back of this package. Allow concrete to cure prior to proceeding to step 6.

STEP 6 - REMOVE BRACING

Once concrete piers have cured, remove temporary slide bracing.

STEP 7 - INSTALL STRING PROBE KIT

Install the string probe kit at the top of the slide as per detail SD-035A at the back of this package.

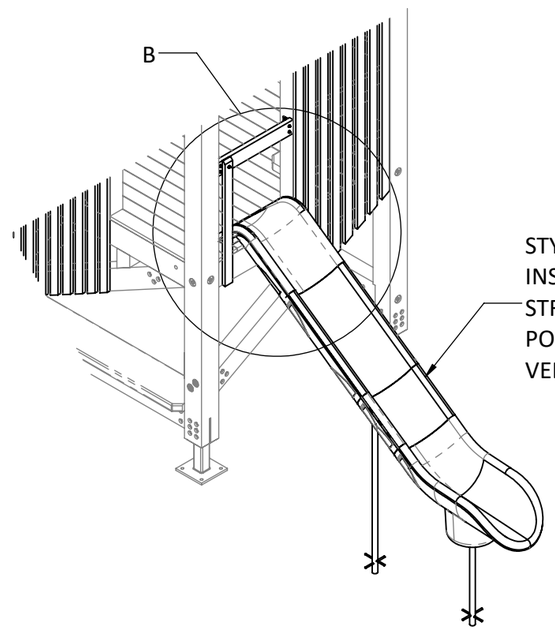

SAMPLE ISOMETRIC

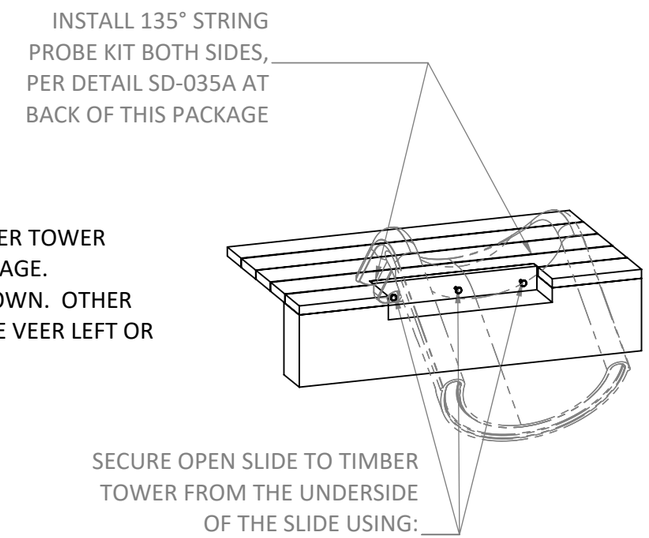

DETAIL B

PROPERTY OF EARTHSCAPE PLAY INC. - DO NOT COPY. DO NOT DISTRIBUTE.

SD-006

OPEN SLIDES - STARGLIDE

NOTES:

1. THIS CONNECTION DETAIL IS ONLY INTENDED TO SHOW AN ISOLATED SECTION. REFER TO THE APPROPRIATE DETAILS AS NOTED IN THE CONSTRUCTION DRAWINGS FOR ALL OTHER INFORMATION
2. IF SLIDE HEIGHT IS LESS THAN 1.2m [47.2"], EXIT HEIGHT MUST BE FROM 0-275mm [0-10.8"] ABOVE GRADE
3. IF SLIDE HEIGHT IS MORE THAN 1.2M [47.2"], EXIT HEIGHT MUST BE BETWEEN 175-380mm [6.9-15"] ABOVE GRADE
4. SLIDE EXIT HEIGHT TO BE SPECIFICALLY NOTED IN PROJECT INSTALLATION DRAWING

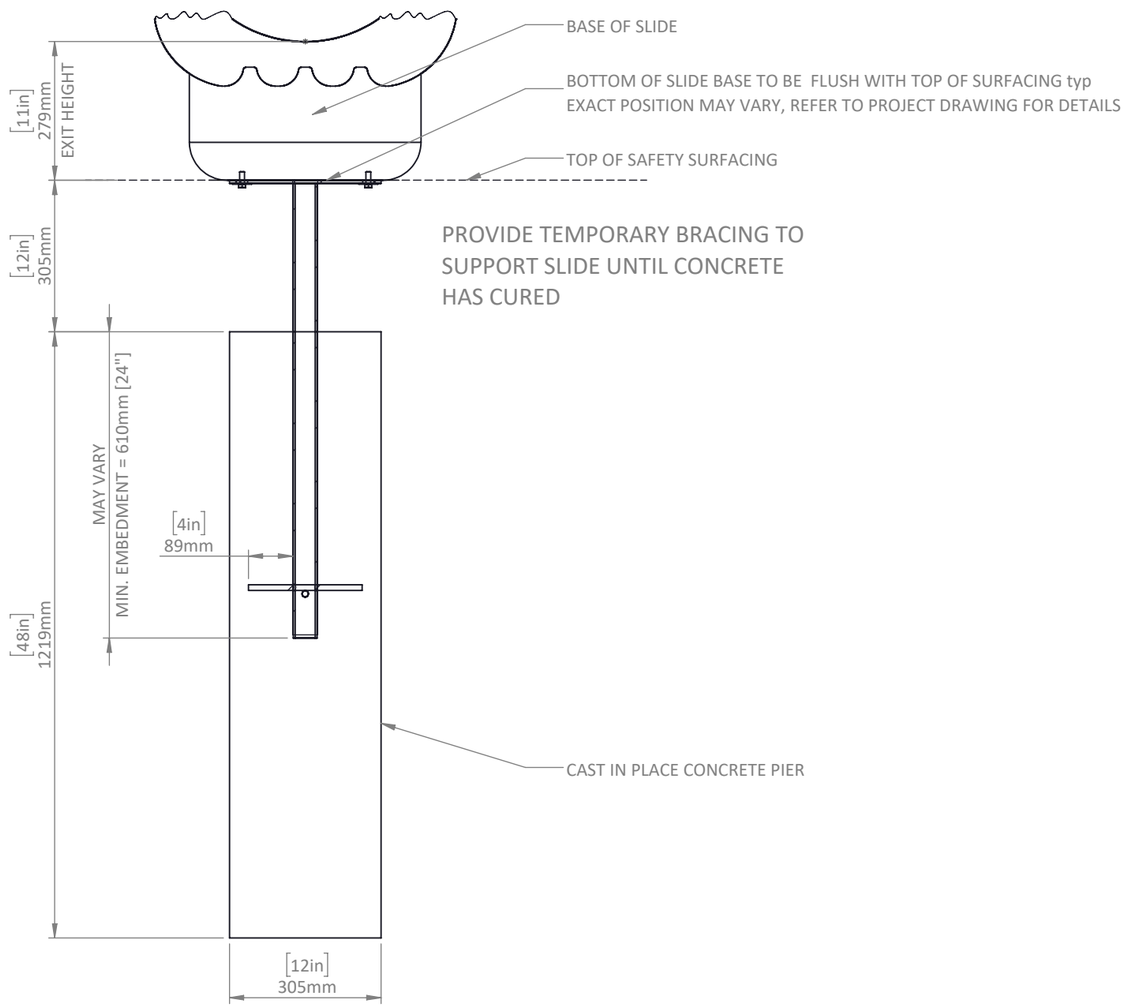

HARDWARE REFERENCE LIST

ITEM NO.	PartNo	DESCRIPTION	QTY.
1	B00047	Bracket Slide Footbuck	1
2	H30052	Washer 3/8" x 1-1/2" SS Fender	4
3	H10244	Hex Cap Screw 3/8-16 x 1 SS full thread	4

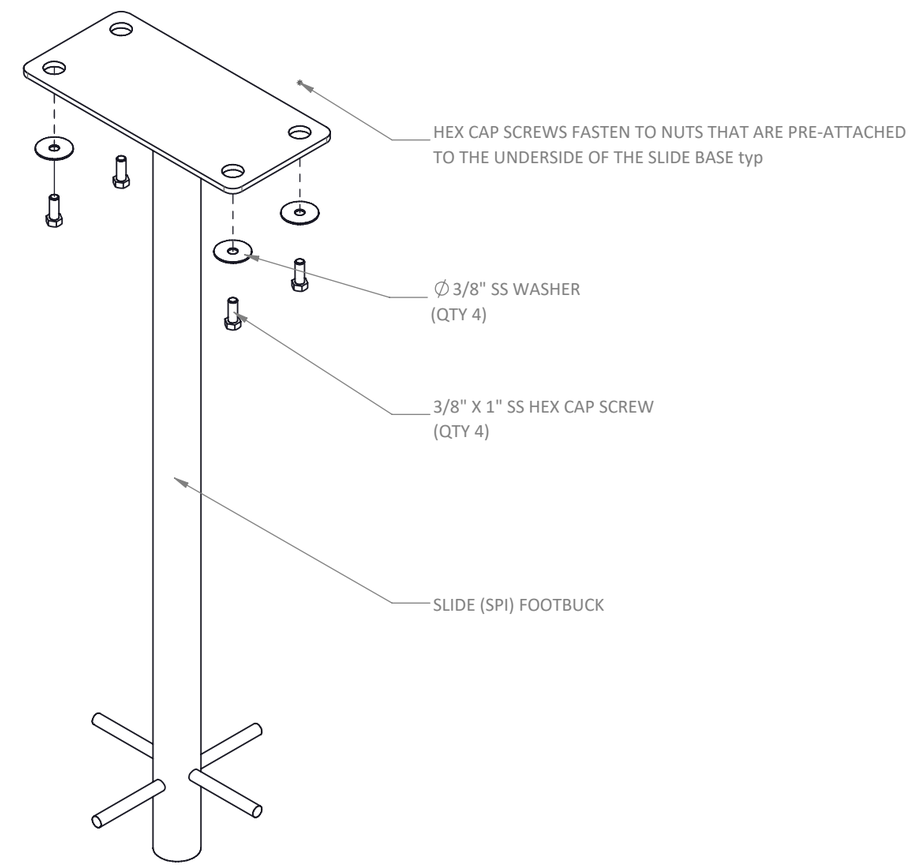

SLIDE (SPI) BASE BRACKET INSTALLATION

PROPERTY OF EARTHSCAPE PLAY INC. - DO NOT COPY. DO NOT DISTRIBUTE.

SD-007

OPEN SLIDES - STARGLIDE

IF REQUIRED, SLIDE POSTS TO BE CUT TO LENGTH ON SITE BY CONTRACTOR ONCE GRADE HAS BEEN ESTABLISHED
IF SLIDE HEIGHT IS LESS THAN 1.2m [47.2"], EXIT HEIGHT MUST BE FROM 0-275mm [0-10.8"] ABOVE GRADE
IF SLIDE HEIGHT IS MORE THAN 1.2M [47.2"], EXIT HEIGHT MUST BE BETWEEN 175-380mm [6.9-15"] ABOVE GRADE

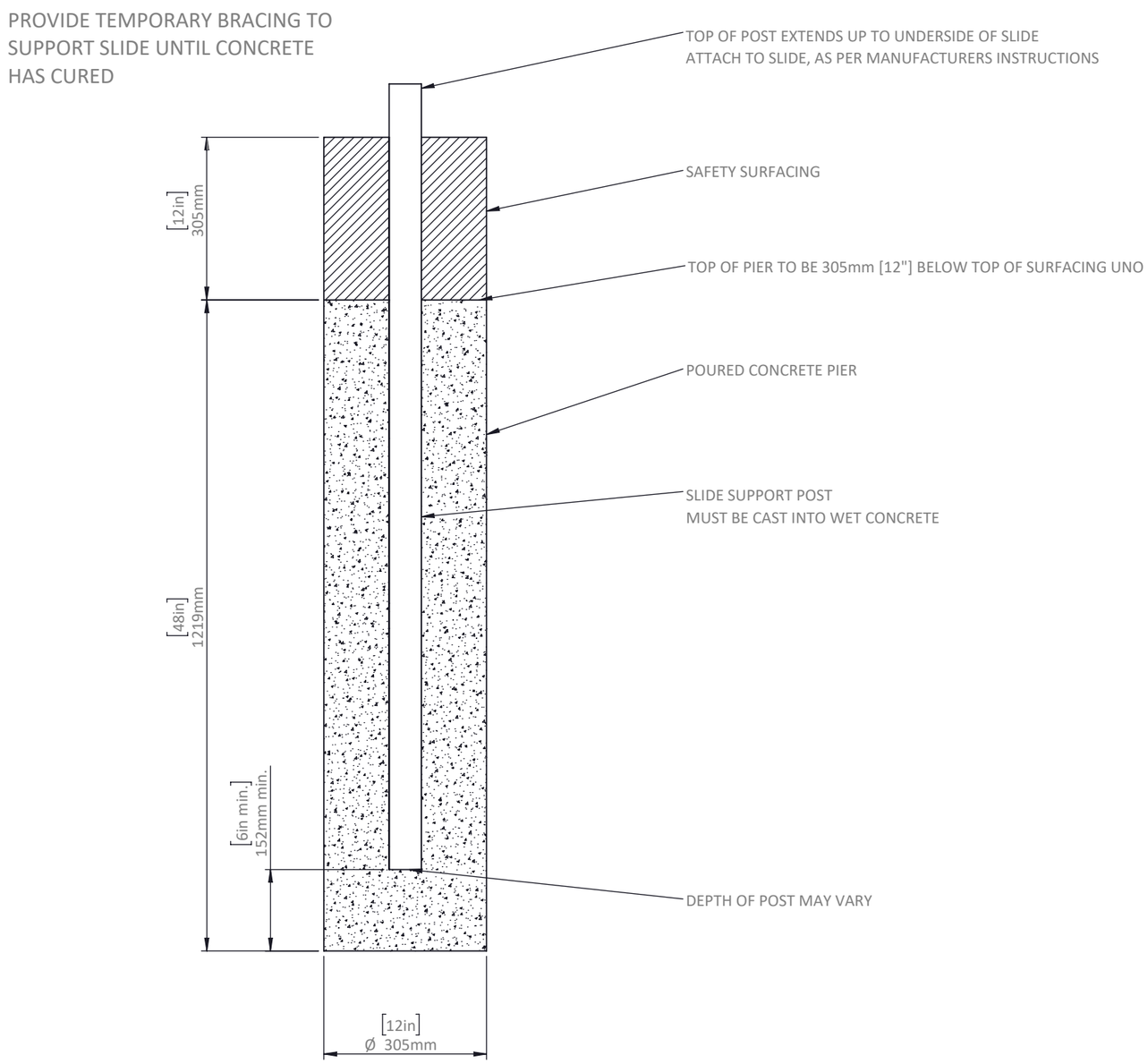

SLIDE SUPORT POST PIER INSTALLATION

PROPERTY OF EARTHSCAPE PLAY INC. - DO NOT COPY. DO NOT DISTRIBUTE.

SD-035A

OPEN SLIDES - STARGLIDE

NOTES:

1. REFER TO "GENERAL NOTES" SHEET FOR ALL GENERAL NOTES
2. THIS CONNECTION DETAIL IS ONLY INTENDED TO SHOW AN ISOLATED SECTION. REFER TO THE APPROPRIATE DETAILS AS NOTED IN THE INSTALLATION PACKAGE FOR ALL OTHER INFORMATION

B00002 KIT BOM			
ITEM NO.	PartNo	DESCRIPTION	QTY.
1	B00017	Bracket Slide String Probe 135°	2
2	H13225	Button Socket Head Cap Screw 3/8-16 x 1 SS	2
3	H16685	ASSY SK A2 8mm x 100mm SS	2
4	H30053	Washer 3/8" x 7/8" SS	2
5	H40071	Flat Rivet Nut 3/8"-16 SS	2
ITEMS BELOW ARE NOT SHOWN IN THIS DETAIL. THEY ARE USED FOR MOUNTING THE SLIDE BASE BRACKET. SEE SD-006 FOR MORE INFORMATION.			
6	H10244	Hex Cap Screw 3/8-16 x 1 SS full thread	4
7	H30052	Washer 3/8" x 1-1/2" SS Fender	4

*ONLY USE ONE KIT PER SLIDE

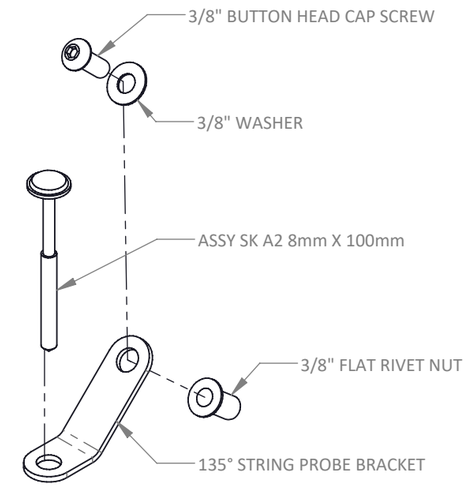

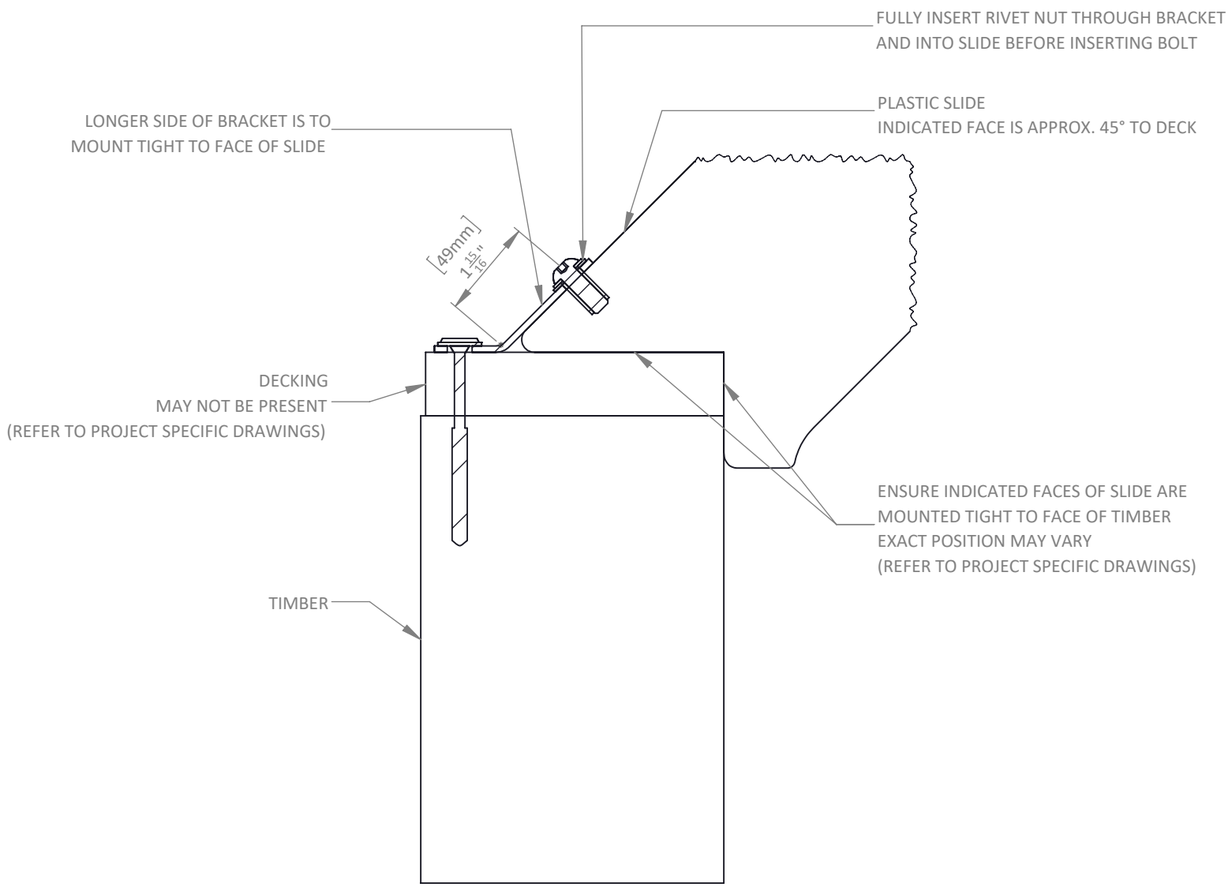

DETAIL A

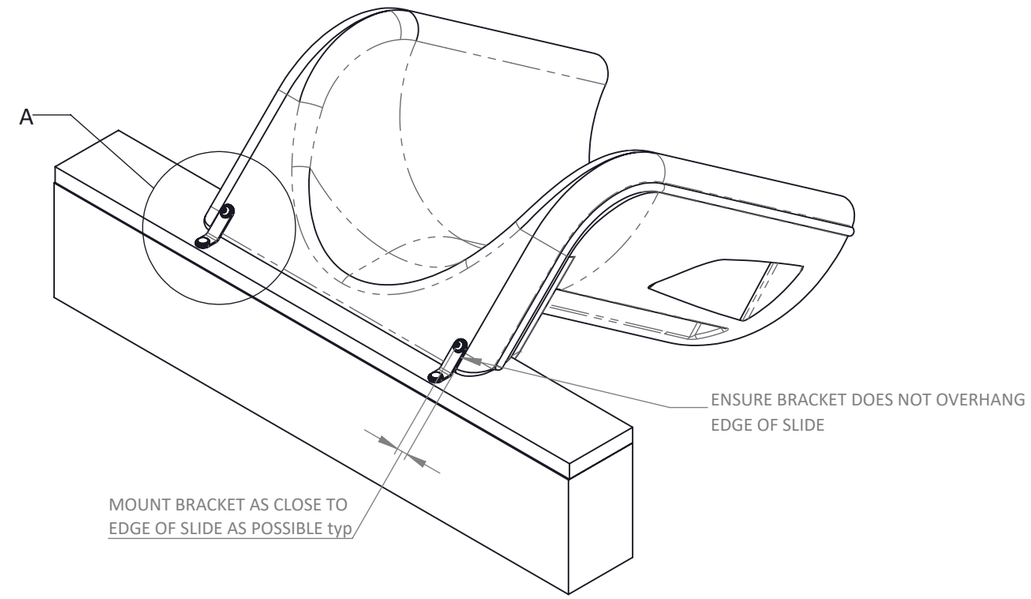

135° STRING PROBE BRACKET INSTALLATION

DATE DOCUMENT RELEASED 2021-09-06
DOCUMENT NUMBER: 1051525 - R4

PROPERTY OF EARTHSCAPE PLAY INC. - DO NOT COPY. DO NOT DISTRIBUTE.

INSTALLATION INSTRUCTIONS

EARTHSCAPE COLLECTIONS

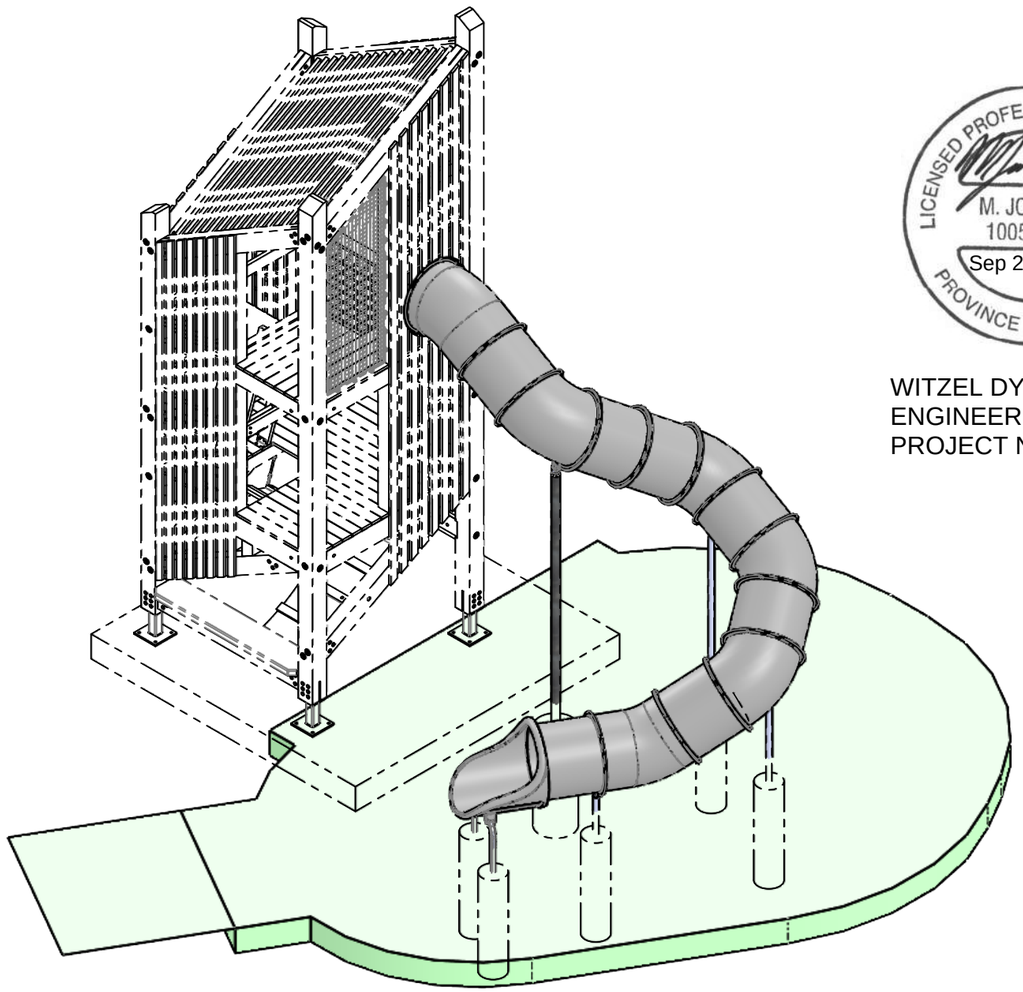

LICENSED PROFESSIONAL ENGINEER
M. JOHNSON
100514620
Sep 22, 2025
PROVINCE OF ONTARIO

WITZEL DYCE
ENGINEERING INC.
PROJECT NO.: 12936-165

PLASTIC TUBE SLIDE - FLANGE - 12' - TURN RIGHT

THESE INSTRUCTIONS APPLY TO THE FOLLOWING VERSIONS OF THIS PRODUCT:

F00316 - PLASTIC TUBE SLIDE - FLANGE - 12' - TURN RIGHT

WHICH IS DESIGNED TO BE INSTALLED ON THE FOLLOWING PRODUCTS:

F00407 - 2 LEVEL TIMBER TOWER
F00408 - 3 LEVEL TIMBER TOWER

NOTE: COLOURS SHOWN ARE REPRESENTATIONAL AND MAY NOT BE THE SAME AS THOSE OF THE SUPPLIED PRODUCT

FOR CSA AND ASTM SPECIFICATIONS AND GENERAL NOTES, SEE MAIN STRUCTURE INSTALLATION PACKAGE.

DATE DOCUMENT RELEASED 2022-11-09
DOCUMENT NUMBER: 1074101-R2

PROPERTY OF EARTHSCAPE PLAY INC. - DO NOT COPY. DO NOT DISTRIBUTE.

PLEASE READ ALL INSTRUCTIONS

Before starting to install this equipment be sure to read through and understand these instructions.

If you have any questions, contact your local dealer for assistance before proceeding.

MEASUREMENTS AND STANDARDS

Measurements have been provided in both metres and [feet-inches]. Ensure to follow standards noted for the location in which this play equipment is being installed. Those marked CSA are to be used in Canada and those marked ASTM to be used in the United States.

LIST OF ABBREVIATIONS

AYC = Alaskan Yellow Cedar
WRC = Western Red Cedar
DPS = Designated Play Surface
SS = Stainless Steel
HDG = Hot Dipped Galvanized
WWM = Welded Wire Mesh
TYP = Typical
C/W = Complete With
UNO = Unless Noted Otherwise
EWF = Engineered Wood Fiber
PIP = Poured-In-Place Rubber Surfacing
PT = Pressure Treated

TOOLS SUPPLIED WITH THIS PRODUCT

- T00047 - Tri Groove Drive (Fits 5/16", 3/8", 8mm AND 10mm)

TOOLS THE INSTALLER NEEDS TO SUPPLY

- High torque drill
- 1/2" impact driver
- Set of impact sockets - up to 1"
- 1/2" ratcheting socket wrench
- Set of hex keys
- Set of wood drill bits - up to 1/2"
- T25 drive bit
- T40 drive bit
- Angle grinder (with course 24 grit sanding disks and metal cut off disks)
- Transit or Laser Level
- Rigging and lifting straps

EQUIPMENT THE INSTALLER NEEDS TO SUPPLY

Machine to lift and position heaviest element.

- Site assembled slide +/- 250 kg [560 lbs]

Machine or scaffolding to allow installers to work safely at heights.

INSTALLER CREW AND TIME REQUIRED

Number of people needed: 2
Typical total person-hours to install: 24 + concrete cure time

Time breakdown:

- 2 hours x 2 people for excavation
- 7 hours x 2 people for onsite fabrication and play equipment installation
- 2 hours x 2 people for pouring concrete
- Time for concrete cure
- 1 hours x 2 people for temporary brace removal

MATERIALS THE INSTALLER NEEDS TO SUPPLY

- Threadmate threadlocker Vibra-Tite VC-3 (or equal)
- Concrete

WARNINGS

These instructions do not provide specific guidance on the use of tools or the lifting and moving heavy objects. It is assumed that competent people are installing this product who are familiar with using the tools and equipment required and are knowledgeable and skilled at lifting and positioning heavy objects.

PROPERTY OF EARTHSCAPE PLAY INC. - DO NOT COPY. DO NOT DISTRIBUTE.

SUPPLIED PARTS

PLASTIC TUBE SLIDE - FLANGE - 12' - TURN RIGHT

MAKE SURE YOU HAVE ALL THE PARTS

Examine the equipment and ensure you have all the required parts listed in the table below.

PART IMAGE	ITEM NO.	PART NO.	DESCRIPTION	QTY.
	1	H13224	BUTTON SOCKET HEAD CAP SCREW 3/8-16 X 7/8 SS	13
	2	H30053	WASHER 3/8" X 7/8" SS	13
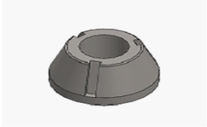	3	H40032	TRI-GROOVE NUT 3/8"-16	13
NO IMAGE PROVIDED	4	T00047	TRI GROOVE DRIVE (FITS 5/16", 3/8", 8mm AND 10mm)	1
SEE IMAGE THIS SHEET	5	SL0030	PLASTIC TUBE SLIDE - FLANGE - 12' - TURN RIGHT	1

IMAGES OF FASTENERS IN THIS TABLE ARE REPRESENTATIONAL TO HELP IDENTIFY PARTS.

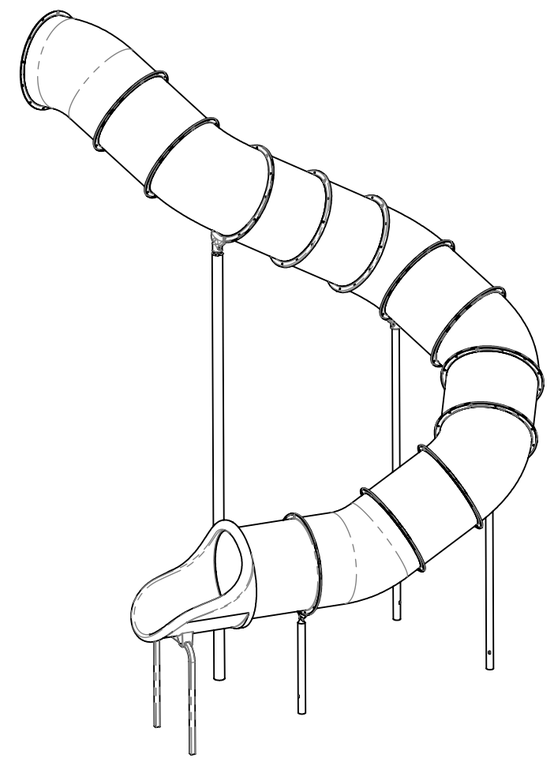

SL0030 - PLASTIC TUBE SLIDE - FLANGE - 12' - TURN RIGHT

(DOES NOT SHIP PRE-ASSEMBLED)

PROPERTY OF EARTHSCAPE PLAY INC. - DO NOT COPY. DO NOT DISTRIBUTE.

FINISHED PRODUCT

PLASTIC TUBE SLIDE - FLANGE - 12' - TURN RIGHT

WHAT THE FINISHED PRODUCT LOOKS LIKE

Finished play surface and concrete foundations by Installer.

The foundation design shown here might be different than what is shown in the main tower installation package. If any differences are noted, the main installation package shall take precedent over the details shown here.

The foundation detail provided in these instructions has been developed assuming typical soil conditions specified in general notes. If the subgrade encountered does not meet these conditions, the subgrade must be improved or revisions made to this detail. Revisions to the detail are the responsibility of the Installer and it is strongly recommended any changes be reviewed and approved by a registered engineer.

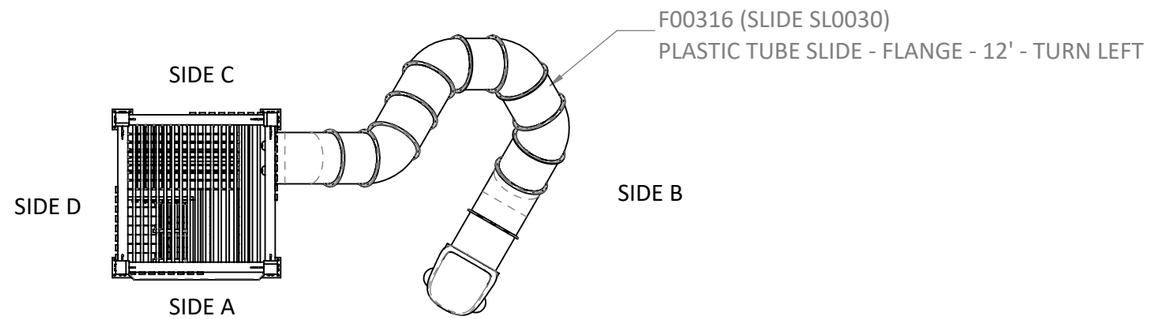

PLAN VIEW

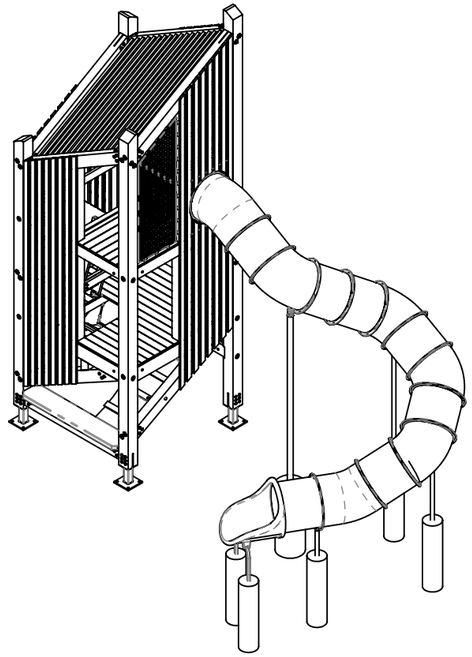

ISOMETRIC VIEW

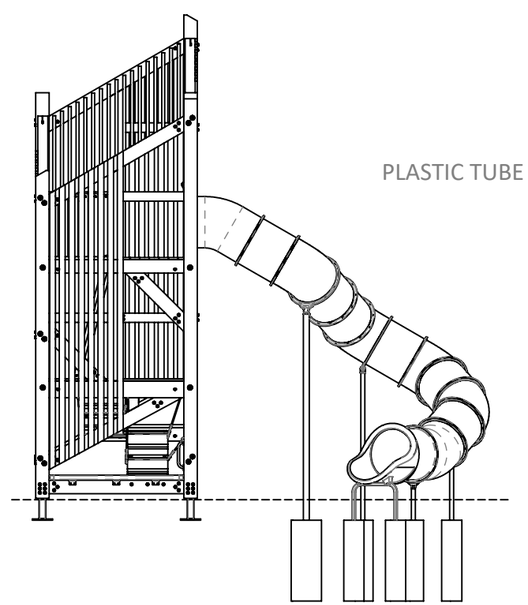

SIDE A ELEVATION

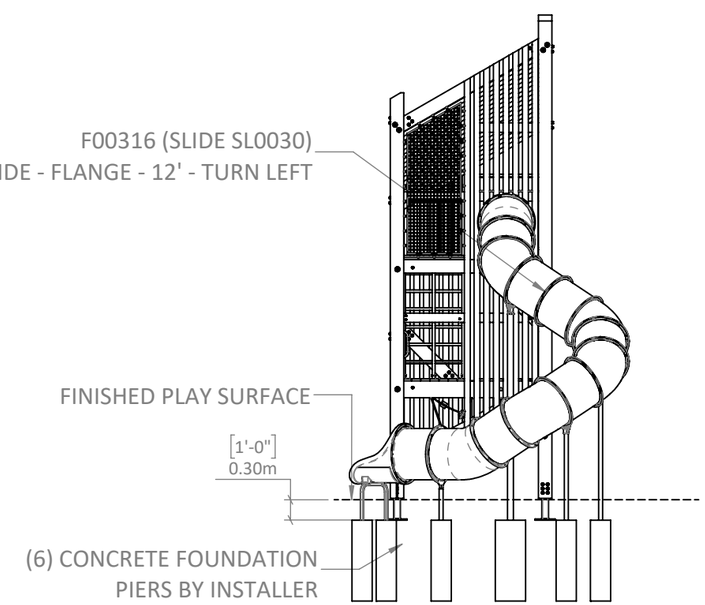

SIDE B ELEVATION

PROPERTY OF EARTHSCAPE PLAY INC. - DO NOT COPY. DO NOT DISTRIBUTE.

LOCATE PLAY EQUIPMENT

PLASTIC TUBE SLIDE - FLANGE - 12' - TURN RIGHT

STEP 1 - LOCATING THE EQUIPMENT ON SITE

Review the complete tower installation package to determine what the finished product should look like. The images shown in this package are representational and may not match your exact installation.

Ensure you know what the designed elevation is for the finished safety surface. All heights provided in these instructions will be relative to the finished play surface. The finished surface elevation is not within the scope of these instructions and should be provided by others.

THESE INSTRUCTIONS ARE BASED ON A STANDARD WHICH ASSUMES A LEVEL PLAYING SURFACE THAT IS 305mm (12") DEEP.

STEP 2 - LAYOUT SLIDE PIERS

Layout the centre of all slide piers using the pier layout plan and the pier location table this sheet. Use the corners of the tower post base brackets noted as reference points in the complete tower installation package.

STEP 3 - AUGER HOLES

Auger all slide pier holes as per Typical Augered Pier detail this sheet as per the diameter noted in Pier Layout Table this sheet. Note depth of augured hole provided from the standard **finished play surface grade**. Finished grades are not within the scope of these instructions and should be provided by others.

SLIDE SUPPORT POSTS TO BE CAST IN PLACE DURING INSTALLATION.

DO NOT POUR CONCRETE YET.

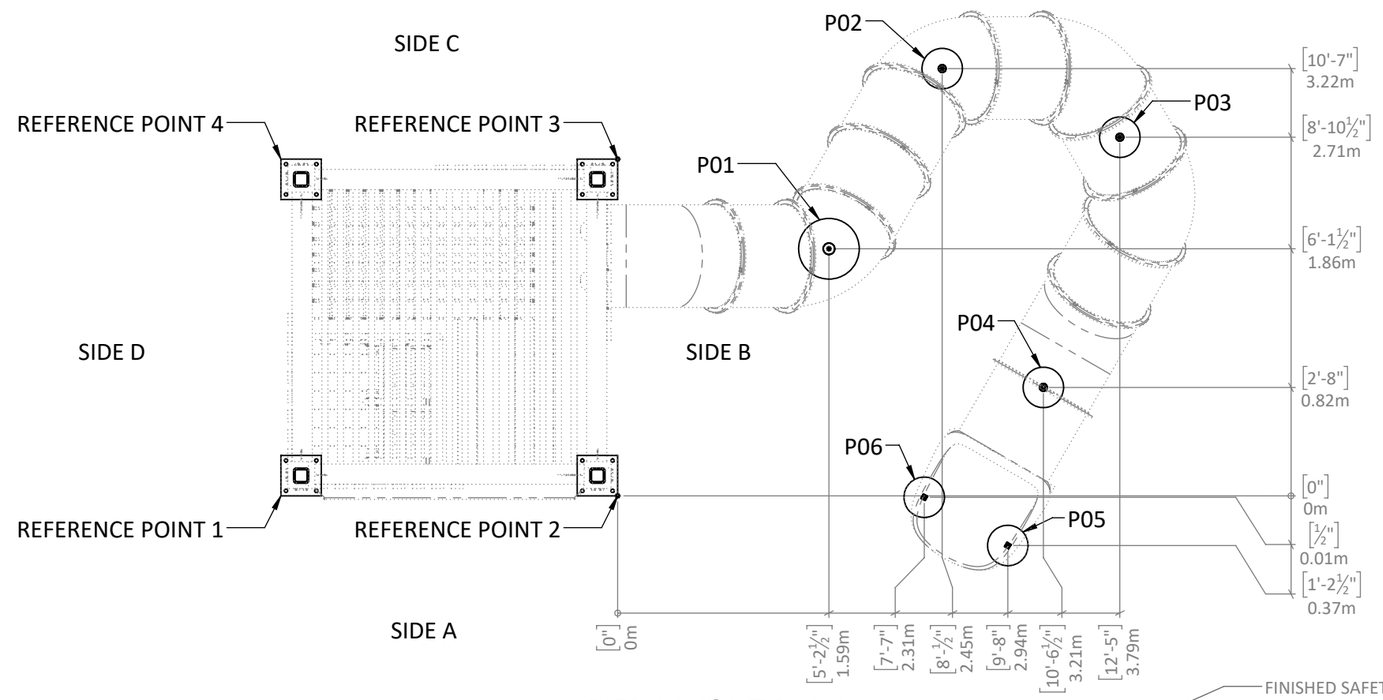

PIER LAYOUT PLAN

PIER LAYOUT TABLE			
PIER I.D.	RAY FROM REF. POINT 2	RAY FROM REF. POINT 3	PIER DIAMETER
P01	[8'-½"] 2.45m	[5'-8"] 1.73m	[1'-6"] ∅0.46m
P02	[13'-3½"] 4.05m	[8'-4"] 2.54m	[1'-0"] ∅0.30m
P03	[15'-3"] 4.65m	[12'-5½"] 3.79m	[1'-0"] ∅0.30m
P04	[10'-10½"] 3.31m	[11'-11½"] 3.64m	[1'-0"] ∅0.30m
P05	[9'-9"] 2.97m	[13'-7"] 4.14m	[1'-0"] ∅0.30m
P06	[7'-7"] 2.31m	[11'-3½"] 3.44m	[1'-0"] ∅0.30m

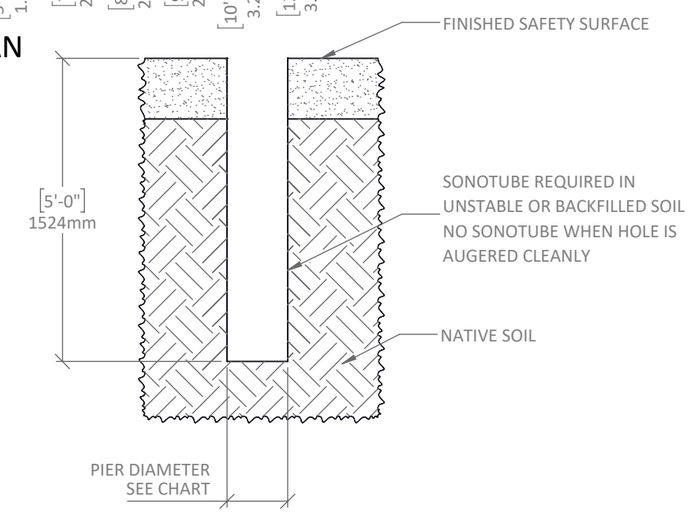

TYPICAL AUGERED PIER

PROPERTY OF EARTHSCAPE PLAY INC. - DO NOT COPY. DO NOT DISTRIBUTE.

SLIDE ENTRANCE

PLASTIC TUBE SLIDE - FLANGE - 12' - TURN RIGHT

STEP 4 - PREP TOWER FOR TUBE SLIDE INSTALL

Temporarily remove tread from wooden step from inside of tower at entrance to slide as shown in Inside View. Save screws

STEP 5 - INSTALL TUBE SLIDE ENTRANCE SECTION

Position the slide entrance section as shown in Slide Entrance Section View and Slide Entrance Elevation View this sheet.

Secure the tube slide entrance section to the steel panel already mounted on the timber tower as per Detail B.

Reinstall tread for wooden step inside the tower.

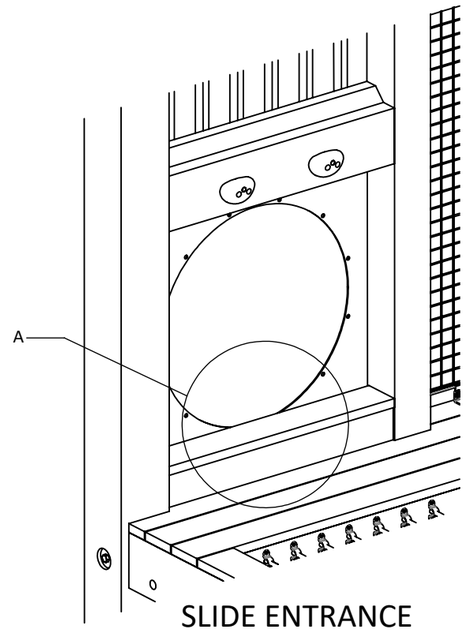

SLIDE ENTRANCE
INSIDE VIEW

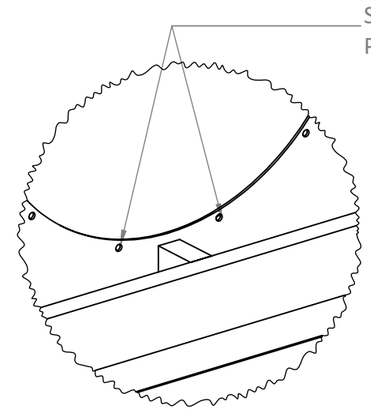

DETAIL A

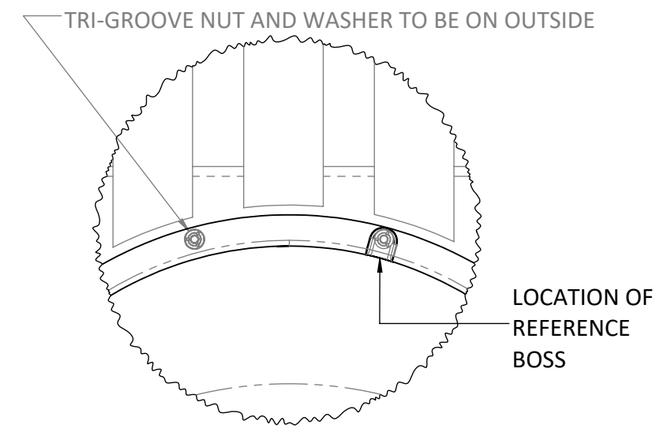

DETAIL B

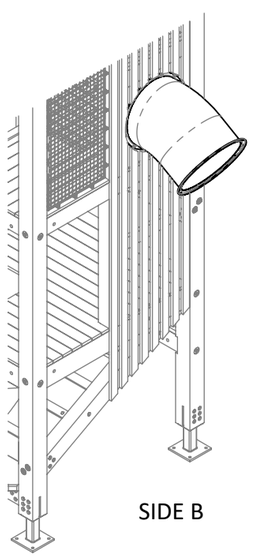

ISOMETRIC VIEW

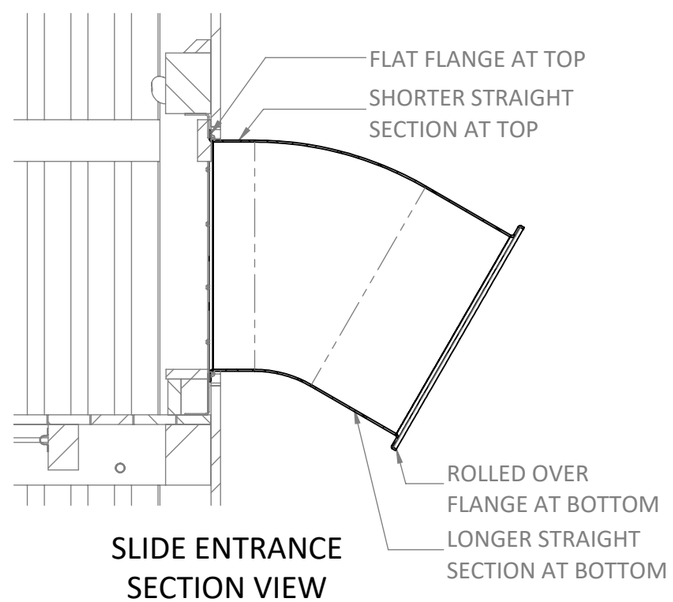

SLIDE ENTRANCE
SECTION VIEW

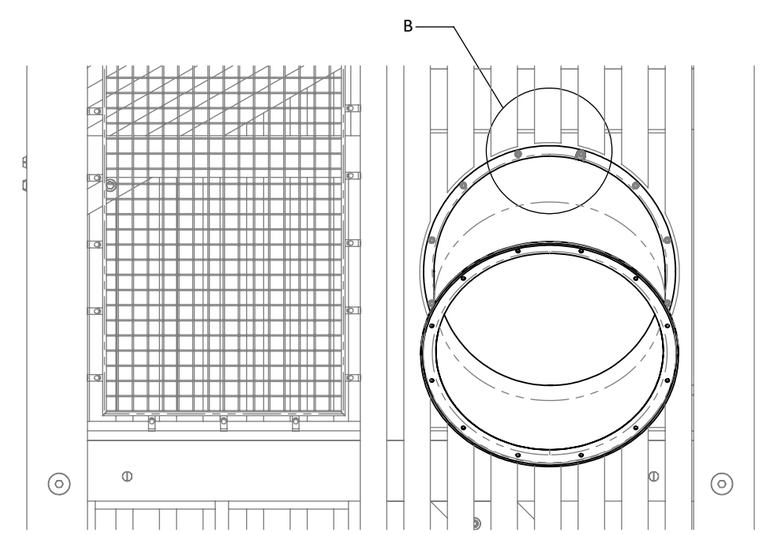

SLIDE ENTRANCE
ELEVATION VIEW

PROPERTY OF EARTHSCAPE PLAY INC. - DO NOT COPY. DO NOT DISTRIBUTE.

ASSEMBLE SLIDE

PLASTIC TUBE SLIDE - FLANGE - 12' - TURN RIGHT

STEP 6 - ASSEMBLE REMAINDER OF TUBE SLIDE

Complete the assembly and installation of the slide in the order noted on the Slide Master Layout this sheet working from the entrance of the slide to the exit.

Tube sections should be rotated so the reference bosses aligns from one section to the next except for slide exit pieces. See slide exit detail next sheet.

Refer to chart on this sheet that matches Earthscape part numbers to the slide manufacturer part numbers and the manufacturer's assembly/installation package numbers. Refer to slide manufacturer's assembly/installation package for more information.

Provide temporary support for the slide as it's being assembled. Once entire slide assembled, support post will be added. See next sheet.

Do not pour concrete piers at this time.

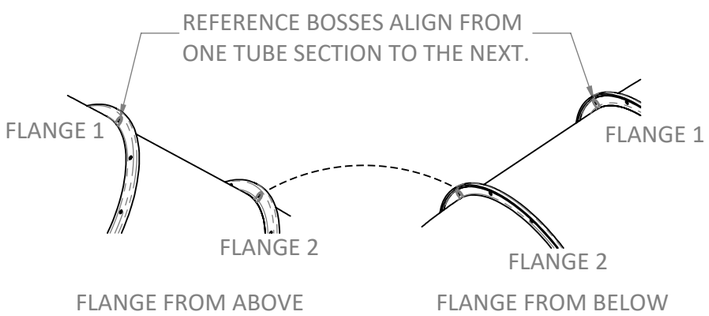

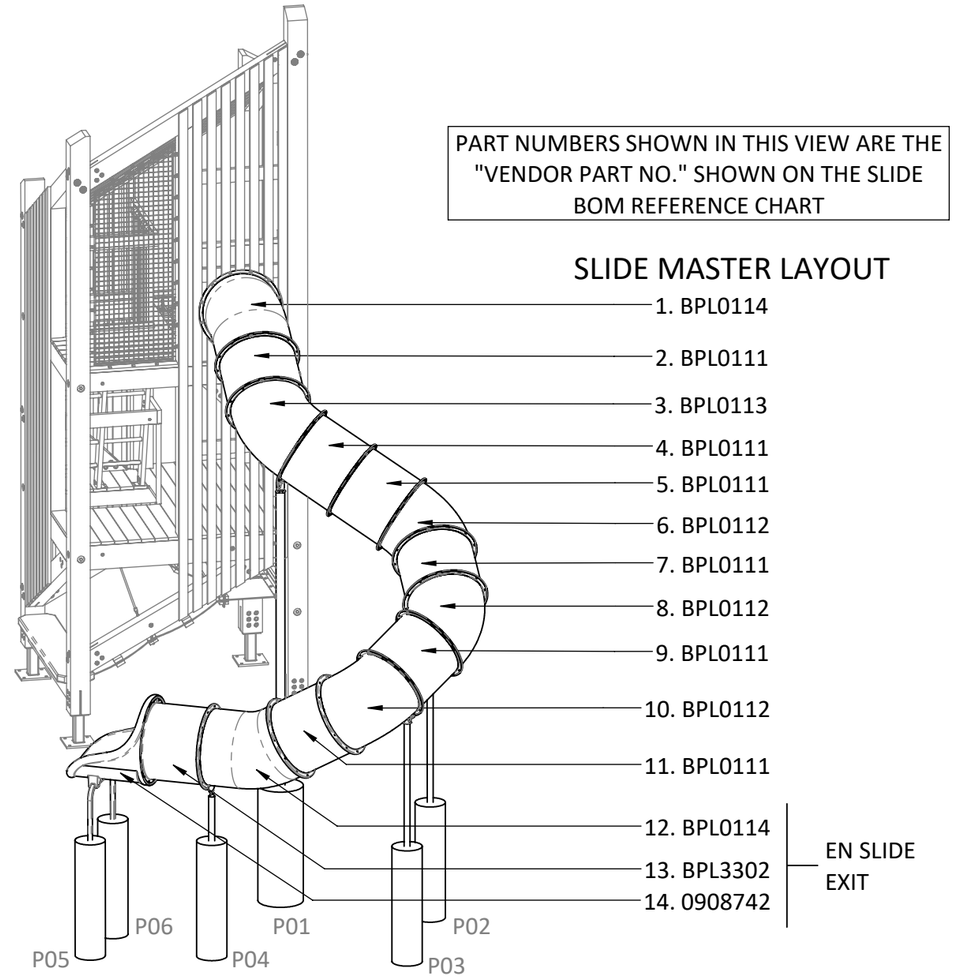

SLIDE BOM REFERENCE CHART				
EARTHSCAPE PART NO.	VENDOR PART NO.	VENDOR ASM NO.	DESCRIPTION	QTY.
SL3001	(2X) BPL0114 + (1X) BPL3302 + (1X) 0908742	ZZYYA846	CUSTOM SLIDE ENTRANCE WITH EN SLIDE EXIT - IN GROUND	1
SL3002	BPL0111	ZZUN3007	30" ROUND STRAIGHT TUBE SECTION	6
SL3004	BPL0113	ZZUN3008	30" ROUND LEFT TUBE SECTION	1
SL3005	BPL0112	ZZUN3009	30" ROUND RIGHT TUBE SECTION	3
SL3000		ZZUN3011	DO NOT CLIMB - SLIDE PANEL	1
SL3007		ZZUN3036	3FT ROUND TUBE SLIDE SUPPORT LEG - IN GROUND	1
SL3010		ZZUN3027	6FT ROUND TUBE SLIDE SUPPORT LEG - IN GROUND	1
SL3013		ZZUN3024	9FT TUBE SLIDE SUPPORT LEG - IN GROUND	1

REFER TO SLIDE MANUFACTURER'S INSTALLATION INSTRUCTIONS WHICH REFERNCE THE VENDOR ASM NO.

PROPERTY OF EARTHSCAPE PLAY INC. - DO NOT COPY. DO NOT DISTRIBUTE.

INSTALL SUPPORT POSTS

PLASTIC TUBE SLIDE - FLANGE - 12' - TURN RIGHT

STEP 6 - INSTALL SUPPORT POSTS

Secure the slide support posts to the slide with the bottom of the posts hanging in the augered holes. Support post installation as per slide manufacturer's details.

Refer to chart on the previous sheet that matches Earthscape part numbers to the slide manufacturer's assembly/installation package numbers.

Finished grade labels on support posts may be wrong. Correct heights noted on this sheet.

Do not pour concrete at this time.

STEP 7 - CHECK POSTS AND ADJUST HEIGHTS

Once all supports posts are hanging from the slide, confirm slide position by checking that all support posts are centered in the augered pier holes. Adjust slide position as needed.

With all support posts attached to the slide, adjust the temporary bracing so the support post heights match the dimensions provided on this sheet.

Slide exit height should be approximately 0.28m - 0.30m [11"-12"] above the finished play surface.

Ensure slide exit is sloped to drain water.

Pour concrete piers.

STEP 8 - REMOVE TEMPORARY SUPPORTS

Once concrete has cured remove the temporary supports.

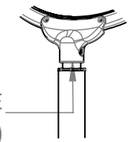

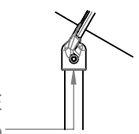

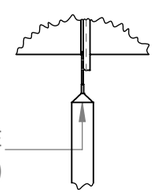

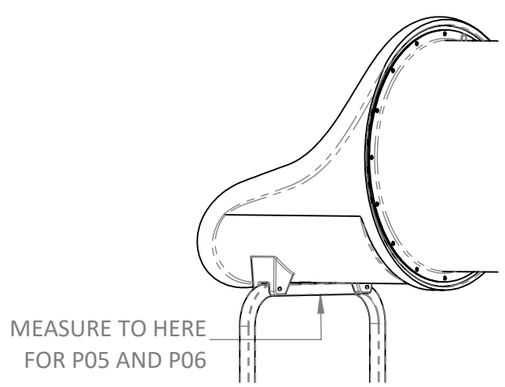

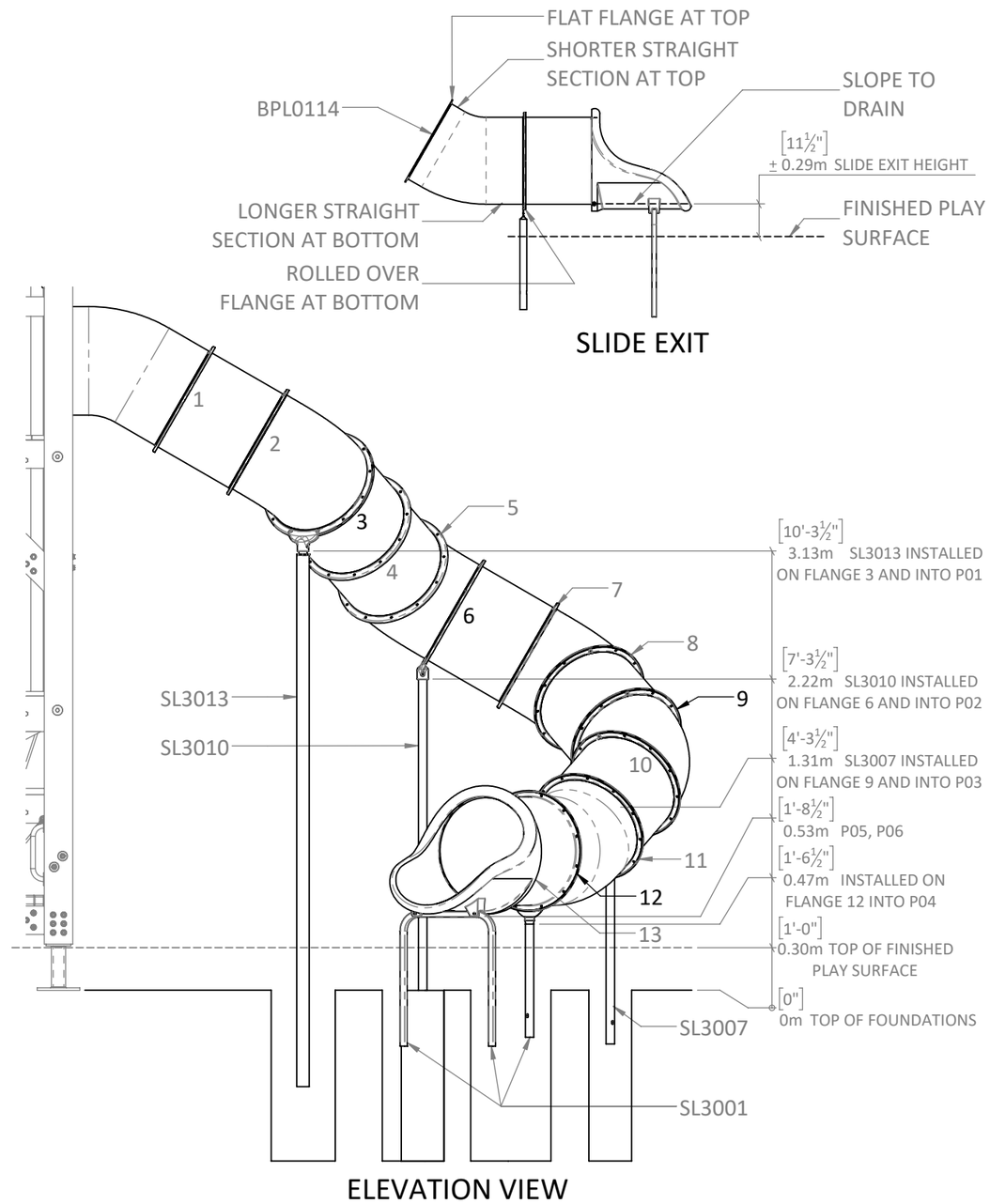

PROPERTY OF EARTHSCAPE PLAY INC. - DO NOT COPY. DO NOT DISTRIBUTE.

INSTALLATION INSTRUCTIONS

EARTHSCAPE COLLECTIONS

WITZEL DYCE
ENGINEERING INC.
PROJECT NO.: 12936-165

LICENSED PROFESSIONAL ENGINEER
M. JOHNSON
100514620
Sep 22, 2025
PROVINCE OF ONTARIO

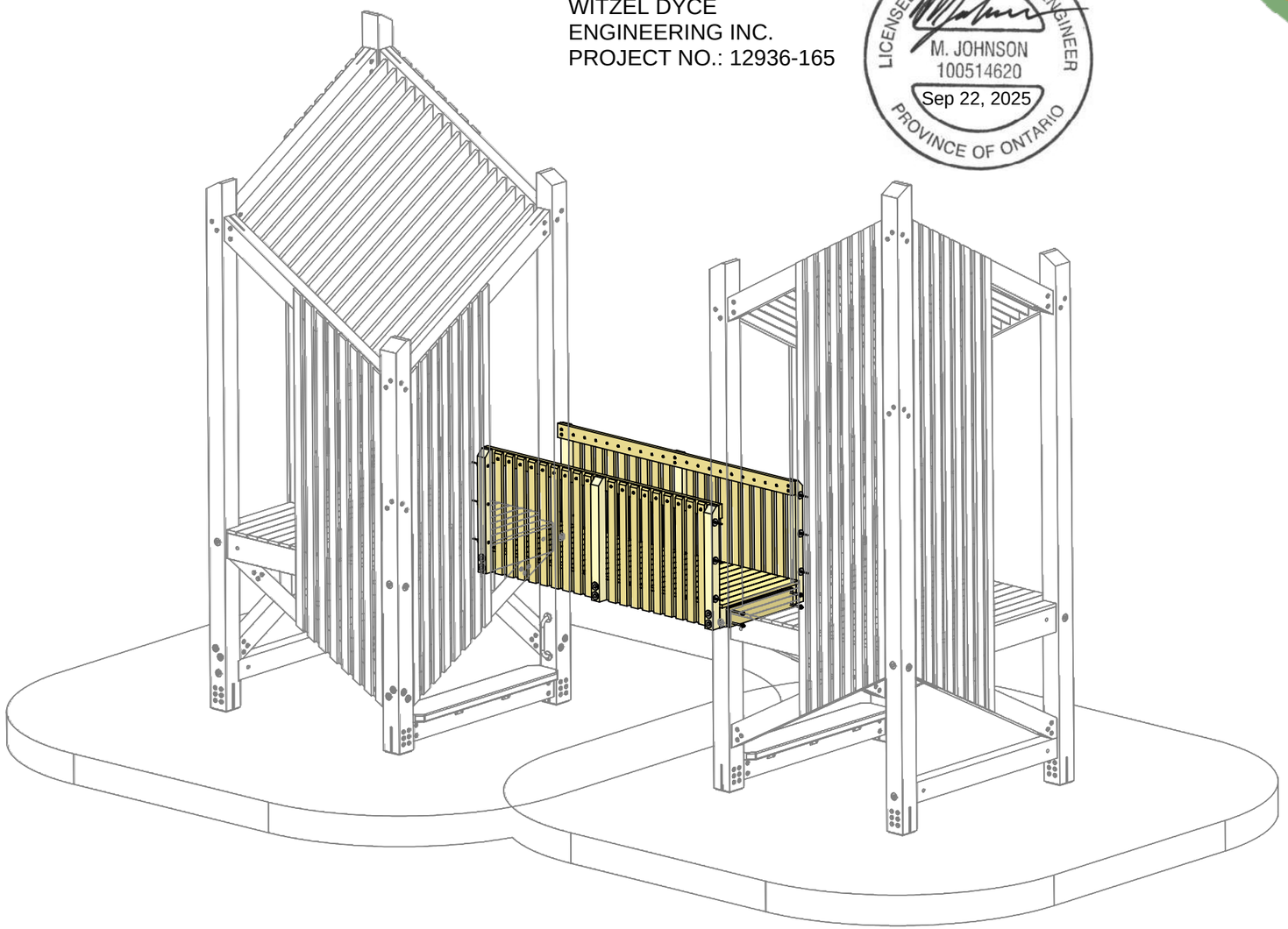

10' WOODEN BRIDGE

THESE INSTRUCTIONS APPLY TO THE FOLLOWING VERSIONS OF THIS PRODUCT:

F00363 - 10' WOODEN BRIDGE

WHICH IS DESIGNED TO BE INSTALLED ON THE FOLLOWING PRODUCTS:

F00182 - 2 LEVEL TIMBER TOWER
F00185 - 1 LEVEL TIMBER TOWER
F00407 - 2 LEVEL TIMBER TOWER
F00408 - 3 LEVEL TIMBER TOWER

NOTE: COLOURS SHOWN ARE REPRESENTATIONAL AND MAY NOT BE THE SAME AS THOSE OF THE SUPPLIED PRODUCT

FOR CSA AND ASTM SPECIFICATIONS AND GENERAL NOTES SEE MAIN STRUCTURE INSTALLATION PACKAGE

DATE DOCUMENT RELEASED 2022-05-30
DOCUMENT NUMBER: 1073001-R1

PROPERTY OF EARTHSCAPE PLAY INC. - DO NOT COPY. DO NOT DISTRIBUTE.

PLEASE READ ALL INSTRUCTIONS

Before starting to install this equipment be sure to read through and understand these instructions.

If you have any questions, contact your local dealer for assistance before proceeding.

MEASUREMENTS AND STANDARDS

Measurements have been provided in both metres and [feet-inches]. Ensure to follow standards noted for the location in which this play equipment is being installed. Those marked CSA are to be used in Canada and those marked ASTM to be used in the United States.

LIST OF ABBREVIATIONS

AYC = Alaskan Yellow Cedar
WRC = Western Red Cedar
DPS = Designated Play Surface
SS = Stainless Steel
HDG = Hot Dipped Galvanized
WWM = Welded Wire Mesh
TYP = Typical
C/W = Complete With
UNO = Unless Noted Otherwise
EWF = Engineered Wood Fiber
PIP = Poured-In-Place Rubber Surfacing
PT = Pressure Treated

TOOLS SUPPLIED WITH THIS PRODUCT

- No tools supplied

TOOLS THE INSTALLER NEEDS TO SUPPLY

- High torque drill
- Set of wood drill bits up to 1/2"
- T25 drive bit
- T40 drive bit
- Circular saw
- Transit or laser Level
- Rigging and lifting straps

EQUIPMENT THE INSTALLER NEEDS TO SUPPLY

- Machine to lift and position 300 kg [670 lb] pre-assembled wooden bridge.

INSTALLER CREW AND TIME REQUIRED

Number of people needed: 3
Typical total person-hours to install: 3

Time breakdown:
- 1 hours x 3 people to position and anchor the bridge in place

MATERIALS THE INSTALLER NEEDS TO SUPPLY

- No additional materails required

WARNINGS

These instructions do not provide specific guidance on the use of tools or the lifting and moving heavy objects. It is assumed that competent people are installing this product who are familiar with using the tools and equipment required and are knowledgeable and skilled at lifting and positioning heavy objects.

PROPERTY OF EARTHSCAPE PLAY INC. - DO NOT COPY. DO NOT DISTRIBUTE.

MAKE SURE YOU HAVE ALL THE PARTS

Examine the equipment and ensure you have all the required parts listed in the table below.

PART IMAGE	ITEM NO.	PART NO.	DESCRIPTION	QTY.
	1	H16687	ASSY SK A2 8mm X 200mm SS	12
	2	H16685	ASSY SK A2 8mm X 100mm SS	8
SEE IMAGE THIS SHEET	3	F00363	PRE-ASSEMBLED WOODEN BRIDGE 10'	1

IMAGES OF FASTENERS IN THIS TABLE ARE REPRESENTATIONAL TO HELP IDENTIFY PARTS.

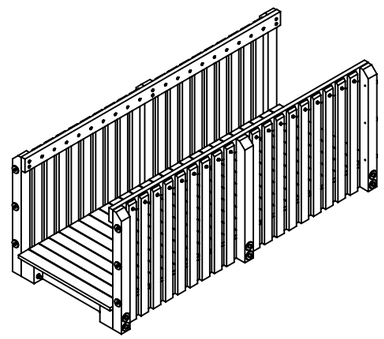

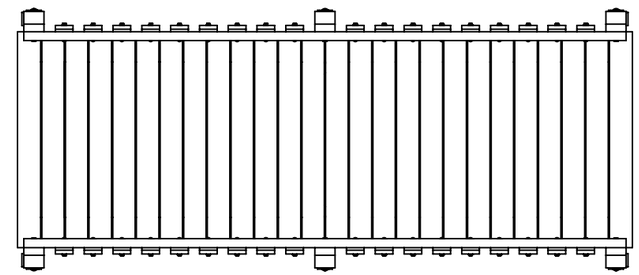

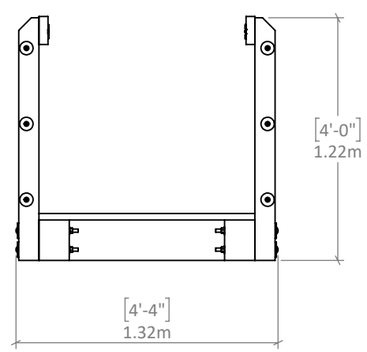

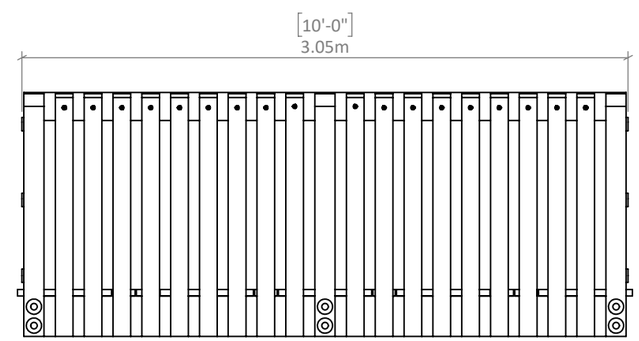

TIMBER BRIDGE SHIPPED PRE-ASSEMBLED AS SHOWN

PROPERTY OF EARTHSCAPE PLAY INC. - DO NOT COPY. DO NOT DISTRIBUTE.

STEP 1 - CONFIRM WHERE THE ACCESSORY IS TO BE INSTALLED

Review the complete tower installation package to determine on which side this accessory is to be installed and what the finished product should look like. The images shown on this page are representational and may not match your exact installation.

STEP 2 - INSTALL BRIDGE PRIOR TO ANCHORING TOWERS TO FOUNDATION PAD.

It might be necessary to make minor adjustments the position of the timber towers to suit the as-built bridge. Anchors towers after bridge has been installed.

STEP 3 - PREP BRIDGE AND CONFIRM GAP BETWEEN TOWERS IS SLIGHTLY LARGER THEN THE BRIDGE IS LONG.

Temporarily remove the end deckboard from both ends of bridge as per Figure 1. Make sure to note which end they came from and their orientation.

Measure distance between towers and compare to supplied bridge length. Pull towers away from each other enough to be able to fit bridge between.

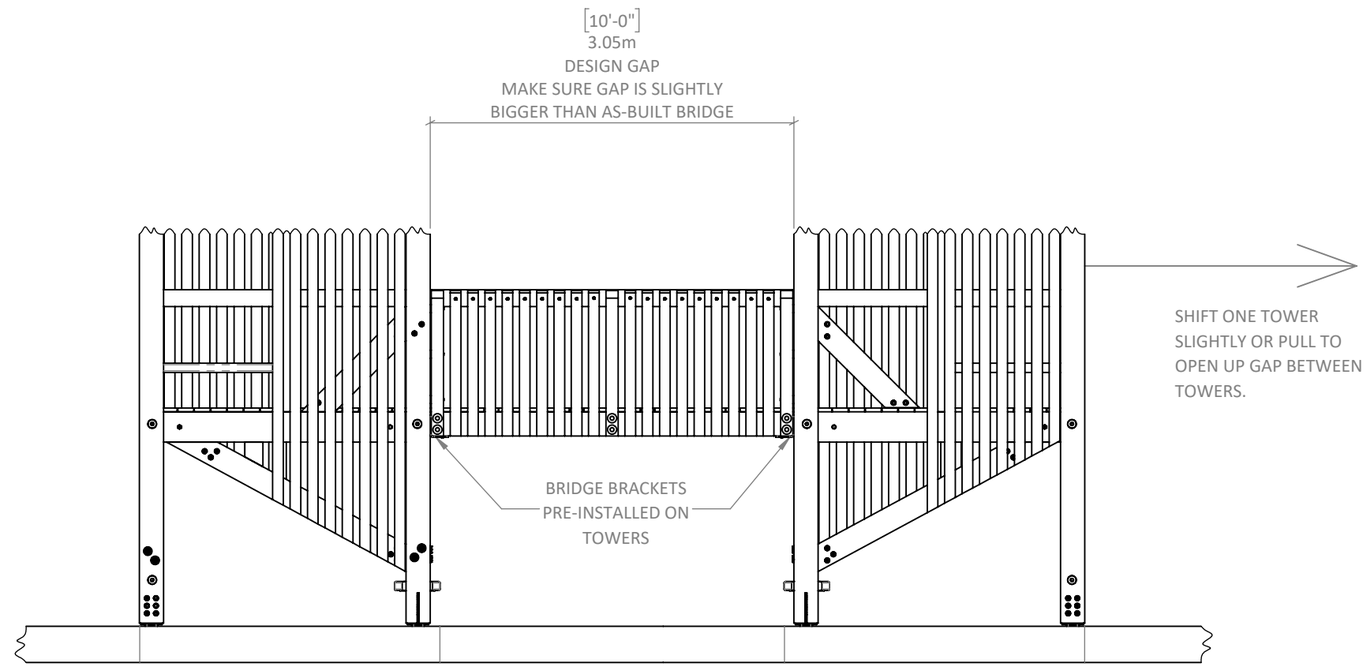

SAMPLE ELEVATION

(ACTUAL INSTALLATION MIGHT DIFFER FROM THIS VIEW. CHECK MAIN INSTALLTION PACKAGE TO SEE PORJECT SPECIFIC ARRANGMENT OF BRIDGE AND TOWERS

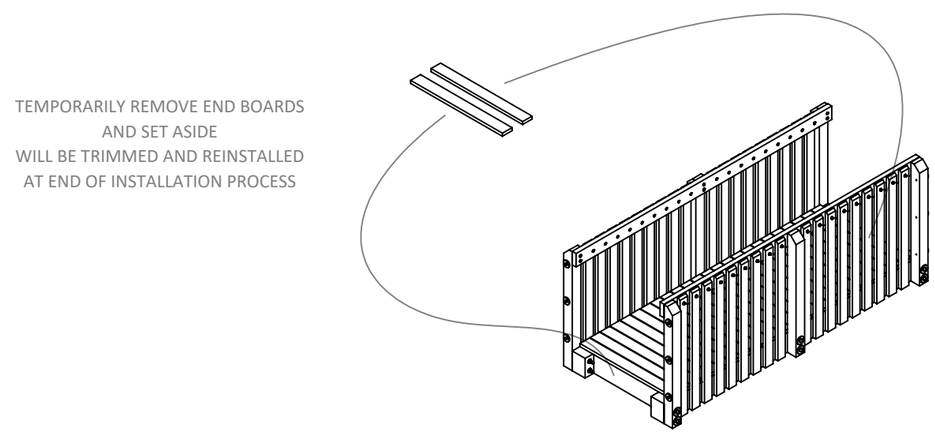

FIGURE 1

PROPERTY OF EARTHSCAPE PLAY INC. - DO NOT COPY. DO NOT DISTRIBUTE.

BRIDGE INSTALLATION 2 OF 3

10' WOODEN BRIDGE

STEP 4 - LIFT AND PLACE BRIDGE

Lift bridge with apporpriate equipment and move into position.
Lower bridge on to the 2 brackets pre-installed on the timber towers ensuring the bridge is centered in the tower opening.

STEP 5 - ADJUST POSITION OF TOWERS

Draw towers together so they are tight to the ends of the bridge.
Make minor adjustments to tower position to ensure both ends of bridge are centered in tower opening and that towers are tight to the end of the bridge.

STEP 6 - SECURE BRIDGE GUARDRAIL POSTS

Install screws through pre-dilled holes in end guardrail posts into timber tower posts.

Pre-drill all screw holes as per general notes.

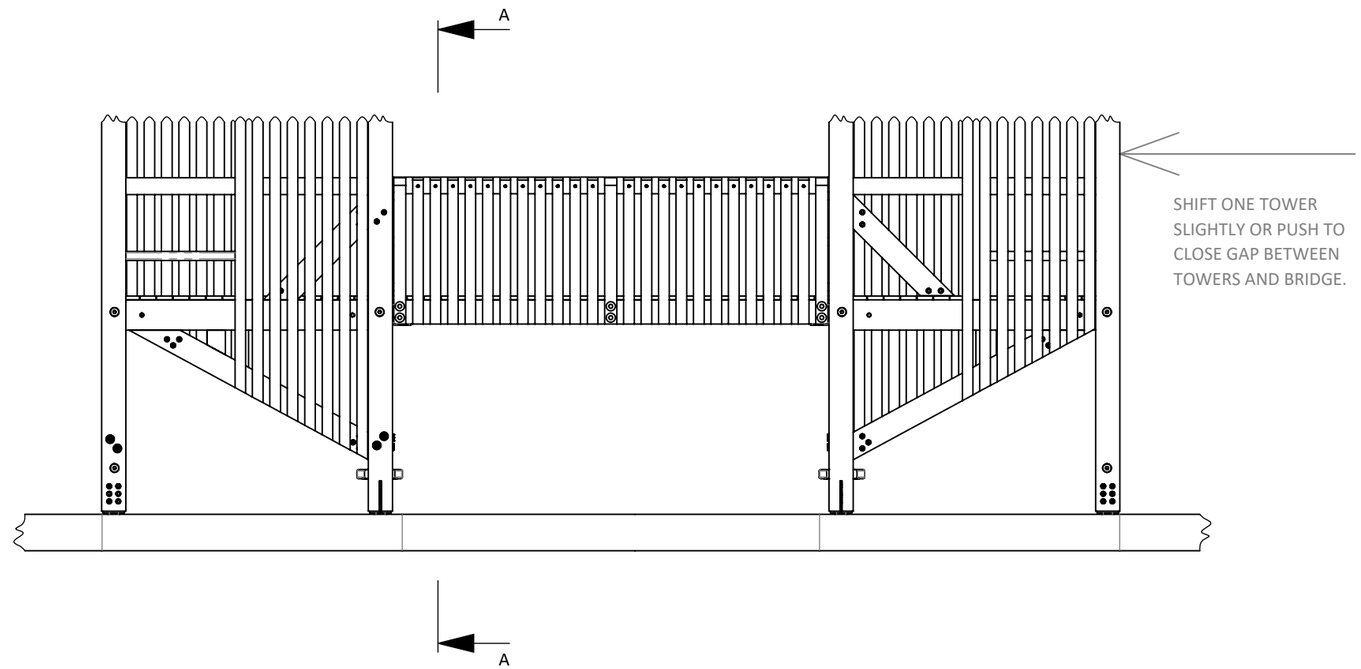

SAMPLE ELEVATION

(ACTUAL INSTALLATION MIGHT DIFFER FROM THIS VIEW. CHECK MAIN INSTALLTION PACKAGE TO SEE PORJECT SPECIFIC ARRANGMENT OF BRIDGE AND TOWERS

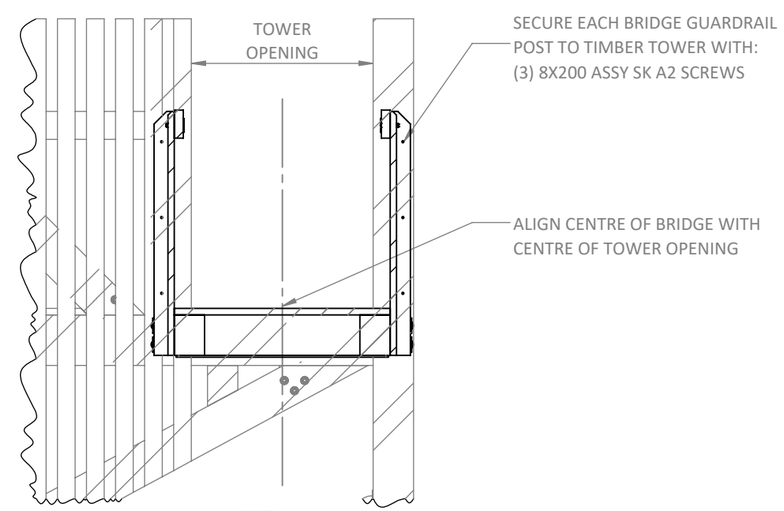

SECTION A-A

PROPERTY OF EARTHSCAPE PLAY INC. - DO NOT COPY. DO NOT DISTRIBUTE.

STEP 7 - SECURE BRIDGE STRINGERS

Install screws through bottom of steel brackets into underside of bridge timber stringers.

Pre-drill all screw holes as per general notes.

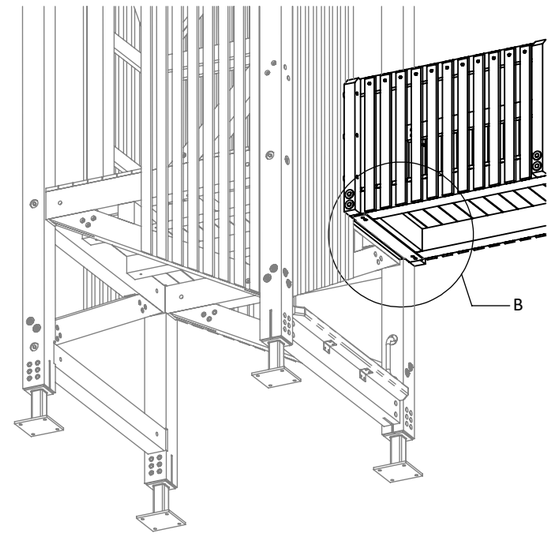

LOOKING UNDER BRIDGE

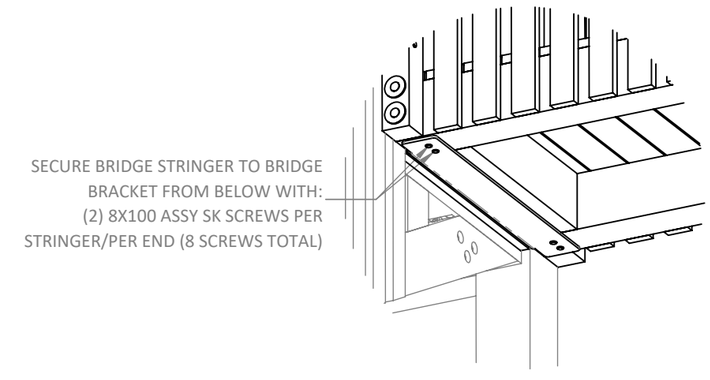

DETAIL B

STEP 8 - REINSTALL DECKBOARDS

Trim the removed deckboards to suit the gap in decking between the bridge and tower.

Ensure a +/-6mm (1/4") gap between deckboards as per Figure 2. Deckboards must not touch. Reinstall with the original screws.

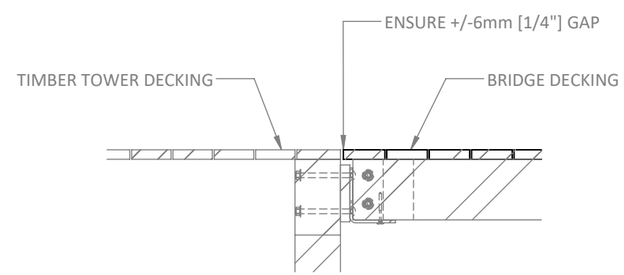

FIGURE 2

PROPERTY OF EARTHSCAPE PLAY INC. - DO NOT COPY. DO NOT DISTRIBUTE.

INSTALLATION INSTRUCTIONS

EARTHSCAPE COLLECTIONS

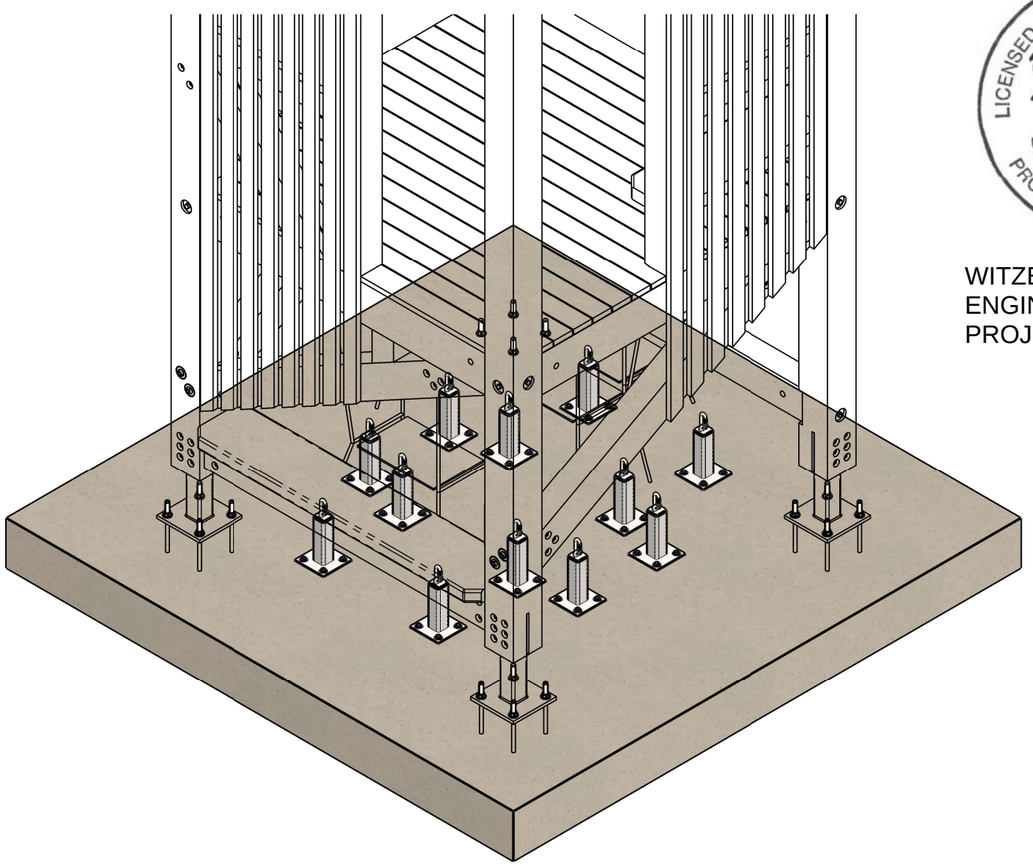

WITZEL DYCE
ENGINEERING INC.
PROJECT NO.: 12936-165

SLING SEATS - PIP

THESE INSTRUCTIONS APPLY TO THE FOLLOWING VERSIONS OF THIS PRODUCT:

F00403 - SLING SEATS - PIP

NOTE: COLOURS SHOWN ARE REPRESENTATIONAL AND MAY NOT BE THE SAME AS THOSE OF THE SUPPLIED PRODUCT

DATE DOCUMENT RELEASED 2022-06-05
DOCUMENT NUMBER: 1073938-R1

PROPERTY OF EARTHSCAPE PLAY INC. - DO NOT COPY. DO NOT DISTRIBUTE.

PLEASE READ ALL INSTRUCTIONS

Before starting to install this equipment be sure to read through and understand these instructions.

If you have any questions, contact your local dealer for assistance before proceeding.

MEASUREMENTS AND STANDARDS

Measurements have been provided in both metres and [feet-inches]. Ensure to follow standards noted for the location in which this play equipment is being installed. Those marked CSA are to be used in Canada and those marked ASTM to be used in the United States.

LIST OF ABBREVIATIONS

AYC = Alaskan Yellow Cedar
WRC = Western Red Cedar
DPS = Designated Play Surface
SS = Stainless Steel
HDG = Hot Dipped Galvanized
WWM = Welded Wire Mesh
TYP = Typical
C/W = Complete With
UNO = Unless Noted Otherwise
EWF = Engineered Wood Fiber
PIP = Poured-In-Place Rubber Surfacing
PT = Pressure Treated

TOOLS SUPPLIED WITH THIS PRODUCT

- No tools supplied

TOOLS THE INSTALLER NEEDS TO SUPPLY

- High torque drill
- 1/2" impact driver
- Set of socket - up to 3/4"
- Hammer drill
- Concrete drill bit, 1/2" x 8"
- Transit or Laser Level
- Rigging and lifting straps

EQUIPMENT THE INSTALLER NEEDS TO SUPPLY

- None

INSTALLER CREW AND TIME REQUIRED

Number of people needed: 2
Typical total person-hours to install: 4 hours
Time breakdown:

- 2 hours x 2 people for onsite fabrication and play equipment installation

MATERIALS THE INSTALLER NEEDS TO SUPPLY

- Threadmate threadlocker Vibra-Tite VC-3 (or equal)

WARNINGS

These instructions do not provide specific guidance on the use of tools or the lifting and moving heavy objects. It is assumed that competent people are installing this product who are familiar with using the tools and equipment required and are knowledgeable and skilled at lifting and positioning heavy objects.

PROPERTY OF EARTHSCAPE PLAY INC. - DO NOT COPY. DO NOT DISTRIBUTE.

MAKE SURE YOU HAVE ALL THE PARTS

Examine the equipment and ensure you have all the required parts listed in the table below.

PART IMAGE	ITEM NO.	PART NO.	DESCRIPTION	QTY.
SEE IMAGE THIS SHEET	1	B00022	CLIMBING NET ATTACHMENT POST - SURFACE MOUNT	12
	2	H30020	WASHER 1/2" X 1-3/8" SS	48
NO IMAGE PROVIDED	3	H60001	WELDED CHAIN 316 SS 0.375IN X 36IN LONG	12
	4	H60018	QUICK LINK 3/8" SS 316	12
	5	H60020	TITEN HD 1/2" X 5" CONCRETE SCREW	48

IMAGES OF FASTENERS IN THIS TABLE ARE REPRESENTATIONAL TO HELP IDENTIFY PARTS.

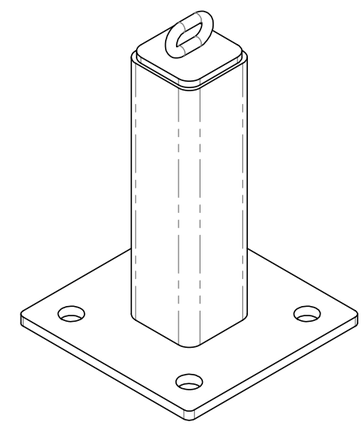

B00022 - CLIMBING NET ATTACHMENT POST

PROPERTY OF EARTHSCAPE PLAY INC. - DO NOT COPY. DO NOT DISTRIBUTE.

LOCATE PLAY EQUIPMENT

SLING SEATS - PIP

STEP 1 - LOCATING THE EQUIPMENT ON SITE

Layout the edges of the 12 Net Attachment Posts relative to the 1 level tower corner post base bracekts. Ensure you reference the correct side of the tower.

STEP 2 - SECURE BRACKETS TO CONCRETE FOUNDATION

Secure the bottom of the sling seat ropes (pre-installed on 1 level tower) to the Climbing Net Attachment Post as per Detail A this sheet.

Include 3/8" chain and quicklink as noted. Adjust length of chain as needed. Cut and dispose of excess.

STEP 3 - PIP SURFACING

Layout and installation of PIP surfacing is beyond the scope of these instructions, however, please refere to Typical PIP Surface Detail this sheet to see the intended cross section of the play surface relative to the Net Attachment Post bracket.

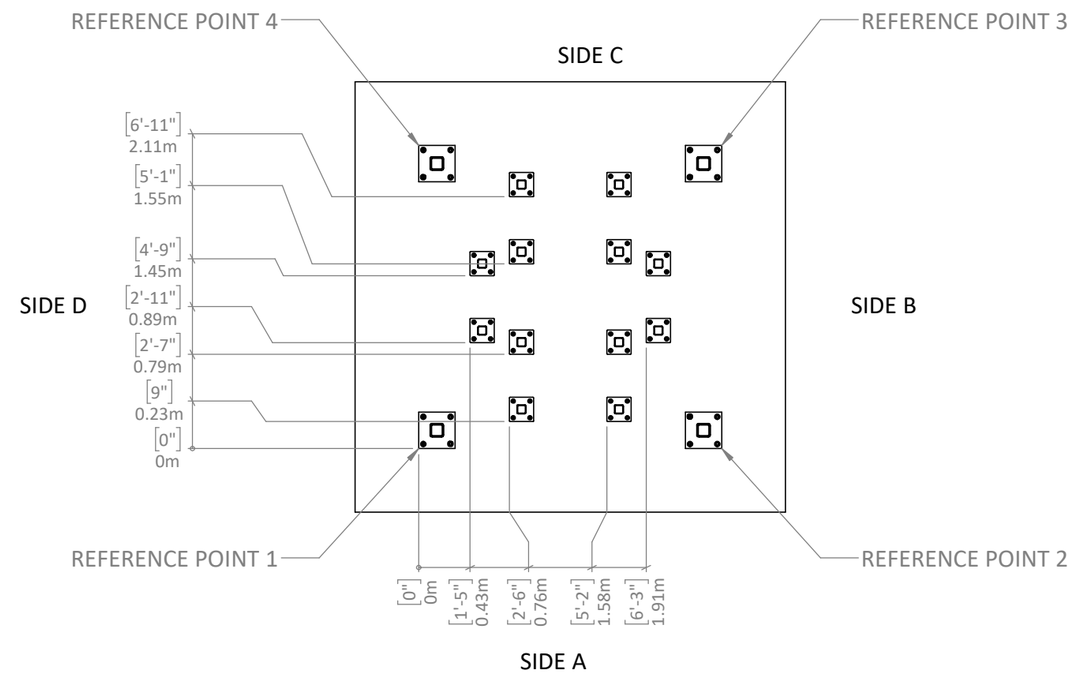

NET ATTACHMENT POST LAYOUT

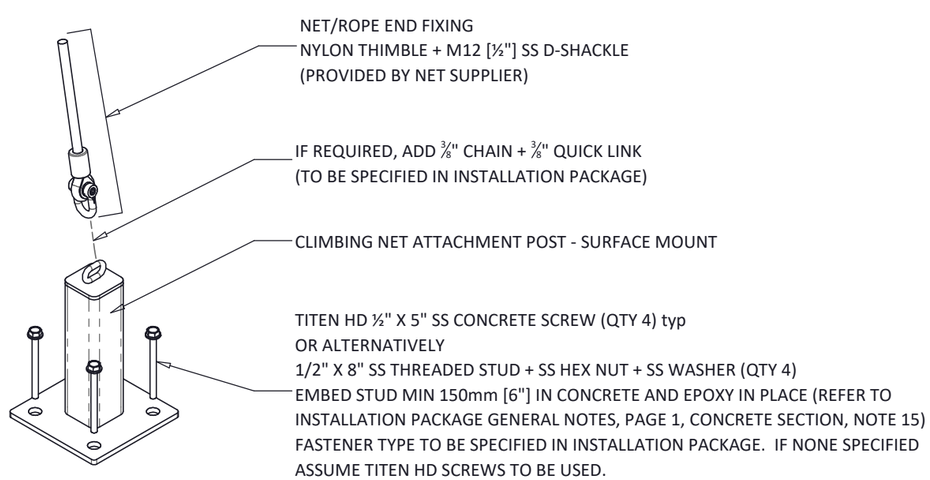

DETAIL A

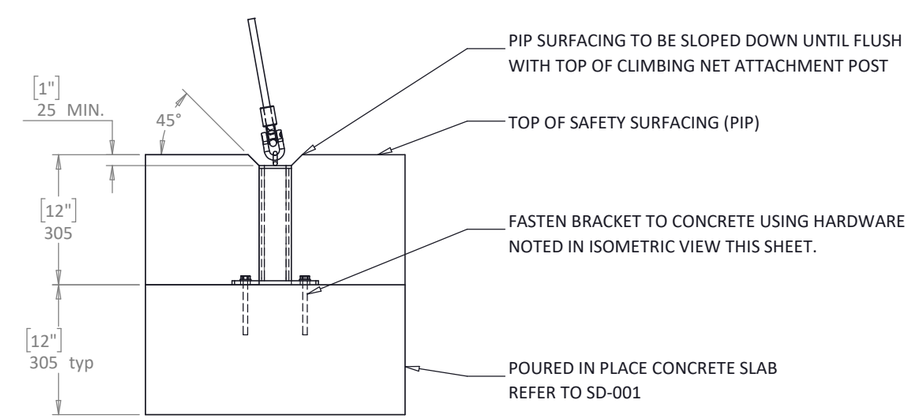

TYPICAL PIP SURFACING DETAIL

PROPERTY OF EARTHSCAPE PLAY INC. - DO NOT COPY. DO NOT DISTRIBUTE.

INSTALLATION INSTRUCTIONS

EARTHSCAPE COLLECTIONS

WITZEL DYCE
ENGINEERING INC.
PROJECT NO.: 12936-165

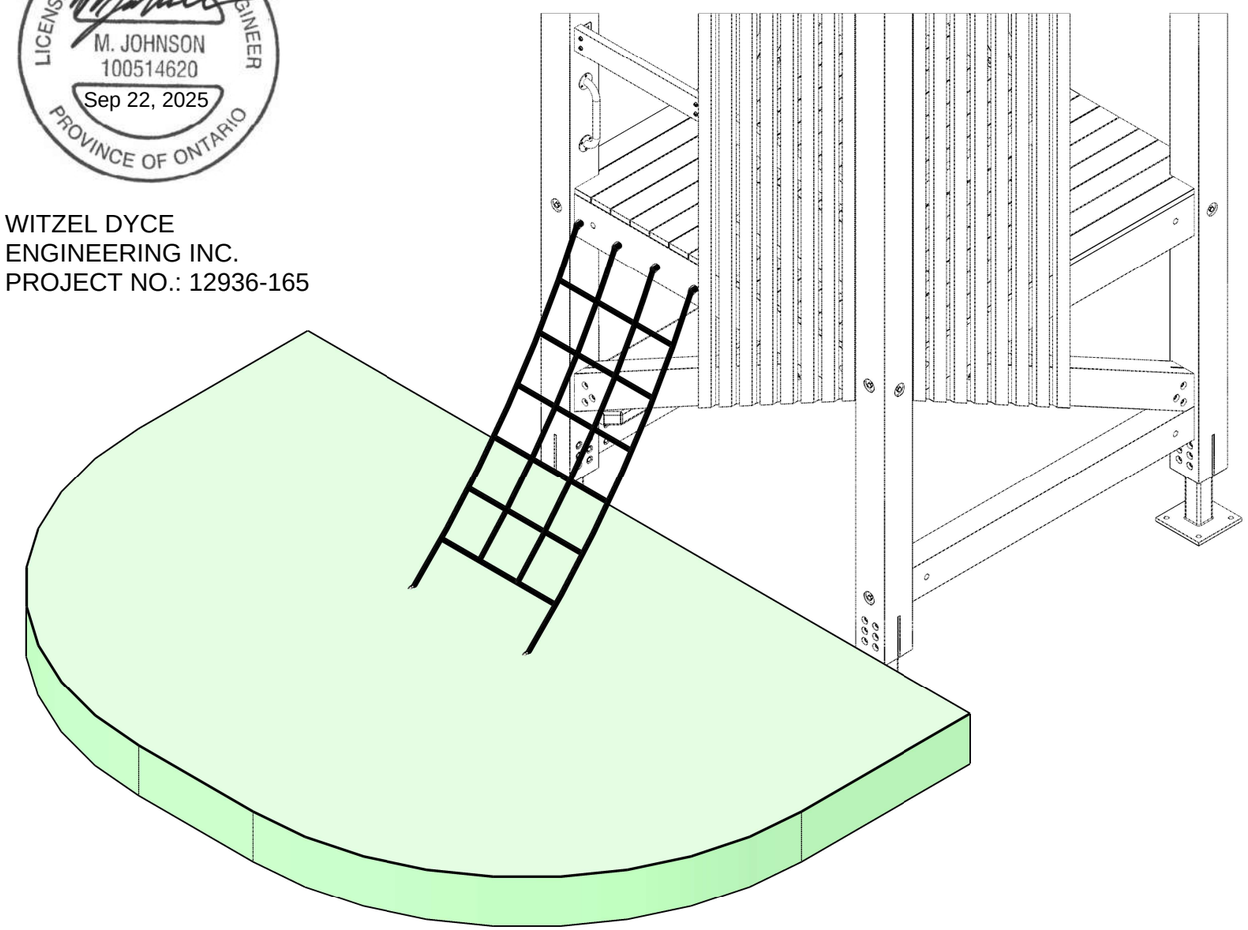

SAMPLE ISOMETRIC
(MAY NOT MATCH PROJECT SPECIFIC LOCATION OF SUB-ASSEMBLY)

ACCESS CLIMBING NET - PIP

THESE INSTRUCTIONS APPLY TO THE FOLLOWING VERSIONS OF THIS PRODUCT:

F00405 - ACCESS CLIMBING NET - PIP

WHICH IS DESIGNED TO BE INSTALLED ON THE FOLLOWING PRODUCTS:

F00185 - 1 LEVEL TIMBER TOWER
F00407 - 2 LEVEL TIMBER TOWER
F00408 - 3 LEVEL TIMBER TOWER

NOTE: COLOURS SHOWN ARE REPRESENTATIONAL AND MAY NOT BE THE SAME AS THOSE OF THE SUPPLIED PRODUCT

FOR CSA AND ASTM SPECIFICATIONS AND GENERAL NOTES SEE MAIN STRUCTURE INSTALLATION PACKAGE

DATE DOCUMENT RELEASED 2022-06-05
DOCUMENT NUMBER: 1073937-R1

PROPERTY OF EARTHSCAPE PLAY INC. - DO NOT COPY. DO NOT DISTRIBUTE.

PLEASE READ ALL INSTRUCTIONS

Before starting to install this equipment be sure to read through and understand these instructions.

If you have any questions, contact your local dealer for assistance before proceeding.

MEASUREMENTS AND STANDARDS

Measurements have been provided in both millimeters and [feet-inches]. Ensure to follow standards noted for the location in which this play equipment is being installed. Those marked CSA are to be used in Canada and those marked ASTM to be used in the United States.

LIST OF ABBREVIATIONS

AYC = Alaskan Yellow Cedar
WRC = Western Red Cedar
DPS = Designated Play Surface
SS = Stainless Steel
HDG = Hot Dipped Galvanized
WWM = Welded Wire Mesh
TYP = Typical
C/W = Complete With
UNO = Unless Noted Otherwise
EWF = Engineered Wood Fiber
PIP = Poured-In-Place Rubber Surfacing
PT = Pressure Treated

TOOLS SUPPLIED WITH THIS PRODUCT

- None supplied

TOOLS THE INSTALLER NEEDS TO SUPPLY

- Hammer drill
- Set of concrete drill bits - diameter and length as needed to install concrete screws
- High torque drill
- 1/2" ratcheting socket wrench
- Socket set up to 3/4"

EQUIPMENT THE INSTALLER NEEDS TO SUPPLY

- None

INSTALLER CREW AND TIME REQUIRED

Number of people needed: 2
Typical total person-hours to install: 2

Time breakdown:
- 1 hour x 2 person for onsite fabrication and play equipment installation

MATERIALS THE INSTALLER NEEDS TO SUPPLY

- Threadmate threadlocker Vibra-Tite VC-3 (or equal)

WARNINGS

These instructions do not provide specific guidance on the use of tools or the lifting and moving heavy objects. It is assumed that competent people are installing this product who are familiar with using the tools and equipment required and are knowledgeable and skilled at lifting and positioning heavy objects.

PROPERTY OF EARTHSCAPE PLAY INC. - DO NOT COPY. DO NOT DISTRIBUTE.

MAKE SURE YOU HAVE ALL THE PARTS

Examine the equipment and ensure you have all the required parts listed in the table below.

Access net comes pre-installed on tower.

PART IMAGE	ITEM NO.	PART NO.	DESCRIPTION	QTY.
SEE IMAGE THIS SHEET	1	B00022	CLIMBING NET ATTACHMENT POST - SURFACE MOUNT	2
	2	H30020	WASHER 1/2" X 1-3/8" SS	8
	3	H60020	TITEN HD 1/2" X 5" CONCRETE SCREW	8

IMAGES OF FASTENERS IN THIS TABLE ARE REPRESENTATIONAL TO HELP IDENTIFY PARTS.

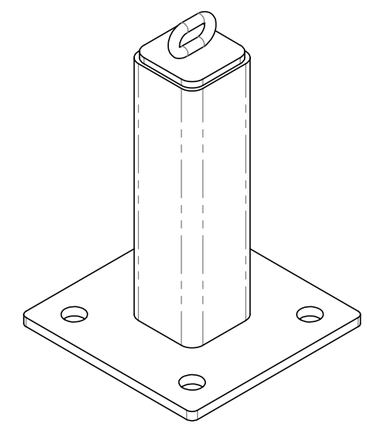

B00022 - CLIMBING NET ATTACHMENT POST

PROPERTY OF EARTHSCAPE PLAY INC. - DO NOT COPY. DO NOT DISTRIBUTE.

FINISHED PRODUCT

ACCESS CLIMBING NET - PIP

WHAT THE FINISHED PRODUCT LOOKS LIKE

Finished play surface and concrete foundations by Installer.

Foundation layout and details not shown in this package. Please review the main tower installation package for this information.

Views on this sheet may not match project specific location of the add-on accessory. It could be on a different side of the tower.
Review main tower installation package to see the position of this add-on for your specific project.

Layout and installation of PIP surfacing is beyond the scope of these instructions, however, please refere to Typical PIP Surface Detail this sheet to see the intended cross section of the play surface relative to the Net Attachment Post bracket.

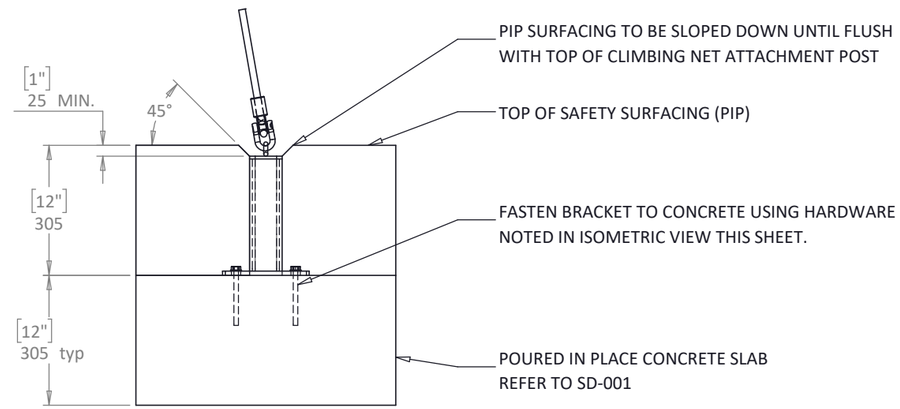

TYPICAL PIP SURFACE DETAIL

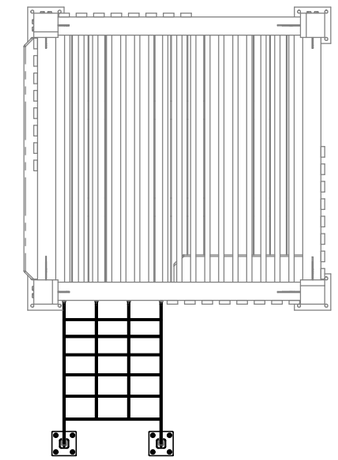

PLAN VIEW

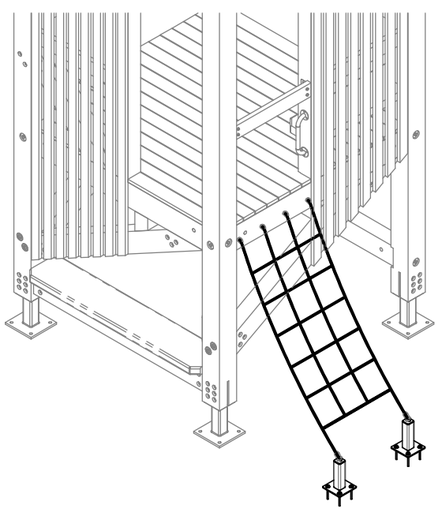

ISOMETRIC VIEW

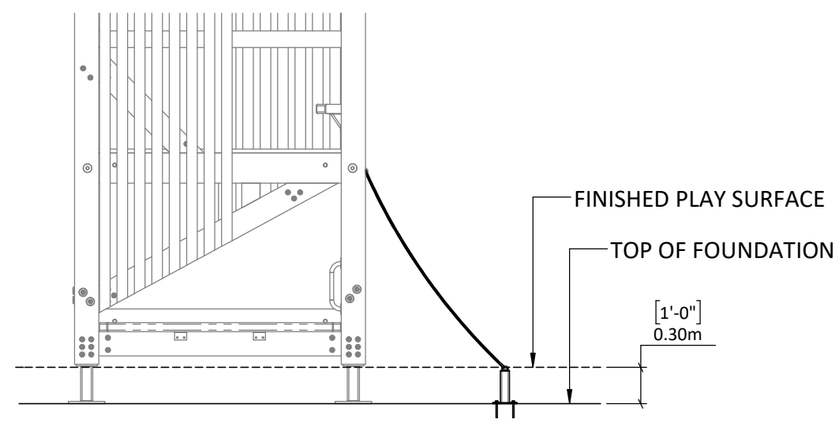

SIDE VIEW

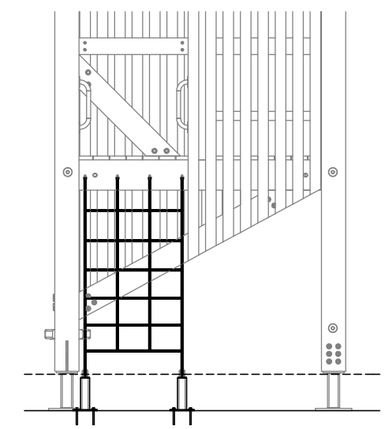

FRONT VIEW

PROPERTY OF EARTHSCAPE PLAY INC. - DO NOT COPY. DO NOT DISTRIBUTE.

LOCATE PLAY EQUIPMENT

ACCESS CLIMBING NET - PIP

STEP 1 - NET FOUNDATION

The concrete foundation needed for this add-on is illustrated in the main tower installation package and can vary from project to project. See main tower installation package for more information.

STEP 2 - PREPARE NET

Top end of net is pre-installed on tower. Unpack the net so it is hanging from the tower.

STEP 3 - LAYOUT CLIMBING NET ATTACHEMENT POSTS

Layout the position of the Climbing Net Attachment Post brackets as per the main tower installation package.

STEP 4 - CONNECT NET TO TOP OF POSTS

Connect the bottom end of the climbing net to the Attachement Posts as per Detail A this sheet.

STEP 5 - ADJUST ATTACHMENT POST POSITION AND SECURE TO CONCRETE PAD

Position the Attachement Posts to align with the layout marks and then check the tension in the net as noted in the Sample Elevation View this sheet.

If there is not enough sag, shift the attachment posts towards or away from the tower as needed until the correct sag is achiaved.

Secure the Attachment Posts to the pad with concrete screws as noted in Detail A this sheet.

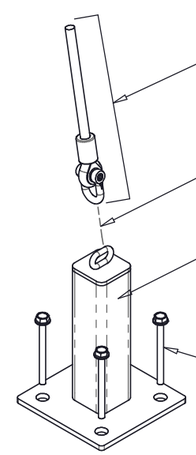

NET/ROPE END FIXING
NYLON THIMBLE + M12 [½"] SS D-SHACKLE
(PROVIDED BY NET SUPPLIER)

IF REQUIRED, ADD ⅜" CHAIN + ⅜" QUICK LINK
(TO BE SPECIFIED IN INSTALLATION PACKAGE)

CLIMBING NET ATTACHMENT POST - SURFACE MOUNT

TITEN HD ½" X 5" SS CONCRETE SCREW (QTY 4) typ
OR ALTERNATIVELY
1/2" X 8" SS THREADED STUD + SS HEX NUT + SS WASHER (QTY 4)
EMBED STUD MIN 150mm [6"] IN CONCRETE AND EPOXY IN PLACE (REFER TO INSTALLATION PACKAGE GENERAL NOTES, PAGE 1, CONCRETE SECTION, NOTE 15)
FASTENER TYPE TO BE SPECIFIED IN INSTALLATION PACKAGE. IF NONE SPECIFIED ASSUME TITEN HD SCREWS TO BE USED.

DETAIL A

APPLY THREADLOCK TO SECURE ALL SCREW CONNECTIONS

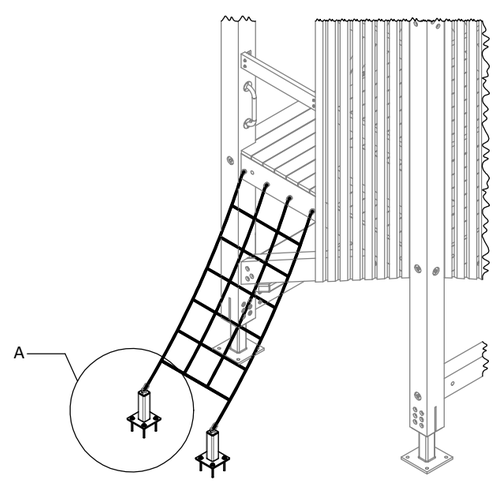

SAMPLE ISOMETRIC
(MAY NOT MATCH PROJECT SPECIFIC LOCATION OF SUB-ASSEMBLY)

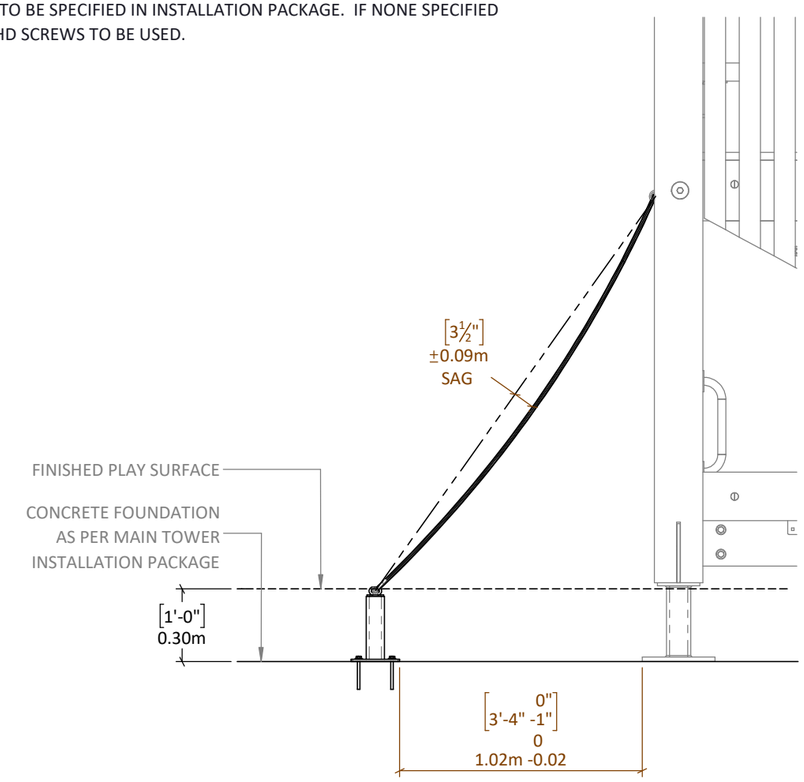

SAMPLE ELEVATION VIEW

Map of Targeted Areas and Species for Plant Management
Hurld Park Climate Resiliency Hub
Woburn, MA
March 2024

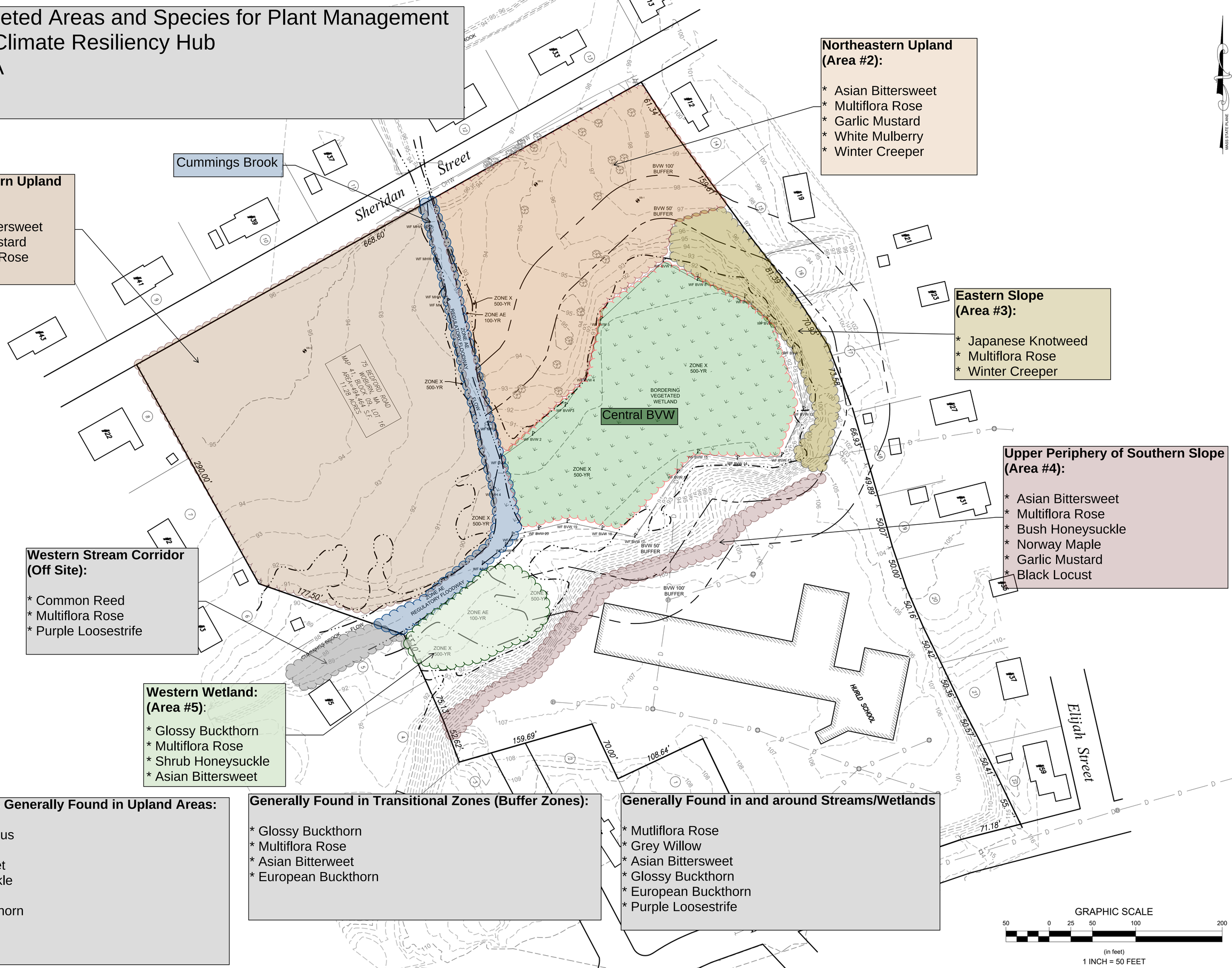

Northeastern Upland (Area #2):

* Asian Bittersweet
* Multiflora Rose
* Garlic Mustard
* White Mulberry
* Winter Creeper

Northwestern Upland (Area #1):

* Asian Bittersweet
* Garlic Mustard
* Multiflora Rose

Eastern Slope (Area #3):

* Japanese Knotweed
* Multiflora Rose
* Winter Creeper

Upper Periphery of Southern Slope (Area #4):

* Asian Bittersweet
* Multiflora Rose
* Bush Honeysuckle
* Norway Maple
* Garlic Mustard
* Black Locust

Western Stream Corridor (Off Site):

* Common Reed
* Multiflora Rose
* Purple Loosestrife

Western Wetland: (Area #5):

* Glossy Buckthorn
* Multiflora Rose
* Shrub Honeysuckle
* Asian Bittersweet

Invasive Species Generally Found in Upland Areas:

* Winged Euonymus
* Multiflora Rose
* Asian Bittersweet
* Bush Honeysuckle
* Garlic Mustard
* European Buckthorn
* Norway Maple
* Tree of Heaven

Generally Found in Transitional Zones (Buffer Zones):

* Glossy Buckthorn
* Multiflora Rose
* Asian Bitterweet
* European Buckthorn

Generally Found in and around Streams/Wetlands

* Mutliflora Rose
* Grey Willow
* Asian Bittersweet
* Glossy Buckthorn
* European Buckthorn
* Purple Loosestrife

GRAPHIC SCALE

50 0 25 50 100 200

(in feet)

1 INCH = 50 FEET

SPECIFICATIONS FOR CONSTRUCTION

1 GENERAL NOTES

1.1 THESE DESIGN DOCUMENTS WERE PREPARED BY 'VORTEX AQUATIC STRUCTURES INTERNATIONAL' FOR THE USE OF THEIR CLIENT ONLY. THE MATERIAL USED AND IDENTIFIED IN THEM REFLECTS VORTEX AQUATIC STRUCTURES INTERNATIONAL'S BEST JUDGMENT IN LIGHT OF THE INFORMATION AVAILABLE AT THE TIME OF PREPARATION. FOR THE PURPOSE OF THESE DESIGN DOCUMENTS, 'VORTEX AQUATIC STRUCTURES INTERNATIONAL' IS SYNONYMOUS WITH 'VORTEX'.

1.2 VORTEX ACCEPTS NO RESPONSIBILITY FOR DAMAGES, IF ANY, SUFFERED BY ANY THIRD PARTY AS A RESULT OF DECISIONS MADE OR ACTIONS BASED ON THESE DESIGN DOCUMENTS WITHOUT THE PREVIOUS CONSULTATION TO VORTEX.

1.3 ALL WORK, MATERIALS AND THEIR ASSEMBLIES SHALL CONFORM TO THE STANDARDS, REGULATIONS AND CODES CURRENTLY IN FORCE FOR ALL TRADES, AISC, ACNOR, EN, OR IBC.

1.4 THESE DESIGN DOCUMENTS DO NOT INDICATE THE METHOD OR MEANS OF CONSTRUCTION. WHEN APPLICABLE, THE CONTRACTORS SHALL SUPERVISE AND DIRECT ALL THE WORK AND SHALL BE SOLELY RESPONSIBLE FOR ALL CONSTRUCTION MEANS, METHODS, PROCEDURES AND SEQUENCES AS PER STANDARD BEST PRACTICES.

1.5 DO NOT SCALE DRAWINGS.

1.6 USE ONLY THOSE MARKED "ISSUED FOR CONSTRUCTION".

1.7 THE CONTRACTOR SHALL REVIEW THESE DESIGN DOCUMENTS AND REPORT ANY CONFLICTS OR OMISSIONS TO THE VORTEX IMMEDIATELY.

1.8 TEMPORARY SUPPORTS, WHICH WILL BE REQUIRED DURING CONSTRUCTION, SUCH AS FORMWORK, BRACING, SHORING, ETC. ARE NOT SHOWN ON THESE DRAWINGS AND ARE THE RESPONSIBILITY OF THE CONTRACTOR. THE CONTRACTOR IS RESPONSIBLE TO ENSURE THAT ALL SAFE CONSTRUCTION PROCEDURES ARE FOLLOWED.

1.9 THE FOLLOWING SPECIFICATIONS ARE VORTEX'S MINIMUM RECOMMENDATIONS TO OBTAIN A QUALITY PRODUCT. THE CONTRACTOR SHALL FOLLOW THE LOCAL CODES IF MORE RESTRICTIVE.

1.10 ALL SEEFLOW COMPONENTS TO BE SNUG-TIGHT ONLY. USING POWER TOOLS OR TIGHTEN HARDWARE FULLY-TENSIONED CAN PRODUCE CRACKING ON THE PLASTIC.

2 EXCAVATION

2.1 ANY SHORING OR TEMPORARY SHORING NOT SHOWN ON DRAWINGS WILL BE EXECUTED, IN A SAFE MANNER, BY THE GENERAL CONTRACTOR.

2.2 IT IS THE RESPONSIBILITY OF OTHERS TO VERIFY THE EXISTENCE OF ANY UNDERGROUND SERVICES ETC.

2.3 IF AVAILABLE, REFER TO SOIL REPORT FOR BACKFILL REQUIREMENTS. ALL BACKFILL (FOR SLAB ON GRADE, ETC.) MUST BE DONE IN ACCORDANCE WITH THE RECOMMENDATIONS OF A QUALIFIED PROFESSIONAL. USE ONLY FREE DRAINING, GRANULAR, MINERAL, INERT AND NON- REACTIVE FILL.

3 FOUNDATIONS

3.1 REFER TO SOIL REPORT FOR RECOMMENDATIONS.

3.2 ALL FOOTINGS SHALL REST ON A HOMOGENEOUS LAYER OF UNDISTURBED SOIL OR ENGINEERED BACKFILL WITH A MINIMUM ALLOWABLE BEARING CAPACITY OF 100KPA (2000 PSF) AND MAXIMUM DIFFERENTIAL SETTLEMENT OF 19 MM (0.75"). ALL ORGANIC MATERIAL SHALL BE REMOVED.

3.3 IT IS THE CONTRACTOR'S RESPONSIBILITY TO ENSURE THAT THE SOIL AT ALL FOOTING LOCATIONS BE VERIFIED BY A QUALIFIED SOILS EXPERT BEFORE POURING FOOTINGS TO ENSURE FOOTINGS REST ON APPROPRIATE STRATA.

3.4 WHEN APPLICABLE, FOLLOW GEOTECHNICAL EXPERT RECOMMENDATIONS FOR ALL EXTERIOR FOOTINGS TO ENSURE FROST PROTECTION.

4 CONCRETE

4.1 ALL CONCRETE MATERIALS, PROCEDURES, TOLERANCES & WORKMANSHIP SHALL CONFORM TO THE LATEST ISSUES OF ACI-318 AND ACI 317 OR ACNOR CAN3-A23.1 & A23.2, DEPENDING ON PROJECT LOCATION.

4.2 CONCRETE THAT HAS BEEN IN THE TRUCKS LONGER THAN 2 HOURS SHALL BE REJECTED. DO NOT ADD WATER TO THE CONCRETE IN THE TRUCKS OR ON THE SITE UNDER ANY CIRCUMSTANCES.

4.3 USE MAXIMUM 76mm (3") SLUMP, 19mm (3/4") AGGREGATE, UNLESS OTHERWISE-NOTED. USE 5-7% AIR ENTRAINMENT FOR CONCRETE EXPOSED TO WEATHER ONLY.

4.4 ALL GROUT SHALL BE NON-SHRINK TYPE WITH A MINIMUM 28 DAYS STRENGTH OF 35.0 MPA (5000 PSI). USE 25 MM (1") GROUT UNDER ALL STEEL COLUMN BASE PLATES.

4.5 CONCRETE STRENGTH @ 28 DAYS TO BE:

4.5.1 FOUNDATIONS (FOOTINGS): 25.0 MPA (3500 PSI), UNLESS OTHERWISE NOTED.

4.5.2 INTERIOR SLAB ON GRADE: 25.0 MPa (3500 PSI), UNLESS OTHERWISE NOTED.

4.5.3 EXTERIOR SLAB ON GRADE: 32.0 MPa (4500 PSI), UNLESS OTHERWISE NOTED.

4.6 MINIMAL RE-BAR COVER:

4.6.1 CONCRETE POURED ON-GRADE = 76mm (3") COVER

4.6.2 CONCRETE POURED INTO FORMWORK BUT EXPOSED TO SOIL AND WEATHER FOR REBAR 15m (#4) AND UNDER = 50mm (2") COVER

5 REINFORCING STEEL

5.1 DEPENDING ON PROJECT LOCATION, ALL REINFORCING STEEL SHALL CONFORM TO ASTM A615 (BARS 15m (#4) TO BE GRADE 60 WITH SUPPLEMENTARY REQUIREMENTS ON S1.

BARS SMALLER THAN 15m (#4), TO BE GRADE 40); OR TO ACNOR GRADE G30.12 [FY = 400MPA (60,000 PSI), UNLESS OTHERWISE NOTED].

5.2 USE CONCRETE, PLASTIC OR STEEL SUPPORT BARS, AS PER ACI (MANUAL OF STANDARD PRACTICE FOR DETAILING CONCRETE STRUCTURES). THE RE-BAR PLACER MUST REMAIN ON-SITE DURING POURS TO VERIFY CORRECT POSITIONING OF RE-BARS. SLANT UPPER REINFORCING STEEL IN LINE WITH THE SLOPE OF THE SLAB, IF APPLICABLE.

5.3 BARS SHALL BE SECURELY WIRED PER LATEST EDITION OF CRSI (RECOMMENDED PRACTICE FOR PLACING REINFORCING BARS).

5.4 ALL REINFORCING STEEL IS TO BE KEPT CLEAN AND FREE OF MUD, SNOW, ICE, AND ANY CONTAMINANTS.

5.5 VERTICAL AND CONTINUOUS REBAR SHALL BE LAPPED TO DEVELOP FULL TENSILE CAPACITY OF THE BAR. FOR 15M (#4) BARS MINIMUM LAP OF 610mm (24").

6 EXTERIOR / INTERIOR SLAB ON GRADE

6.1 FOLLOW THE GEOTECHNICAL EXPERT RECOMMENDATIONS FOR PREPARATION OF SOIL BEFORE POURING THE CONCRETE. ALL GRANULAR MATERIAL SHALL BE MOISTENED

IMMEDIATELY BEFORE POURING THE CONCRETE. WATER AS NEEDED. DO NOT USE A VAPOR BARRIER.

6.2 NO TRUCKS ARE PERMITTED ON THE CONSTRUCTION SITE (OF THE SLAB) AFTER THE FINAL COMPACTION, EITHER BEFORE OR DURING, THE POUR.

6.3 SLAB TO BE MINIMUM 6" THICK, REINFORCED WITH 10m (#3) @ 300mm (12") C/C REBAR PLACED IN BOTH DIRECTIONS AT MID-HEIGHT OF THE SLAB, UNLESS OTHERWISE NOTED ON PLANS.

6.4 REFER TO CONCRETE SECTION FOR MINIMUM COMPRESSIVE STRENGTH AND AIR-ENTRAINMENT REQUIREMENTS.

6.5 FINISHING WILL BE MEDIUM BROOM.

6.6 CONTROL JOINTS (SAW-CUTS) TO BE LOCATED IN EACH DIRECTION, AT REGULAR INTERVALS, WITH A MAXIMUM DISTANCE OF 3 METERS (10 FEET). SHALL BE MINIMUM 3 MM (1/8") WIDE AND SHALL PENETRATE THE SLAB TO A MINIMUM DEPTH OF 1/3 OF THE THICKNESS OF THE SLAB. CONTROL JOINTS SHOULD BE DONE AS SOON AS POSSIBLE WITHOUT DAMAGING THE CONCRETE, BUT NO LATER THAN 18 HOURS AFTER POURING.

6.7 WHEN POSSIBLE AND TO AVOID SHRINKAGE CRACKING, HUMIDITY SHALL BE MAINTAINED FOR 7 DAYS DURING THE CURING PERIOD OF THE SLAB. WATER AND USE POLYETHYLENE CLOTH OR BAG. THE CONCRETE MUST DRY UNIFORMLY.

7 CONCRETE WORK IN COLD OR HOT WEATHER (MINIMUM REQUIREMENTS)

7.1 COLD WEATHER REQUIREMENTS APPLY WHEN THE MEAN AIR IS LESS THAN 5 DEGREES CELSIUS (40 DEGREES FAHRENHEIT).

7.2 GENERAL REQUIREMENTS FOR COLD WEATHER CONCRETE WORK SHALL BE AS PER ACI 306R-88; OR AS PER THE NBC'S LATEST REQUIREMENTS INCLUDING THE LATEST ISSUE OF CSA STANDARD CAN3-A23.1.

7.3 ALL SNOW AND ICE SHALL BE REMOVED FROM FORMS AND REBAR WITH STEAM AND COMPRESSED AIR BEFORE POURING. DO NOT USE DE-ICING SALT (CALCIUM CHLORIDE) OR ANY OTHER SALTS UNDER ANY CIRCUMSTANCES.

7.4 CONCRETE SHALL HAVE A MINIMUM TEMPERATURE OF 20 DEGREES CELSIUS AND A MAXIMUM TEMPERATURE OF 25 DEGREES CELSIUS WHILE POURING. IT IS THE CONTRACTOR'S RESPONSIBILITY TO ENSURE THAT THESE REQUIREMENTS ARE SATISFIED. ANY CONCRETE THAT DOES NOT CONFORM MUST BE REJECTED.

7.5 THE SURFACE OF POURED CONCRETE SHALL BE PROTECTED BY MEANS OF SUITABLE COVERINGS AND INSULATION (TO BE DETERMINED BY TEMPERATURE) DURING THE CURING PROCESS.

7.6 GENERAL REQUIREMENTS FOR HOT WEATHER CONCRETE WORK SHALL BE AS PER ACI 305R-99; OR AS PER LOCAL CODE REQUIREMENTS.

8 PIPING

8.1 WDS CONFIGURATION ARE SCHEMATIC AND MAY BE MOVED OR ADJUSTED ON SITE BY VORTEX CERTIFIED INSTALLER TO ADJUST FOR SITE CONDITIONS.

8.2 ANY REQUIRED BACKFLOW PREVENTER, PRESSURE REGULATOR & WATER METER ON THE CITY WATER MAIN SHALL BE PROVIDED BY OTHER.

8.3 ALL PIPE LINES TO FEATURES TO HAVE A 1% MINIMUM RECOMMENDED SLOPE FOR PROPER WINTERIZATION.

8.4 ALL LINE SIZING (FEATURE CONNECTION TABLE) ASSUMES A MAXIMUM DISTANCE OF 30 FEET BETWEEN THE WATER DISTRIBUTION MANIFOLD AND THE FURTHEST PLAY PRODUCT. DISTANCES ABOVE 30 FEET MAY REQUIRE AN INCREASE IN LINE SIZING. PLEASE CONTACT VORTEX.

8.5 FINAL LOCATION OF DRAIN AND LINE ROUTING ARE TO BE DETERMINED BY OTHERS.

8.6 PRESSURE LINES ARE RECOMMENDED TO BE SCHEDULE K-COPPER, AND NON-PRESSURE LINES TO BE SCHEDULE 40, UNLESS OTHERWISE REQUESTED BY LOCAL CODE.

8.7 DRAINAGE LINES ARE RECOMMENDED TO BE SDR 35, UNLESS OTHERWISE REQUESTED BY LOCAL CODE.

8.8 PIPING SHOULD BE INSPECTED AFTER TRANSPORTATION FOR CUTS, SCRATCHES, GOUGES OR SPLITS; DAMAGED SECTIONS MUST BE DISCARDED OR CUT OUT.

8.9 PIPE SHALL BE INSTALLED BELOW THE FROST LEVEL NOT LESS THAN 12" (ASTM F-645) UNLESS OTHERWISE REQUESTED BY LOCAL CODE.

8.10 PIPE INSTALLATION MINIMUM COVER SHOULD BE EVALUATED ACCORDING TO ASTM D-2774, UNLESS OTHERWISE REQUESTED BY LOCAL CODE.

8.11 SPECIAL CONSIDERATIONS SHOULD BE TAKEN FOR THERMAL CONDITIONS, EXPANSION AND CONTRACTIONS DUE TO TEMPERATURE SHOULD BE EVALUATED BEFORE THE INSTALLATION BY THE CONTRACTOR.

8.12 MINIMUM 50 PSI REQUIRED AT THE INLET OF THE BACKFLOW PREVENTER AND PRESSURE REGULATING DEVICE.

8.13 MAXIMUM FLOW CAPACITY OF HYDRAULIC ACTIVATOR IS 45 GPM.

8.14 TOTAL FLOW OF THE FEATURES IS 48.4 GPM.

8.15 THERE IS NO SEQUENCING, FEATURES ARE ON WHEN ACTIVATOR IS PRESSED.

9 ELECTRICAL

9.1 EQUIPMENT BONDING; FEATURES SHALL BE CONNECTED TO AN EQUIPOTENTIAL BONDING GRID WITH A SOLID RIGID COPPER CONDUCTOR, THE MINIMUM SIZE OF BONDING CONDUCTORS NOT BE SMALLER THAN #6 AMERICAN WIRE GAUGE (AWG) ($16mm^2$) COPPER. BOND TO ALL METALLIC PARTS LOCATED IN THE SPLASHPAD/POOL AND TO THE REBAR, TO RUN CONTINUOUS TO THE WATER PUMP AND ELECTRICAL SUPPLY PANELS.

9.2 GRID STRUCTURE; THE EQUIPOTENTIAL BONDING GRID SHALL COVER THE CONTOUR OF THE WATER BODY AREA AND ANY DECK EXTENDING 3FT (1m). HORIZONTALLY FROM THE INSIDE WALLS OF THE SPLASHPAD/WATER BODY. THE EQUIPOTENTIAL BONDING GRID SHALL BE ARRANGED IN A 12 IN (300mm). BY 12 IN (300mm). NETWORK OF CONDUCTORS IN A UNIFORMLY SPACED PERPENDICULAR GRID PATTERN WITH TOLERANCE OF 4 IN (100mm). A J-JUNCTION BOND CLAMP (DIRECT BURIAL CERTIFIED) CLAMPED TO A REBAR WITH WIRE LOOPED THROUGH CONNECTOR AND CLAMPED TO STEEL AND TO THE SPLASHPAD/POOL PUMP WATER

9.3 ALL ELECTRICAL EQUIPMENT SHALL BE GROUNDED; THE FOLLOWING EQUIPMENT SHALL BE GROUNDED. ALL ELECTRICAL EQUIPMENT LOCATED WITHIN 5FT (1.5 m) OF THE INSIDE WALL OF THE SPECIFIED BODY OF WATER." THIS EQUIPMENT ALSO INCLUDES (BUT NOT LIMITED TO): FEATURES, ELEVATIONS, DRAIN, REBAR, WATER INLET, SKIMMER, LADDER, SLIDES, DIVING STRUCTURE, UNDERWATER LIGHTING, JUNCTION BOXES, AND WATER CIRCULATING/HEATING EQUIPMENT.

ALL BONDING AND GROUNDING MUST COMPLY WITH NEC, CEC, AND LOCAL CODES.

9.4 ALTERNATE MEANS; WHERE STRUCTURAL REINFORCING STEEL IS NOT AVAILABLE OR IS ENCAPSULATED IN A NONCONDUCTIVE COMPOUND, A COPPER CONDUCTOR(S) SHALL BE UTILIZED WHERE THE FOLLOWING REQUIREMENTS ARE MET: (1) AT LEAST ONE MINIMUM 6 AWG BARE SOLID COPPER CONDUCTOR SHALL BE PROVIDED. (2) THE CONDUCTORS SHALL FOLLOW THE CONTOUR OF THE PERIMETER SURFACE. (3) ONLY LISTED SPLICES SHALL BE PERMITTED. (4) THE REQUIRED CONDUCTOR SHALL BE 18 IN TO 24 IN (450mm TO 600mm) FROM THE INSIDE WALLS OF THE POOL. (5) THE REQUIRED CONDUCTOR SHALL BE SECURED WITHIN OR UNDER THE PERIMETER SURFACE (4 IN TO 6 IN (100mm TO 150mm). BELOW THE SUBGRADE.

9.5 SPLASHPAD/POOL WATER; WHERE NONE OF THE BONDED PARTS IS IN DIRECT CONNECTION WITH THE POOL WATER, THE POOL WATER SHALL BE IN DIRECT CONTACT WITH AN APPROVED CORROSION-RESISTANT CONDUCTIVE SURFACE THAT EXPOSED NOT LESS THAN 9 IN.2 ($5800mm^2$) OF SURFACE AREA TO THE POOL WATER AT ALL TIMES. THE CONDUCTIVE SURFACE SHALL BE LOCATED WHERE IT IS NOT EXPOSED TO PHYSICAL DAMAGE OR DISLODGEMENT DURING USUAL POOL ACTIVITIES, AND IT SHALL BE BONDED IN ACCORDANCE WITH NEC, CEC, AND LOCAL CODES.

Drawing #	Drawing Name	Rev #
P-001	Plumbing Layout	00
E-003	Bonding Layout	00

VORTEX USA Inc.
3500 South Dupont Highway, Suite EP-101
Dover, Delaware
United States 19901
Phone: +1 (877) 586-7839

COPYRIGHT VORTEX USA Inc-THIS DOCUMENT AND THE IDEAS, RENDERINGS AND OTHER CONTENTS CONTAINED THEREIN ARE THE SOLE PROPETY OF VORTEX USA Inc AND MAY NOT BE DISSEMINATED, COPIED, REPRODUCED OR OTHERWISE USED WITHOUT PRIOR WRITTEN CONSENT OF VORTEX USA Inc.

Hurld Park Splashpad

Abbreviations	
A	Architectural
C	Civil Work
P	Plumbing Layout
PD	Plumbing Details
E	Electrical Layout
ED	Electrical Details
FT	Feature Drawings

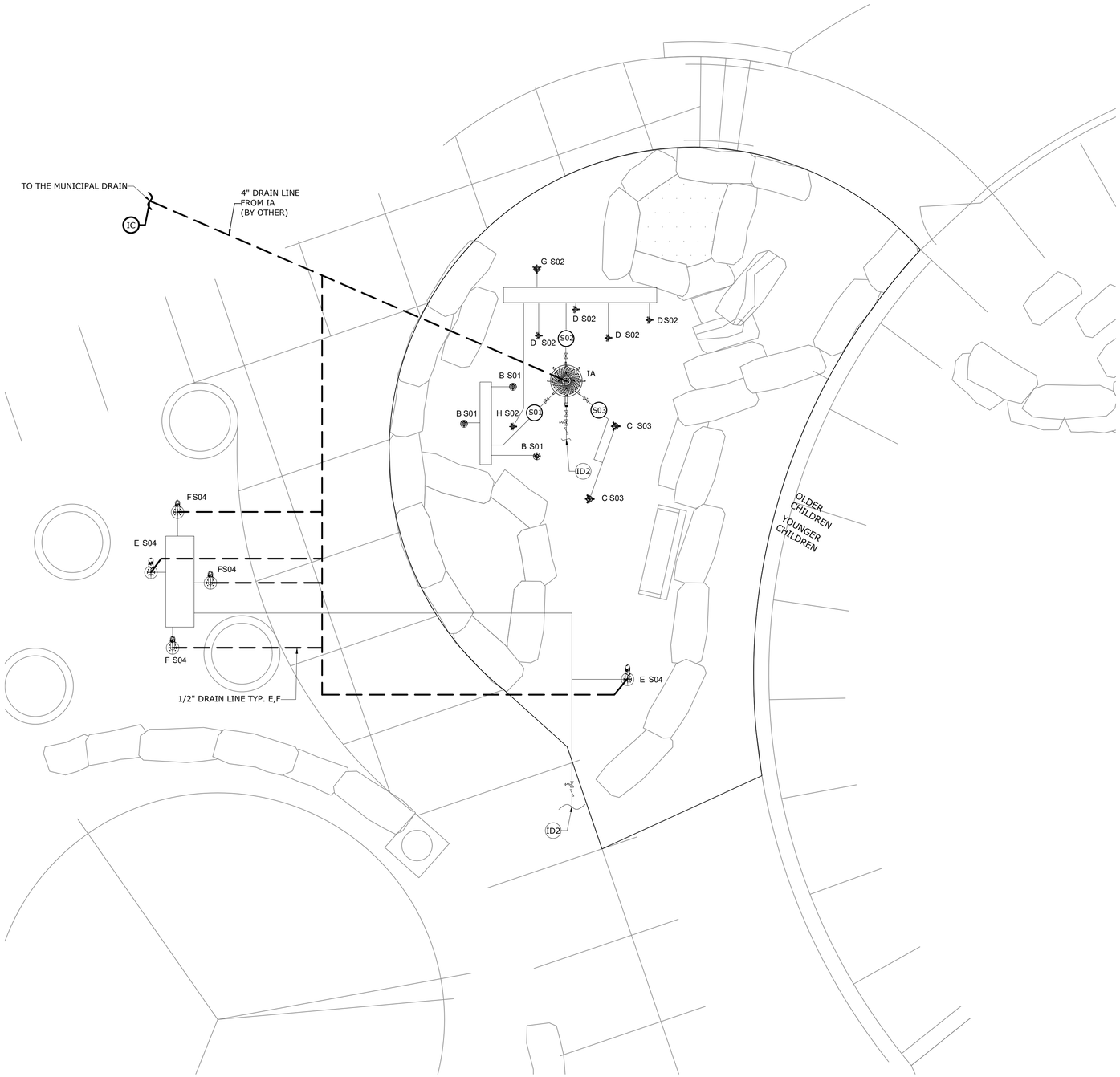

1 / P-001 PLUMBING LAYOUT

WATER LINE
DRAIN LINE

Feature Connection Table						
Manifold Output Ref.	Gate Valve	Feature Ref.	Feature	Qty	Line Size	Gpm
S01	1"	B	Water Jelly N°1 VOR 7010	3	1 1/2"	18.0
S02	1"	D	Jet Stream N°1 VOR 7512	4	1 1/2"	10
		G	Sparkle N°1 VOR 0324	1		3
		H	Geyser N°1 VOR 0301	1		7.5
S03	1"	C	Magic Mist N°2 VOR 8099	2	1"	9

Manifold Output Ref.	Feature Ref.	Feature	Qty	Line Size	Gpm
S04	E	Glomist VOR 7247	2	1"	0.8
	F	Glomist Nano VOR 7248	3		0.6

Product Legend		
Product Ref.	Product	Qty
IA	Push Button Activator VOR 0605	1
IC	4" Drain Line To Municipal Drain (By Other)	1
ID1	1 1/2" City Water Line (By Other)	1
ID2	1" City Water Line (By Other)	1
	1 1/2" Pressure Regulator (by Other)	1
	1 1/2" Backflow Preventer (by Other)	1
	1" Pressure Regulator (by Other)	1
	1" Backflow Preventer (by Other)	1
	1 1/2" Ball Valve located Inside Hydraulic Activator (by Vortex)	1
	1" Gate Valve located inside the Hydraulic Activator (by Vortex)	3

VORTEX

VORTEX USA Inc.
3500 South Dupont Highway, Suite EP-101
Dover, Delaware
United States 19901
Phone: +1 (877) 586-7839

COPYRIGHT VORTEX USA Inc-THIS DOCUMENT AND THE IDEAS, RENDERINGS AND OTHER CONTENTS CONTAINED THEREIN ARE THE SOLE PROPETY OF VORTEX USA Inc AND MAY NOT BE DISSEMINATED, COPIED, REPRODUCED OR OTHERWISE USED WITHOUT PRIOR WRITTEN CONSENT OF VORTEX USA Inc.

Hurld Park Splashpad

Project Location
Woburn, MA

Project Number
42368

Version
VC

Date	Revision Description	No.	By
05/Nov/2025	Issued for Approval	00	SN

Drawing Title
Plumbing Layout

Drawn by	Verified by
SN	MAB
Scale	**Date**
1/4"=1'-0"	05/Nov/2025

Page #
P-001

Ref	Product	Qty
IA	Push Button Activator VOR 0605	1
B	Water Jelly N°1 VOR 7010	3
C	Magic Mist N°2 VOR 8099	2
D	Jet Stream N°1 VOR 7512	4
E	Glomist VOR 7247	2
F	Glomist Nano VOR 7248	3
G	Sparkle N°1 VOR 0324	1
H	Geyser N°1 VOR 0301	1

1
E-003

BONDING LAYOUT

1. REFER TO SPECS ON COVER PAGE
2. COORDINATE THIS DRAWING WITH ARCHITECTURAL, CIVIL, PLUMBING & ELECTRICAL.

BONDING WIRE - - - - - - - - - - - - - -

VORTEX

VORTEX USA Inc.
3500 South Dupont Highway, Suite EP-101
Dover, Delaware
United States 19901
Phone: +1 (877) 586-7839

COPYRIGHT VORTEX USA Inc-THIS DOCUMENT AND THE IDEAS, RENDERINGS AND OTHER CONTENTS CONTAINED THEREIN ARE THE SOLE PROPETY OF VORTEX USA Inc AND MAY NOT BE DISSEMINATED, COPIED, REPRODUCED OR OTHERWISE USED WITHOUT PRIOR WRITTEN CONSENT OF VORTEX USA Inc.

Hurld Park Splashpad

Project Location
Woburn, MA

Project Number
42368

Version
VC

Date	Revision Description	No.	By
05/Nov/2025	Issued for Approval	00	SN

Drawing Title
Bonding Layout

Drawn by	Verified by
SN	MAB
Scale	Date
1/2"=1'-0"	05/Nov/2025

Page #
E-003

SECTION 31 13 19 – INVASIVE PLANT REMOVAL (REVISED)

PART 1 GENERAL

1.1 SUMMARY

A. Section includes: The work associated with invasive species removal by means of mechanical and chemical control. Invasive and nuisance species work on site includes Japanese Knotweed, Asiatic Bittersweet, and any other understory invasive species (shrub, vine, forb, or grass), and trees under 2" caliper that are identified on the Massachusetts Prohibited Plant List, and are within the Limit of Work depicted on the Drawings, regardless of if it is identified on the drawings or not.

B. Any infested soil and/or plant material including plant leaves, stems, and roots within the Limit of Work is to be reused in place or removed and disposed of off-site. Under no circumstances is soil infested with invasive plant biomass, stems, and roots to be re-located elsewhere on the project site. Any removed infested soils will require transportation to an appropriate disposal facility.

C. Any soil infested with Japanese knotweed, including plant leaves, stems, and roots within the Limit of Work, is to be removed and disposed of off-site. Under no circumstances is soil infested with Japanese knotweed to be reused on site and will require transportation to an appropriate disposal facility.

D. Related Sections:
   1. Section 31 20 00 – Earth Moving
   2. Section 31 10 00 – Site Clearing
   3. Section 31 25 00 – Erosion and Sediment Control
   4. Section 32 91 19 – Landscape Grading
   5. Section 32 92 19 – Seeding
   6. Section 32 93 00 – Plants

E. Review and follow all items within the Woburn Conservation Commission Order of Conditions DEP# 348-867.

1.2 COORDINATION

A. Meeting: A meeting is to be held at the site prior to commencement of any site work to discuss invasive species control activities. The earthwork contractor, the invasive management specialist, the landscape contractor, and the landscape architect or environmental scientist must be present at this meeting.

B. Approach: The approach to invasive management is to be tied into the construction sequence, with three treatment occurrences and site monitoring. Times of treatment are given to align with site earth work and planting. Methods used for treatment are at the discretion of the contractor but must be approved. Coordinate with the Owner and Landscape Architect to confirm schedule and approaches prior to commencing work under this Section.

C. Approvals: The Work Plan and Schedule must be approved by the Woburn Conservation Commission (Commission) prior to any work beginning.

1.3 SUBMITTALS

A. Work Plan & Schedule: Schedule and management techniques to be used to treat invasive species within the limit of work during construction. Include dates, management techniques, and plan for soil stock piling / transport. Plan must be approved by Landscape Architect or Environmental Scientist before beginning. Plan must be approved by the Conservation Commission as outlined in the Order of Conditions.

B. Herbicide Product Data
   1. Provide the following information:
      a. Material properties – all herbicides must be for aquatic use
      b. Material Safety Data Sheet (MSDS)
   2. Supplier: Name, address, and phone number.
   3. Certification credentials of individual licensed to apply and/or oversee herbicide applications.

C. Manufacturer's Certificate: Certify products meet or exceed the specified requirements.

D. Disposal Facility: Name and address of the facility in which the weed infested soils are to be disposed, only if approved and necessary.

E. Contactor to provide written qualification data for firm and person(s) to be responsible for work to demonstrate their capabilities and experience as outlined in Qualification for invasives removal.

F. Contractor to provide current Massachusetts herbicide applicator certificate of person(s) to perform work where herbicides are to be used.

1.4 CLOSEOUT SUBMITTALS

A. Management Reports: Submit reports with images, descriptions and dates of work performed in compliance with the previously approved Work Plan and Schedule from Section 1.3.A

B. Maintenance: Submit recommended procedures for routine year-round management of invasives previously present on site to owner.
   1. Include strategies for management for both manual & chemical treatment.
   2. Include time of year and schedule for maintenance activities.

1.5 QUALIFICATIONS

A. The selected contractor must have at least one staff member on-site who is trained and certified in invasive plant identification. The contractor may, alternatively, provide a sub-contractor with the required expertise.

B. The selected contractor must have at least one staff member on-site who is trained and certified by the Commonwealth of Massachusetts in herbicide application. The contractor may, alternatively, provide a sub-contractor with the required expertise.

C. The contractor completing the work must have a certificate in invasive management or equivalent.

D. The selected contractor is to have a minimum of five years of documented experience with invasive management including application and use of herbicides.

1.6 DELIVERY, STORAGE AND HANDLING

A. Deliver, handle, and store materials in accordance with supplier's instructions.

B. Do not order or deliver materials until required certificates, product information, supplier information, and facility information has been reviewed and approved by the landscape architect.

PART 2 PRODUCTS

2.1 HERBICIDES FOR CHEMICAL CONTROL

A. All herbicides and chemicals must be for aquatic use.

B. Utilize herbicides for individual species as required.

C. Outline herbicides proposed and percentages / mixtures in Work Plan and Schedule.

PART 3 EXECUTION

3.1 TREATMENT AREA

A. Invasive and nuisance species work on site includes Japanese Knotweed, Asiatic bittersweet, and any understory invasive species (shrub, vine, forb, or grass), and trees under 2” caliper that are identified on the Massachusetts Prohibited Plant List and are within the Limit of Work depicted on the Drawings, regardless of if species is identified on the drawings.

3.2 EXAMINATION

A. Inspect all areas within the Limit of Work. Identify all invasives present and flag large stands of invasive plants.

3.3 PREPARATION

A. A combination invasive species management approach, including mechanical (cutting) and chemical (herbicide) treatment, can be utilized. Verify that soil management and plant treatment techniques are coordinated with site work.

B. Flag all areas where soil should not be reused due to the presence of invasive plants, and specifically where soils are infested with Japanese knotweed. Maintain flags throughout duration of site work.

3.4 INFESTED SOIL STOCKPILE

A. Any infested soil and/or plant material including plant leaves, stems and roots, within the Limit of Work may be re-used in-place or else must be removed and disposed of off-site. Under no circumstances is soil infested with invasive plant biomass, stems, and roots to be re-used in any adjacent areas on the project site. Transportation to an appropriate disposal facility is required for any infested soils removed from the site.

B. Any soil infested with Japanese knotweed, including plant leaves, stems, and roots within the Limit of Work is to be removed and disposed of off-site. Under no circumstances is soil infested with Japanese knotweed to be reused on site and will these infested soils require transportation to an appropriate disposal facility.

C. Establish infested soil stockpile area during erosion controls and site clearing. Under no circumstances is removed biomass of invasive species to be stockpiled on site in undesignated areas. Coordinate with the Landscape Architect and/or Engineer if additional stockpiles are required.

D. Transport soil and invasive material to approved disposal site.

E. If there is a delay in transport or soil, surround the infested soil stockpile area with silt fence and straw bales as required to prevent overland flow from washing into or out of the area. Cover the infested soil stockpile area with black plastic or a tarp to minimize sun exposure to the invasive vegetation biomass.

3.5 INVASIVES MANAGEMENT SEQUENCE

A. FIRST TREATMENT

1. The first treatment is to occur at least two weeks prior to earth work activities in the areas where invasive species have been identified. If applicable based on species and time of year, herbicide is to be applied with a glove or by injection.
2. Treatment Acceptance:
    a. After treatment submit in writing the treatment performed with dates and imags to the Landscape Architect.
    b. The first treatment will be approved when all invasive vegetation has started to die or has been removed from the site. Additional applications or removal may be required. All invasive plant material must be removed from site prior to earth work.

B. SECOND TREATMENT

1. The second treatment must occur after final grades have been set, and before seeding and planting perennials and shrubs. Final grades are to be given at least three weeks to monitor if any invasive plants start to sprout before treatment. Contact the Landscape Architect to review the site prior to treatment. All regrowth from invasive species is to be removed mechanically if small in size or treated with herbicide. Any seeded areas damaged during treatment are to be replaced and amended.
2. Treatment Acceptance:
    a. After treatment, submit in writing the treatment performed with dates and images to the Landscape Architect.
    b. The treatment will be approved when all invasive plants within the treatment zone show signs of mortality, and no regrowth is visible one month after application. Follow-up applications may be required at no additional cost to the Owner if the initial application(s) are found to be only partially effective.

C. REVEGETATION

1. Plant and/or seed all areas as indicated on the Drawings ONLY following confirmation of no regrowth of invasive plants. Individual shoots that sprout amongst replanted vegetation shall be controlled by hand pulling, injection and/or “weed glove” methods only.

D. THIRD TREATMENT

1. The third treatment to occur one month after plants have been planted and site is starting to establish. Visit the site and review if invasive species are starting to emerge. If any are present, remove mechanically or spot treat as outlined in approved work plan. Any plants or seeded areas damaged during treatment are to be replaced. Individual shoots that sprout amongst replanted vegetation shall be controlled by hand pulling, injection and/or “weed glove” methods only.
2. Final Acceptance:
    a. After treatment, submit in writing the treatment performed with dates and images to the Landscape Architect.
    b. Contractor, Landscape Architect and Owner to convene on site one month after third treatment to review.
    c. The treatment will be approved and completed when all invasive plants within the treatment zone one month after application show signs of mortality and no regrowth is visible. Follow-up applications may be required at no additional cost to the Owner if the initial application(s) are found to be only partially effective.

E. MONITORING

1. Monitor all areas within the Limit of Work throughout construction for the appearance of invasive species. If any are present within the limit of work remove as appropriate based on species.

END OF SECTION

PROPERTY OF EARTHSCAPE PLAY INC. - DO NOT COPY. DO NOT DISTRIBUTE.

INSTALLATION INSTRUCTIONS

EARTHSCAPE COLLECTIONS

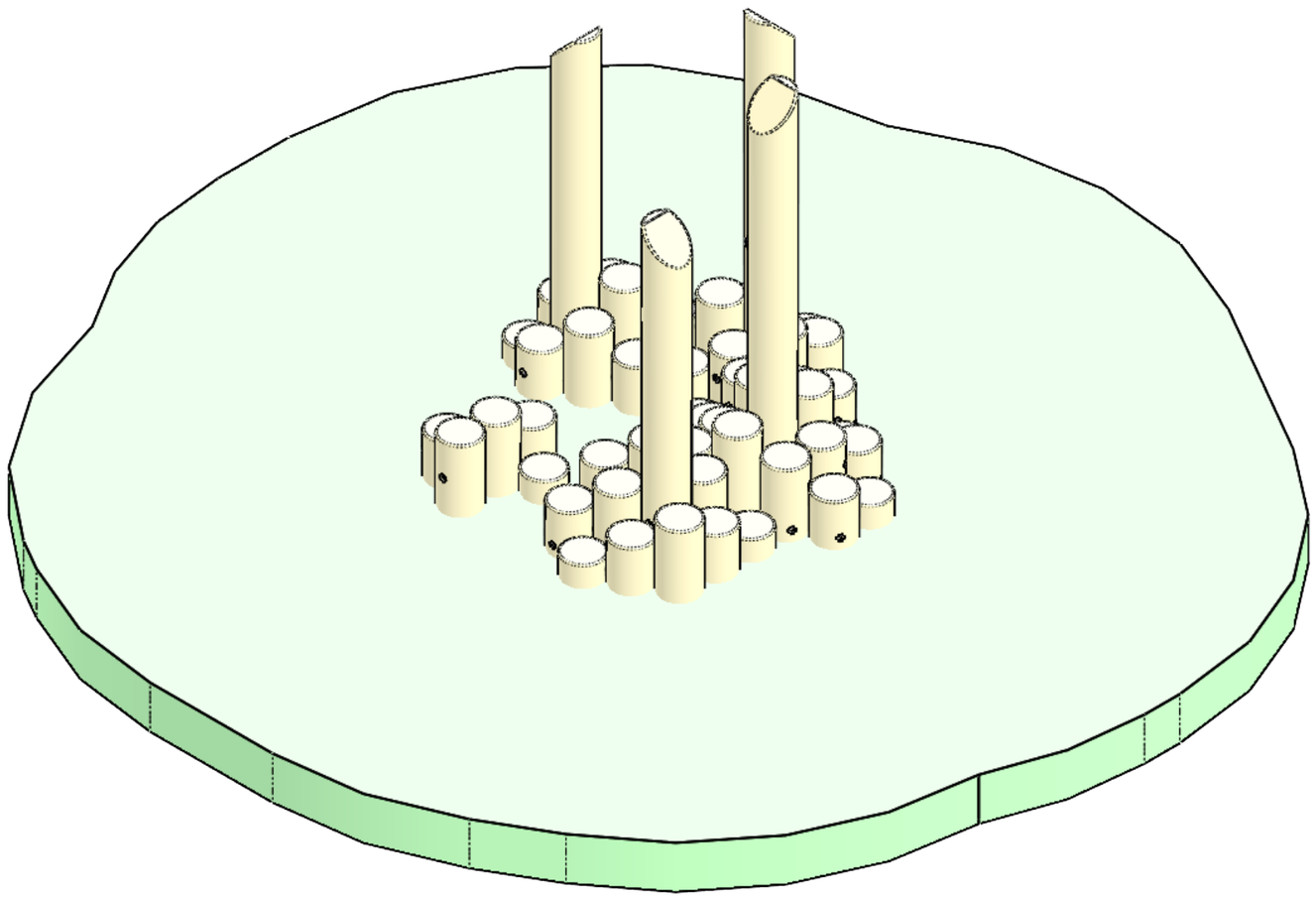

STEPPER CLUSTER M4

THESE INSTRUCTIONS APPLY TO THE FOLLOWING VERSIONS OF THIS PRODUCT:

F00496 - STEPPER CLUSTER M4
(CONCRETE FOUNDATION INSTALL)

NOTE: COLOURS SHOWN ARE REPRESENTATIONAL AND MAY NOT BE THE SAME AS THOSE OF THE SUPPLIED PRODUCT

DATE DOCUMENT RELEASED 2024-09-09
DOCUMENT NUMBER: 1063639-R2

PROPERTY OF EARTHSCAPE PLAY INC. - DO NOT COPY. DO NOT DISTRIBUTE.

SPECIFICATIONS

INTENDED USER AGE GROUP: 18m to 5y
MAXIMUM HEIGHT OF STRUCTURE: 2.74m
MAXIMUM DESIGNATED FALL HEIGHT: 0.60 m
AREA OF SURFACING: 34.9 m²
WEIGHT: 2222 kg

RECOMMENDED INSTALLATION BUFFER

Play equipment requires a variety of offsets to other elements in a playground. The plan view on this page shows the minimum recommended area needed for installing this piece of play equipment by itself. Combining this play equipment with other pieces should be reviewed by a person with a Certified Playground Safety Inspector training.
The offset shown here includes a buffer beyond the CSA requirements to account for fabrication and material variation.

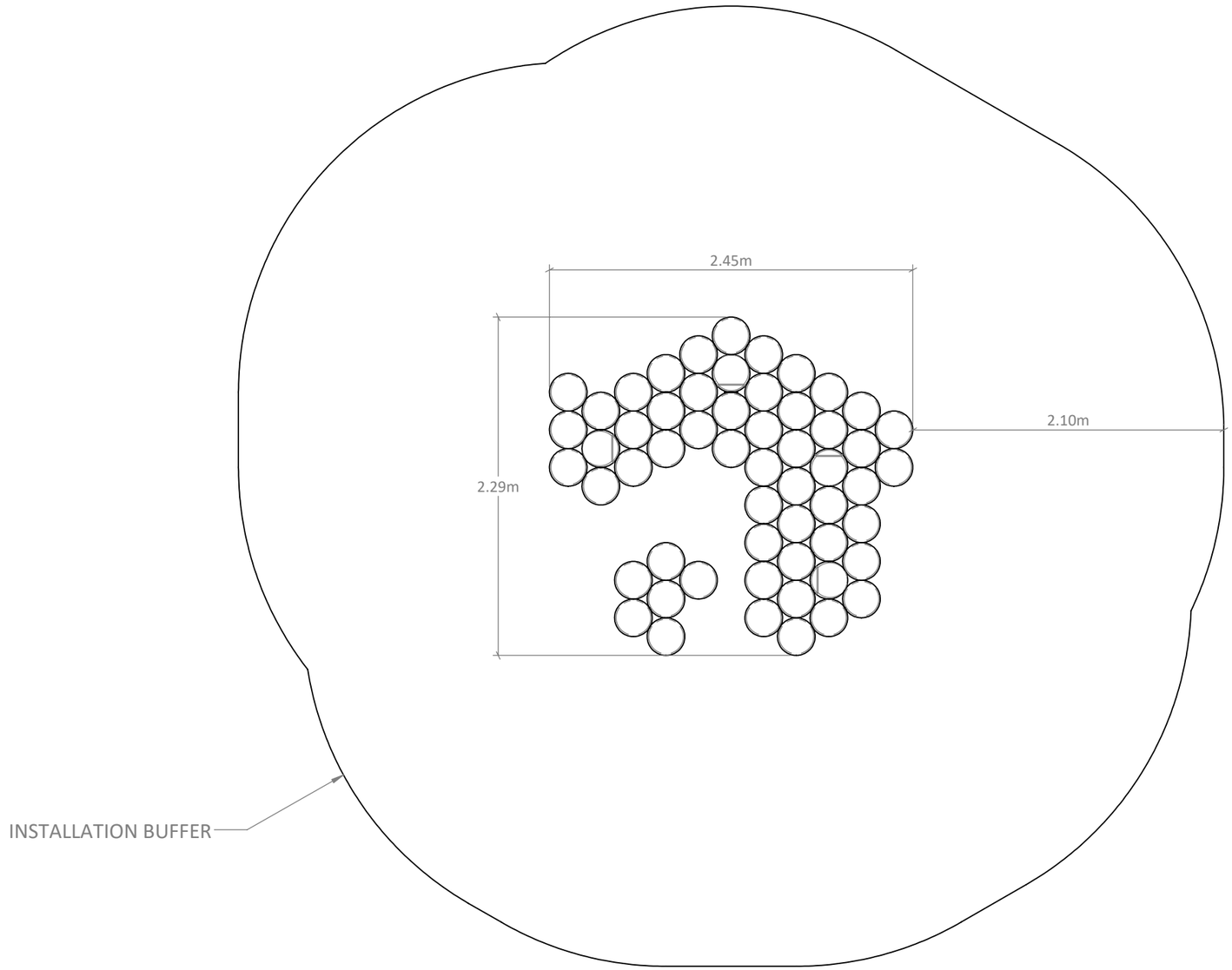

PROPERTY OF EARTHSCAPE PLAY INC. - DO NOT COPY. DO NOT DISTRIBUTE.

ASTM SPECIFICATIONS (FOR INSTALLATIONS AT U.S. SITES ONLY)

STEPPER CLUSTER M4

SPECIFICATIONS

INTENDED USER AGE GROUP: 2 to 5y
MAXIMUM HEIGHT OF STRUCTURE: 9'-0"
MAXIMUM DESIGNATED FALL HEIGHT: 2'-0"
AREA OF SURFACING: 376 ft²
WEIGHT: 4900 lb

RECOMMENDED INSTALLATION BUFFER

Play equipment requires a variety of offsets to other elements in a playground. The plan view on this page shows the minimum recommended area needed for installing this piece of play equipment by itself. Combining this play equipment with other pieces should be reviewed by a person with a Certified Playground Safety Inspector training.
The offset shown here includes a buffer beyond the ASTM requirements to account for fabrication and material variation.

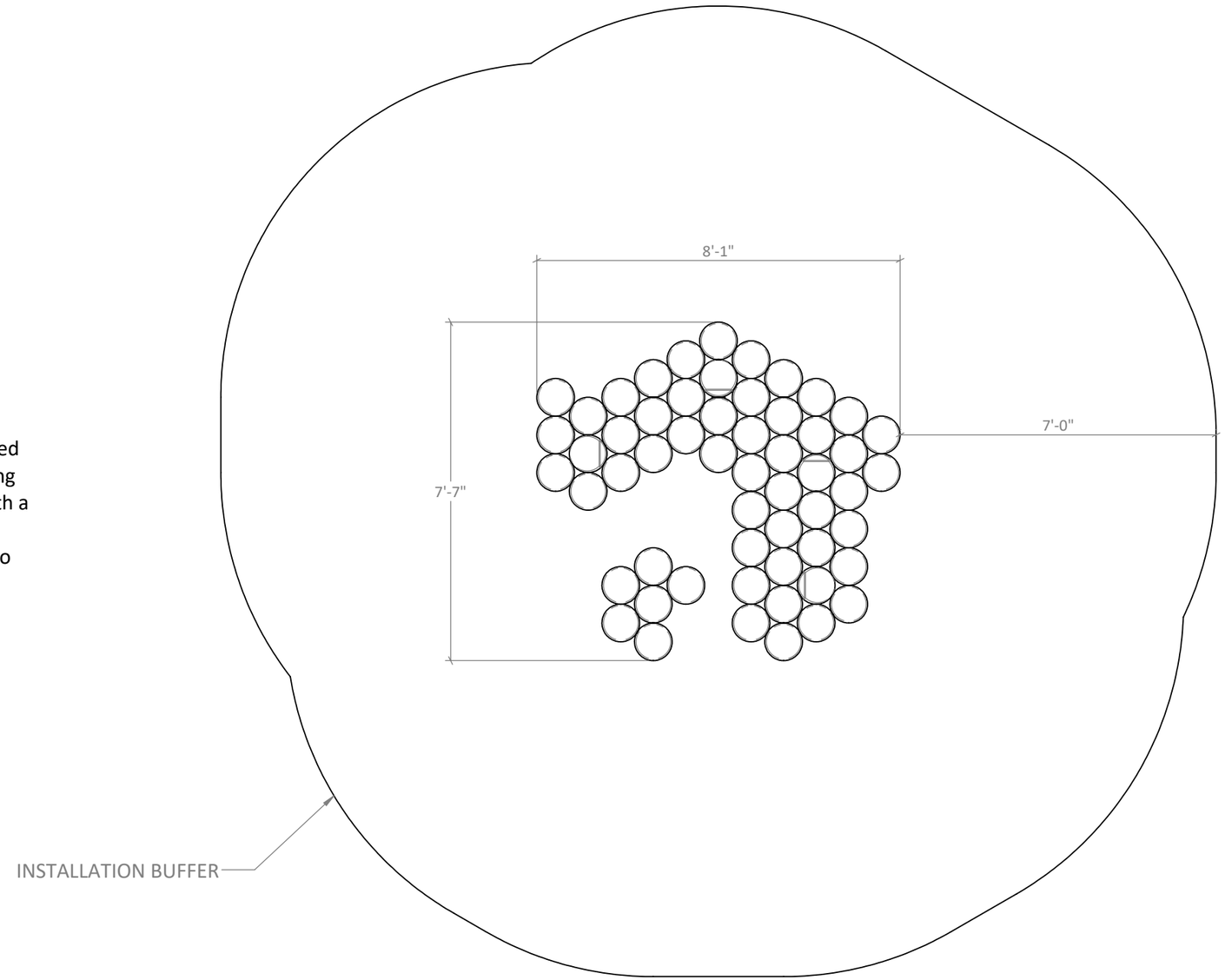

PROPERTY OF EARTHSCAPE PLAY INC. - DO NOT COPY. DO NOT DISTRIBUTE.

PLEASE READ ALL INSTRUCTIONS

Before starting to install this equipment be sure to read through and understand these instructions.
If you have any questions, contact your local dealer for assistance before proceeding.

MEASUREMENTS AND STANDARDS

Measurements have been provided in both metres and [feet-inches]. Ensure to follow standards noted for the location in which this play equipment is being installed. Those marked CSA are to be used in Canada and those marked ASTM to be used in the United States.

LIST OF ABBREVIATIONS

AYC = Alaskan Yellow Cedar
WRC = Western Red Cedar
DPS = Designated Play Surface
SS = Stainless Steel
HDG = Hot Dipped Galvanized
WWM = Welded Wire Mesh
TYP = Typical
C/W = Complete With
UNO = Unless Noted Otherwise
EWF = Engineered Wood Fiber
PIP = Poured-In-Place Rubber Surfacing
PT = Pressure Treated

TOOLS SUPPLIED WITH THIS PRODUCT

No Tools Supplied.

TOOLS THE INSTALLER NEEDS TO SUPPLY

High torque drill
Hammer drill
1/2" impact driver
Set of wood drill bits - up to 1/2"
Set of impact sockets - up to 1"
1/2" ratcheting socket wrench
T25 drive bit
T40 drive bit
Concrete drill bit, 1/2" x 8"
Angle grinder (with course 24 grit sanding disks and metal cut off disks)
Transit or Laser Level
Carpenter's Square
Rigging and lifting straps

EQUIPMENT THE INSTALLER NEEDS TO SUPPLY

Machine to lift and position heaviest element.
Stepper Cluster M4 - Trunk I +/-1030 kg [2275 lbs]

INSTALLER CREW AND TIME REQUIRED

Number of people needed: 2
Typical total person-hours to install: 16 + concrete cure time
Time breakdown:

- 4 hours x 2 people for excavation and pouring concrete
- Time for concrete cure
- 2 hours x 2 people for onsite fabrication and play equipment installation

MATERIALS THE INSTALLER NEEDS TO SUPPLY

Installer to supply materials for preparation, pour and cure of concrete. See Sheets 9 and 10.

WARNINGS

These instructions do not provide specific guidance on the use of tools or the lifting and moving heavy objects. It is assumed that competent people are installing this product who are familiar with using the tools and equipment required and are knowledgeable and skilled at lifting and positioning heavy objects.

PROPERTY OF EARTHSCAPE PLAY INC. - DO NOT COPY. DO NOT DISTRIBUTE.

MAKE SURE YOU HAVE ALL THE PARTS

Examine the equipment and ensure you have all the required parts listed in the table below.

See "As Shipped" Sheet to understand orientation of product as delivered to site.

ITEM NO.	PARTNO	DESCRIPTION	QTY.
1		STEPPER CLUSTER M4 - TRUNK I	1
2		STEPPER CLUSTER M4 - TRUNK II	1
3		STEPPER CLUSTER M4 - TRUNK III	1
4	B00060	6 X 6 DOCK BRACKET V2	10
5	H16685	WOOD SCREW, WASHER HEAD, M8X100, SS	40
6	H60020	TITEN HD 1/2" X 5" CONCRETE SCREW	20

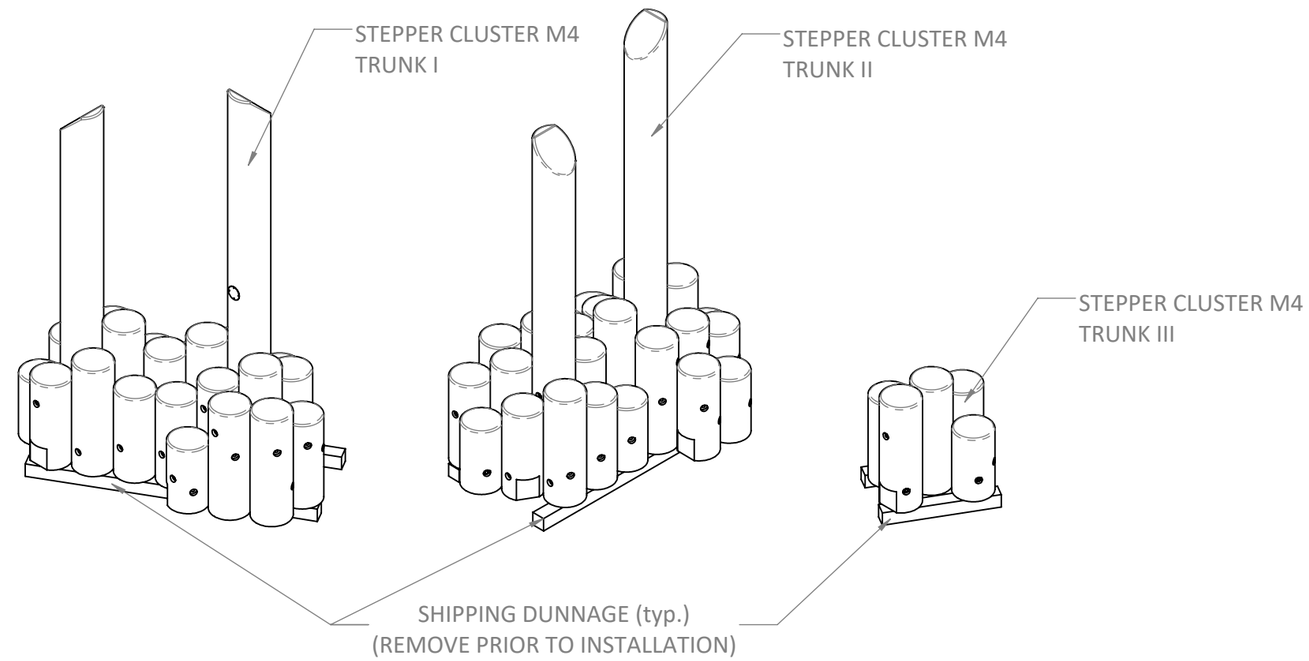

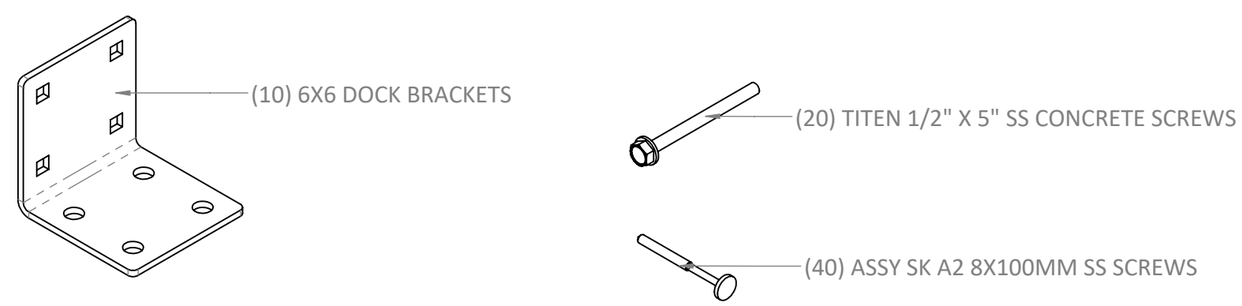

PROPERTY OF EARTHSCAPE PLAY INC. - DO NOT COPY. DO NOT DISTRIBUTE.

AS SHIPPED

STEPPER CLUSTER M4

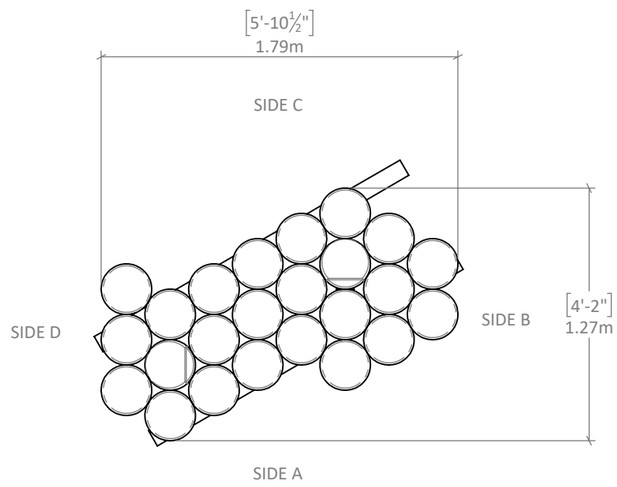

PLAN VIEW

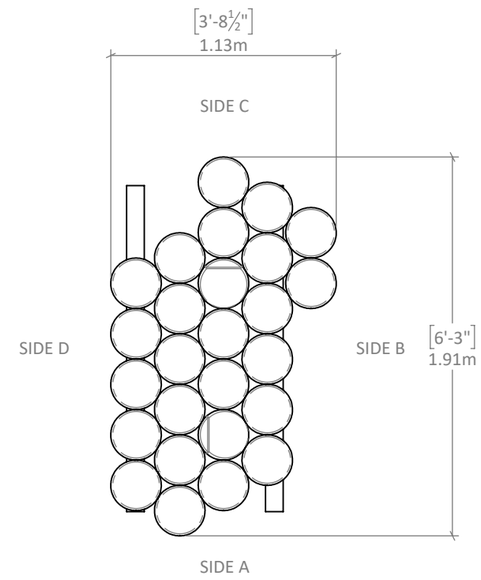

PLAN VIEW

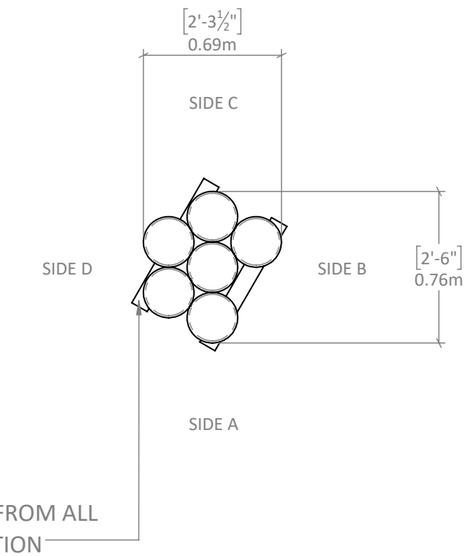

DUNNAGE TO BE REMOVED FROM ALL TRUNKS PRIOR TO INSTALLATION

PLAN VIEW

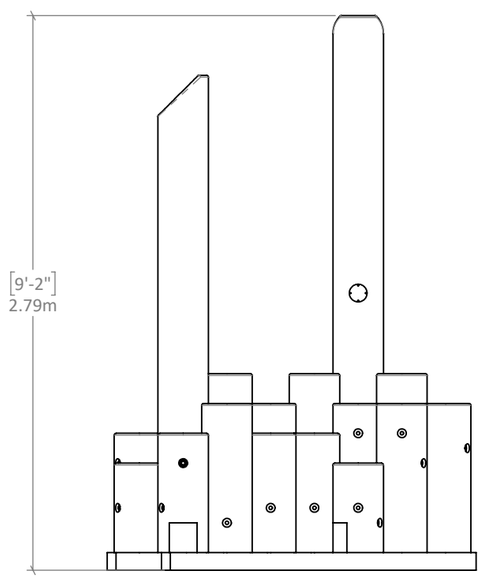

SIDE A

TRUNK I

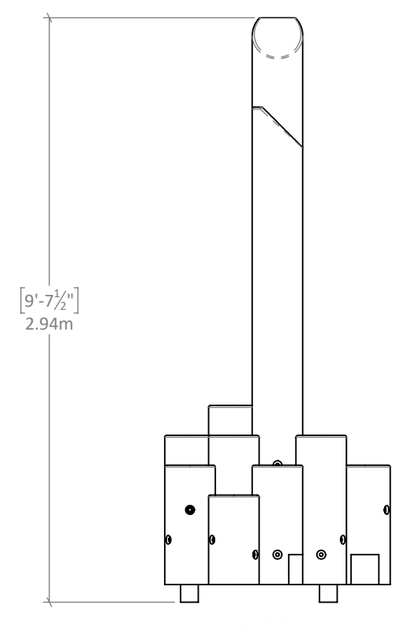

SIDE A

TRUNK II

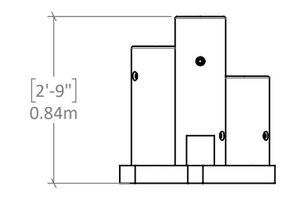

SIDE A

TRUNK III

PROPERTY OF EARTHSCAPE PLAY INC. - DO NOT COPY. DO NOT DISTRIBUTE.

HOW THE PIECES COME TOGETHER

The three pre-assembled Trunks of Stepper Cluster M4 are designed to fit with each other to form the overall finished assembly.
Trunks I and II will sit tightly together to create the majority of the assembly, while Trunk III will remain separate.

See Sheet 12 for assembly order and details.

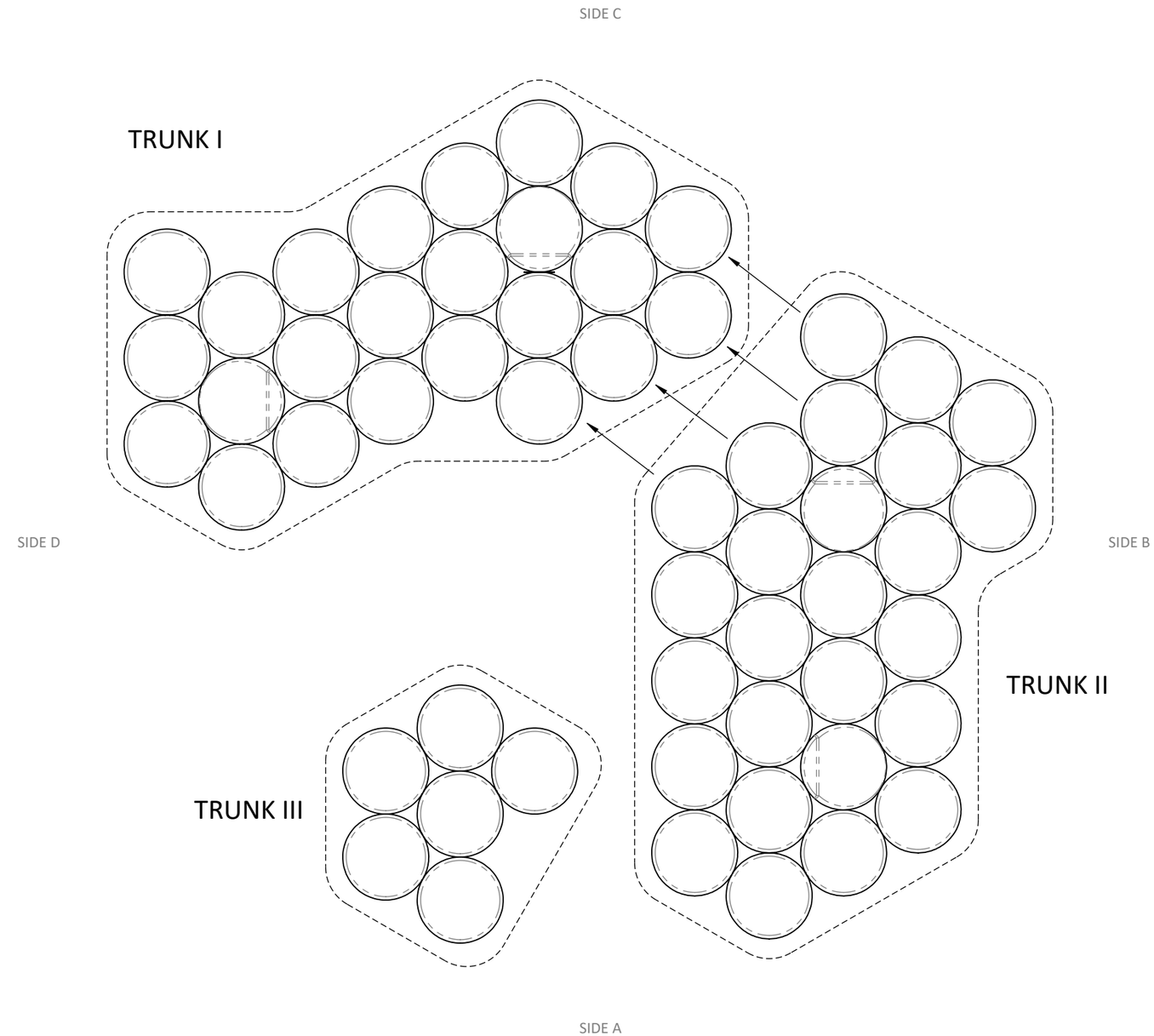

PROPERTY OF EARTHSCAPE PLAY INC. - DO NOT COPY. DO NOT DISTRIBUTE.

WHAT THE FINISHED PRODUCT LOOKS LIKE

Review the overall site layout (by others) to understand the locations and orietnation of the Stepper CLuster M4. The location of the Stepper CLuster M4 in relation to other site elements is not within the scope of these instructions and should be provided by others.

P01 is a poured-in-place concrete pad used to support and anchor Stepper Cluster M4. The concrete pad is to be provided by the installer if a suitable pad is not already provided.

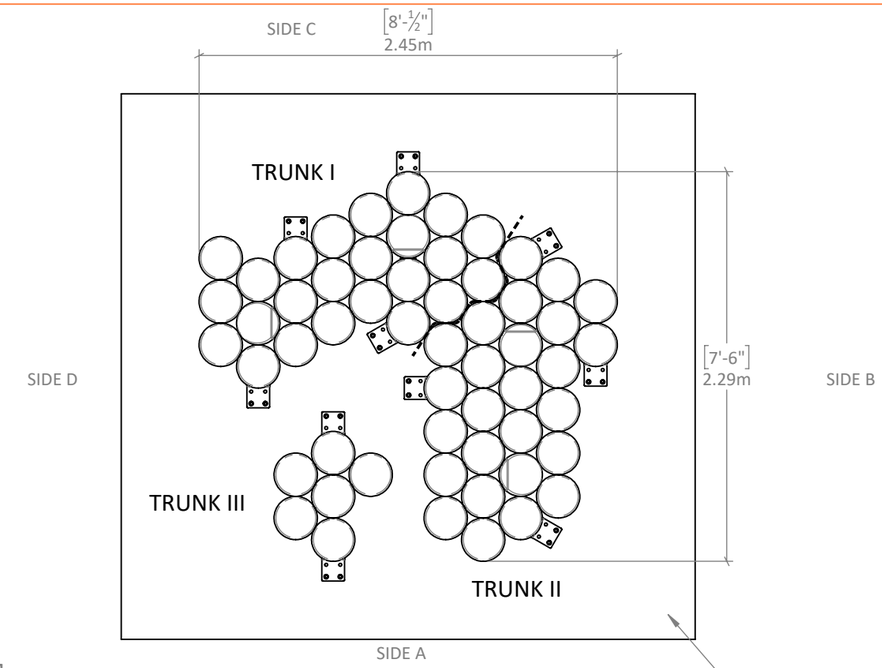

PLAN VIEW

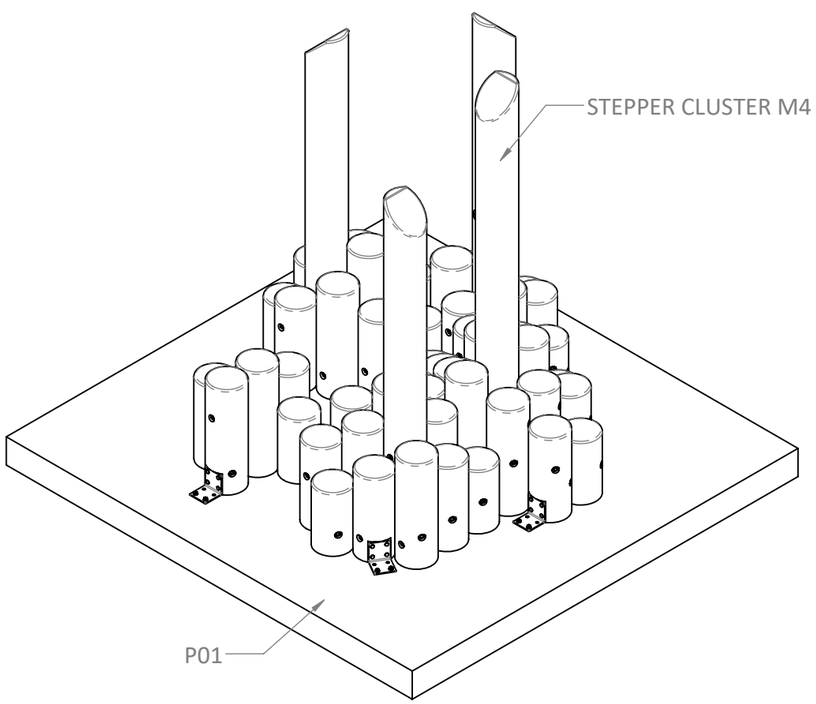

ISOMETRIC VIEW

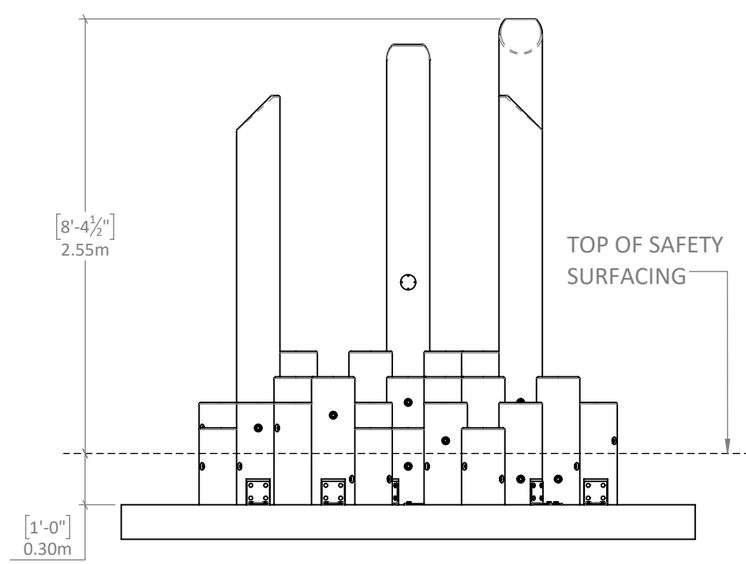

SIDE A

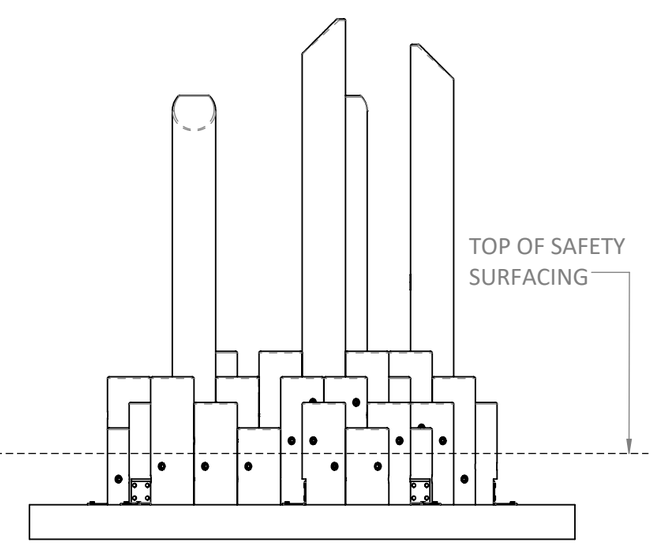

SIDE B

PROPERTY OF EARTHSCAPE PLAY INC. - DO NOT COPY. DO NOT DISTRIBUTE.

LOCATE PLAY EQUIPMENT

STEP 1 - LOCATING THE EQUIPMENT ON SITE

Lay out and mark the location of the the Stepper Cluster M4 Reference Points #1 & #2 on your site. The location of reference points relative to the site is not within the scope of these instructions and should be provided by others.

Reference Point #3 will be used only for final placement and anchoring of Trunk III and is provided here only for reference. See Sheet 12.

Ensure you know what the designed elevation is for the finished safety surface. All heights provided in these instructions will be relative to the finished safety surface. The finished surface elevation is not within the scope of these instructions and should be provided by others.

Ensure sufficient space is provided around Stepper Cluster M4 to maintain installation buffer as detailed in CSA or ASTM Specifications (sheet 2 & 3, as relevant to install location) when installed as a standalone unit.
Refer to project site plan when installed as a part of larger playground.

STEP 2 - LAYOUT CONCRETE PAD

Lay out and mark the outer edge of the concrete pad based off the dimensions provided in the Footing Plan View.

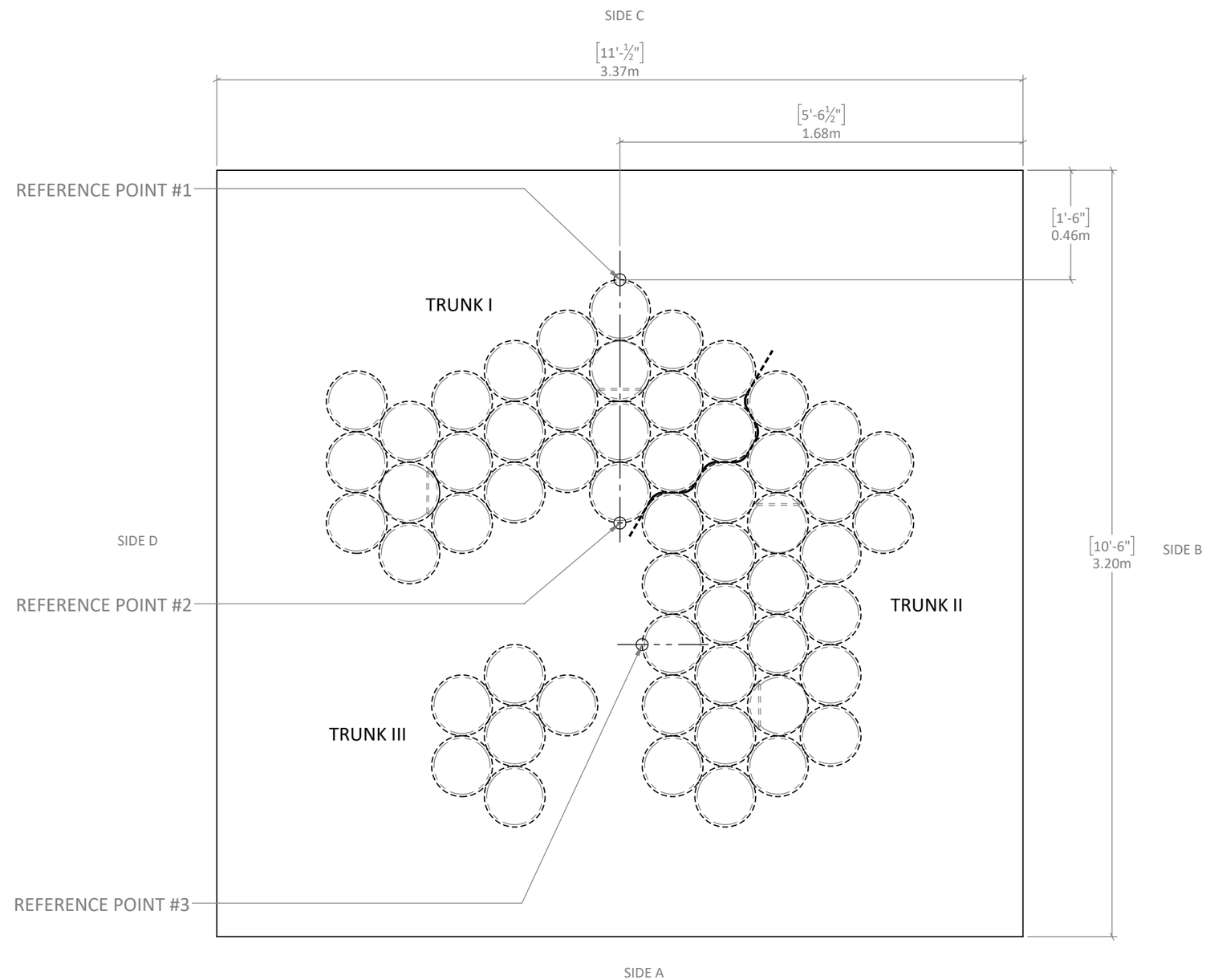

FOOTING PLAN VIEW

PROPERTY OF EARTHSCAPE PLAY INC. - DO NOT COPY. DO NOT DISTRIBUTE.

STEP 3 - EXCAVATE FOR CONCRETE PAD

Excavate area and prepare as per Concrete Placement Detail SD-001D on this sheet.

The foundation detail provided in these instructions has been developed assuming typical soil conditions specified in General Notes. If the subgrade encountered does not meet these conditions, the subgrade must be improved or revisions made to this detail. Revisions to the detail are the responsibility of the installer and it is strongly recommended any changes be reviewed and approved by a licensed professional engineer.

FOUNDATION NOTES:

1. SEE "GENERAL NOTES" SHEET FOR GENERAL NOTES.
2. TOP OF CONCRETE TO BE SET AT 300mm [12"] BELOW TOP OF SURFACING UNO.
3. SLAB TO BEAR ON MATERIAL BELOW THE FROST DEPTH, OR ALTERNATIVELY ON 300mm [12"] OF FREE DRAINING AGGREGATE, COMPACTED TO 98% SPDD.
4. CROSS SECTION ONLY. SEE PROJECT DRAWINGS FOR FOUNDATION SIZE, LAYOUT AND ADDITIONAL REBAR.

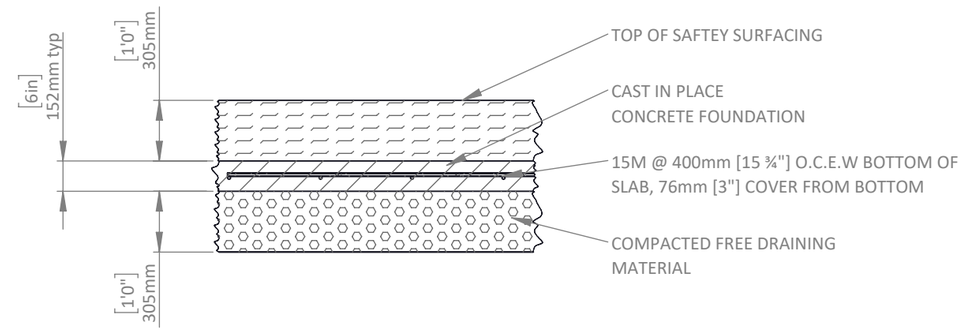

CONCRETE FOUNDATION DETAIL SD-001D

STEP 4 - POUR CONCRETE PAD

Pour concrete pad as per Concrete Placement Detail SD-001D on this sheet.
Ensure top of concrete is 300mm [12"] below finished safety surface.
Allow concrete to cure prior to proceeding to Step 5.

PROPERTY OF EARTHSCAPE PLAY INC. - DO NOT COPY. DO NOT DISTRIBUTE.

INSTALL DOCK BRACKETS

STEP 5 - INSTALL DOCK BRACKETS

Refer to Plan View drawing on this page for install positions of the Dock Brackets. Note the orientation and identify logs to receive Dock Brackets.

Identify the flat face cut into the base of indicated logs and install dock brackets such that the vertical of the dock bracket sits flush against it, with no portion protruding out from the uncut face of the log. The horizontal of the dock bracket should sit flush with the base of the Stepper Cluster L5 extending away from the log. See Detail A.

Fasten each dock bracket to the log using (4) Assy SK A2 8x100mm SS screws.

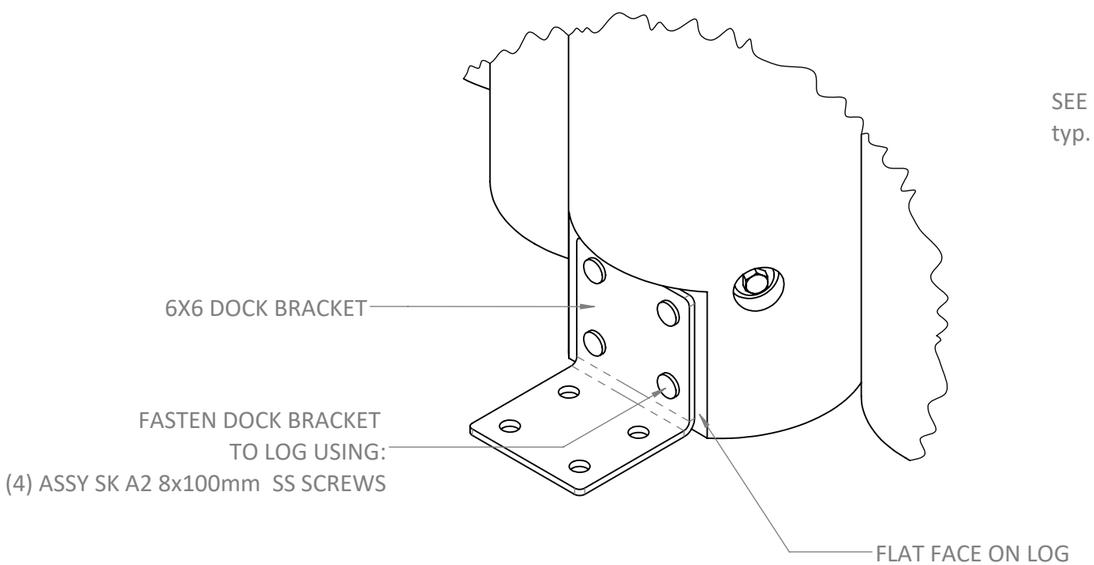

DETAIL A

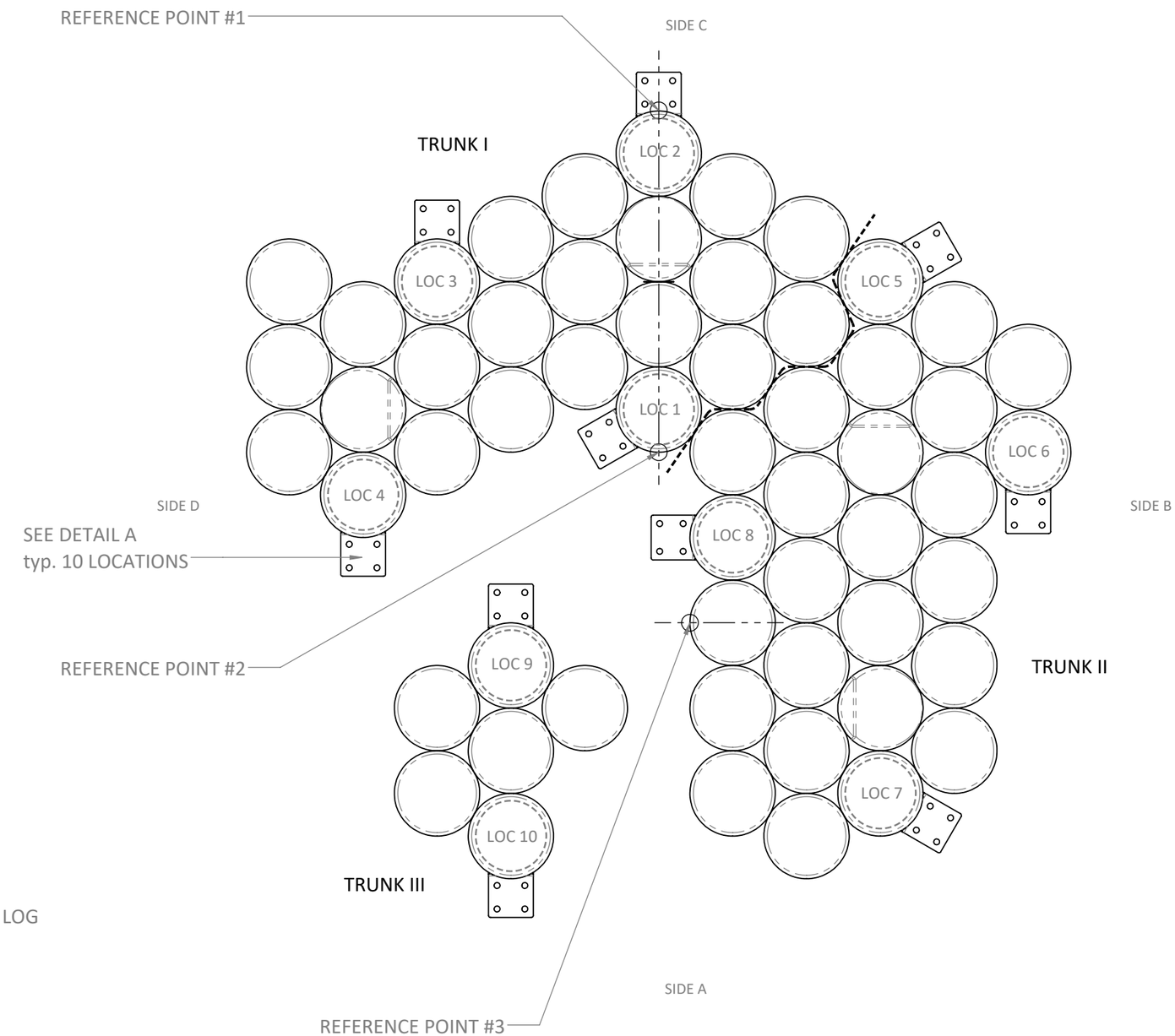

PLAN VIEW

PROPERTY OF EARTHSCAPE PLAY INC. - DO NOT COPY. DO NOT DISTRIBUTE.

SECURE STEPPER CLUSTER ON PAD

STEP 6 - SECURE STEPPER CLUSTER TO CONCRETE PAD

Ensure shipping dunnage has been removed from all Trunks.

Position the three Trunks of Stepper Cluster M4 on concrete pad P01 as per plan view on this sheet, using Reference Points marked on Stepper Cluster M4 and on site. Ensure Trunks I and II are as tightly aligned as possible.

Anchor the Dock Brackets to the concrete pad as per Detail B on this sheet. Total of 10 locations.

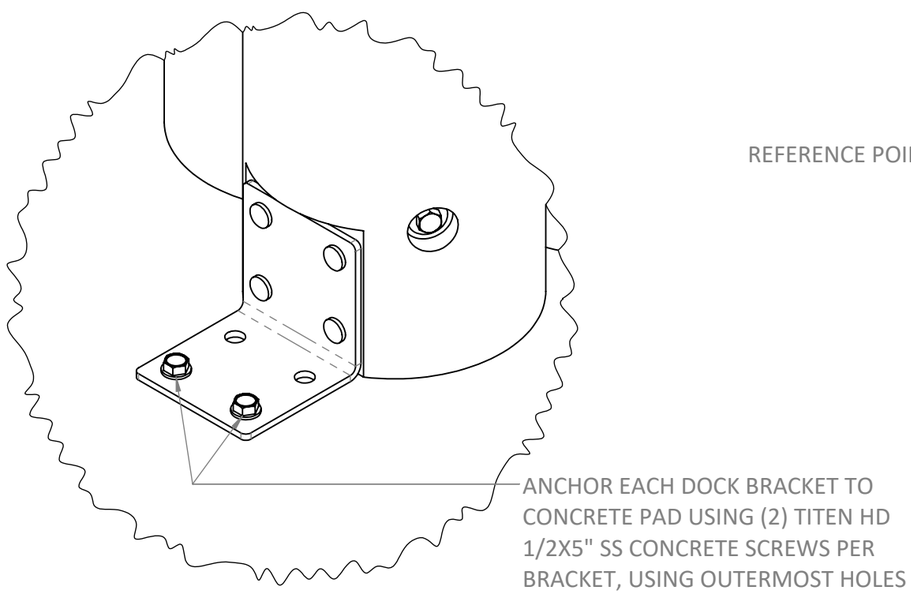

DETAIL B

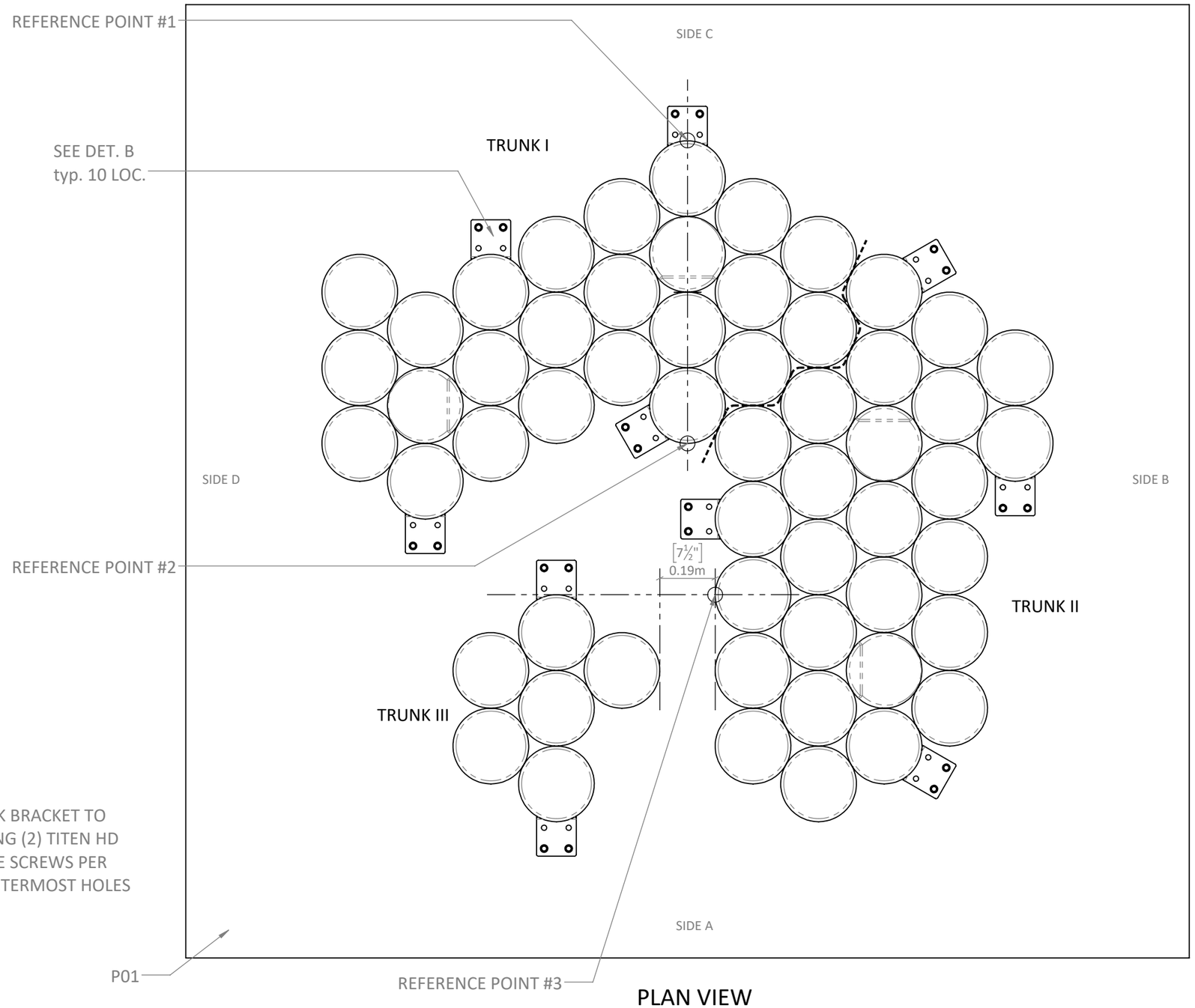

PLAN VIEW

PROPERTY OF EARTHSCAPE PLAY INC. - DO NOT COPY. DO NOT DISTRIBUTE.

GENERAL NOTES

STEPPER CLUSTER M4

FOR CANADIAN INSTALLATION SITES USE THESE NOTES

GENERAL NOTES

1. THIS DRAWING IS THE PROPERTY OF EARTHSCAPE. DO NOT COPY OR DISTRIBUTE WITHOUT PERMISSION.
2. EARTHSCAPE RESERVES OWNERSHIP OF ALL DRAWINGS, SPECIFICATIONS, AND OTHER DOCUMENTS, INCLUDING THOSE IN ELECTRONIC FORM, AUTHORED BY EARTHSCAPE. UPON SIGNING CONTRACT, EARTHSCAPE GRANTS THE OWNER LIMITED LICENSE TO USE THE INSTRUMENTS OF SERVICE SOLELY FOR USING AND MAINTAINING, OR ADDING TO THE PROJECT
3. ENGINEERING AND STRUCTURAL REVIEW: EARTHSCAPE PROVIDES STAMPED DRAWINGS AND/OR STRUCTURAL LOAD TESTING FOR ONTARIO, AS REQUIRED BY CSA Z614. LOCAL ENGINEERING APPROVAL FOR JURISDICTIONS OUTSIDE ONTARIO, IF REQUIRED, TO BE PROVIDED BY OTHERS.
4. EARTHSCAPE DESIGNS AND ENGINEERS FOR A FROST PENETRATION DEPTH OF 1200mm. SLAB ON GRADE CONSTRUCTION IS SUBJECT TO FROST MOVEMENTS. FREE DRAINING SOIL UNDER THE FOOTING IS USED TO MINIMIZE FROST EFFECTS. OVERALL TOWER/SLAB MOVEMENT MAY OCCUR.
5. INSPECTION AND TESTING: INSPECTION, TESTING (INCLUDING CONCRETE TESTING), PRE-CONSTRUCTION SURVEYS TO BE COMPLETED BY OTHERS.
6. SURFACING: WHEN AN IMPACT-ABSORBING SURFACE MATERIAL IS REQUIRED, IT MUST COMPLY WITH CSA Z614 (MOST RECENT EDITION) FOR THE DEFINED FALL HEIGHT OF THE EQUIPMENT SPECIFIED IN DRAWINGS BY EARTHSCAPE OR A CONTRACTUALLY OBLIGATED CRITICAL HEIGHT SPECIFIED IN ADVANCE. ENSURE USE ZONES, SAFETY ZONES, AND/OR PROTECTIVE SURFACING ZONES AROUND ALL PLAY EQUIPMENT ARE COMPLIANT WITH CSA Z614 (MOST RECENT EDITION) - BY OTHERS.
7. SURVEY AND FACILITIES: SURVEY WORK INCLUDING BENCHMARKS, LINES AND LEVELS, PRE-CONSTRUCTION SURVEY, AS-BUILT DRAWINGS BY OTHERS
8. THESE DRAWINGS ARE INTENDED TO BE PRINTED AT 11" X 17" PAGE SIZE. DO NOT SCALE
9. ALL MEASUREMENTS ARE IN METRES (m) UNLESS OTHERWISE STATED
10. EQUIPMENT SHALL COMPLY WITH THE REQUIREMENTS OF CAN/CSA-Z614 (MOST RECENT EDITION) "CHILDREN'S PLAYSPACES AND EQUIPMENT"
11. VISUAL DETAILS INCLUDING BUT NOT LIMITED TO: NET SPACING, ROPE APPEARANCE AND COLOURS ARE FOR CONCEPTUAL PURPOSES ONLY
12. ALWAYS WEAR PROPER PPE AND FOLLOW SAFE PRACTICES.
13. ALL WORK SHALL BE COMPLETED IN ACCORDANCE WITH THE OCCUPATIONAL HEALTH AND SAFETY ACT.
14. CONTRACTOR IS RESPONSIBLE FOR CONFIRMING ALL SITE CONDITIONS AND REPORTING DISCREPENCIES TO EARTHSCAPE IMMEDIATELY.
15. EARTHSCAPE IS NOT RESPONSIBLE FOR THIRD PARTY USE OF THESE DRAWINGS

FASTENERS:

1. METRIC/IMPERIAL DIAMETER CONVERSIONS OF TYPICAL SIZES:
    1. 8mm=5/16", 10mm=3/8", 12mm=1/2", 25mm=1"
    2. ROUND UP TO NEAREST STANDARD LENGTH FOR MANUFACTURER
2. ALL FASTENERS ARE TO BE STAINLESS STEEL (UNLESS OTHERWISE NOTED)
3. ALL BOLT HOLES SHALL BE PRE-DRILLED AND SHALL BE NOT LESS THAN 1mm AND NOT GREATER THAN 2mm LARGER THAN THE NOMINAL HOLE DIAMETER
4. FOR PARTIALLY THREADED SCREWS, EMBED FULL THREAD INTO SECONDARY MEMBER OR TO A DEPTH AS SPECIFIED ON DRAWINGS.
5. WHERE PRE-DRILLING OF SCREWS IS RECOMMENDED BY THE SCREW MANUFACTURER, HOLE DIAMETER TO BE STRICTLY AS PER MANUFACTURER'S INSTRUCTIONS.
6. DO NOT USE IMPACT DRILLS FOR SCREW INSTALLATION.
7. DO NOT USE A HAMMER TO ENGAGE THE FASTENER WITH THE WOOD.
8. ALL FASTENERS TO BE INSTALLED AS POSITIONED ON DRAWINGS.
9. ALL BOLTED CONNECTIONS ARE TO BE SECURED USING VIBRA-TITE "VC-3" THREAD-LOCKING FLUID OR EQUIVILENT

EXCAVATION AND BACKFILL

1. STRIP ALL TOP SOIL, PAVING, AND DELETERIOUS MATERIAL FROM UNDER FOOTINGS.
2. LOCATE ALL SERVICES PRIOR TO COMPLETING EXCAVATION.
3. ALL FOOTINGS SHALL BE PLACED AT A MINIMUM OF 1200mm BELOW GRADE UNLESS OTHERWISE NOTED ON THE DRAWINGS.
4. SUPPORTING SUBGRADE AND FILL TO HAVE A MINIMUM BEARING CAPACITY OF 150 kPa.
5. ALL FOOTINGS AND SLABS TO BE PLACED ON EITHER NATIVE GRAVEL/SAND/CLAY OR 150mm OF GRANULAR A COMPACTED TO A MINIMUM STANDARD PROCTOR DRY DENSITY OF 98%.
6. BENEATH 150mm TOP LAYER OF COMPACTED GRANULAR A, GRANULAR B FILL CAN BE USED AS REQUIRED PLACED IN MAXIMUM 200mm LIFTS, COMPACTED TO A STANDARD PROCTOR DRY DENSITY OF 96%.
7. CONTRACTOR IS RESPONSIBLE FOR SUPPORT OF EXCAVATIONS DURING CONSTRUCTION AS REQUIRED.

CONCRETE

1. ALL CONCRETE WORK AND MATERIALS SHALL BE IN ACCORDANCE WITH CAN/CSA A23.1/2
2. ALL REINFORCING STEEL TO BE IN ACCORDANCE WITH CAN/CSA A23.1/2 INCLUDING FABRICATION, DETAILING, LAP SPLICES, PLACEMENT, FIXING AND COVER.
3. REINFORCING STEEL SHALL COMPLY WITH CAN/CSA G40.18
4. DO NOT ADD WATER TO CONCRETE ONSITE.
5. ENSURE A MINIMUM COVER OF 75mm TO THE GROUND IN ALL BELOW GRADE CONCRETE.
6. CONCRETE MATERIAL TO BE:
    1. FOOTINGS: CLASS F-2 CONCRETE WITH A MINIMUM 28 DAY COMPRESSIVE STRENGTH OF 25 MPa, MAXIMUM WATER/CEMENT RATIO OF 0.55, MAXIMUM COARSE AGGREGATE SIZE OF 20mm, 4-7% AIR CONTENT, AND A MAXIMUM SLUMP OF 50-100mm.
    2. SLAB ON GRADE: CLASS C-2 CONCRETE WITH A MINIMUM 28 DAY COMPRESSIVE STRENGTH OF 32 MPa, MAXIMUM WATER/CEMENT RATIO OF 0.45, MAXIMUM COARSE AGGREGATE SIZE OF 20mm, 5-8% AIR CONTENT AND A MAXIMUM SLUMP OF 50-100mm.
7. CONCRETE REINFORCING TO DEFORMED MINIMUM YIELD STRENGTH OF 400 MPa
8. PIT RUN GRAVEL WILL NOT BE ACCEPTABLE.
9. ALL REINFORCING CHAIRS SHALL BE PLASTIC
10. ALL FORM OIL TO BE NON-STAINING MINERAL OIL, FREE OF KEROSENE.
11. WELDED WIRE MESH SHALL BE IN ACCORDANCE WITH ASTM A1064.
12. VIBRATE ALL CONCRETE TO ENSURE THAT CONCRETE IS FREE FROM VOIDS AND OTHER DEFECTS.
13. MOIST CURE ALL CONCRETE 7 DAYS.
14. IN HOT OR COLD WEATHER CONDITIONS TAKE ADDITIONAL PRECAUTIONS AS PER CAN/CSA A23.1/2.
15. UNLESS NOTED OTHERWISE, FASTEN ALL HARDWARE TO CONCRETE USING EITHER:
    1. SIMPSON STRONG TIE "TITEN HD" Ø½ X 5" SS CONCRETE SCREW
    2. THREADED ROD WITH SIMPSON STRONG TIE "SET 3G" OR HILTI "HY-200" EPOXY.
    3. REFER TO RESPECTIVE MANUFACTURER's INSTRUCTIONS FOR INSTALLATION PROCEDURE

FOR U.S. INSTALLATION SITES USE THESE NOTES

GENERAL NOTES

1. THIS DRAWING IS THE PROPERTY OF EARTHSCAPE. DO NOT COPY OR DISTRIBUTE WITHOUT PERMISSION.
2. EARTHSCAPE RESERVES OWNERSHIP OF ALL DRAWINGS, SPECIFICATIONS, AND OTHER DOCUMENTS, INCLUDING THOSE IN ELECTRONIC FORM, AUTHORED BY EARTHSCAPE. UPON SIGNING CONTRACT, EARTHSCAPE GRANTS THE OWNER LIMITED LICENSE TO USE THE INSTRUMENTS OF SERVICE SOLELY FOR USING AND MAINTAINING, OR ADDING TO THE PROJECT
3. ENGINEERING AND STRUCTURAL REVIEW: EARTHSCAPE PROVIDES STAMPED DRAWINGS AND/OR STRUCTURAL LOAD TESTING FOR ONTARIO, AS REQUIRED BY ASTM F-1487-17. LOCAL ENGINEERING APPROVAL FOR JURISDICTIONS OUTSIDE ONTARIO, IF REQUIRED, TO BE PROVIDED BY OTHERS.
4. EARTHSCAPE DESIGNS AND ENGINEERS FOR A FROST PENETRATION DEPTH OF 48". SLAB ON GRADE CONSTRUCTION IS SUBJECT TO FROST MOVEMENTS. FREE DRAINING SOIL UNDER THE FOOTING IS USED TO MINIMIZE FROST EFFECTS. OVERALL TOWER/SLAB MOVEMENT MAY OCCUR.
5. INSPECTION AND TESTING: INSPECTION, TESTING (INCLUDING CONCRETE TESTING), PRE-CONSTRUCTION SURVEYS TO BE COMPLETED BY OTHERS.
6. SURFACING: WHEN AN IMPACT-ABSORBING SURFACE MATERIAL IS REQUIRED, IT MUST COMPLY WITH ASTM F-1292 (MOST RECENT EDITION) FOR THE DEFINED FALL HEIGHT OF THE EQUIPMENT SPECIFIED IN DRAWINGS BY EARTHSCAPE OR A CONTRACTUALLY OBLIGATED CRITICAL HEIGHT SPECIFIED IN ADVANCE. ENSURE USE ZONES, SAFETY ZONES, AND/OR PROTECTIVE SURFACING ZONES AROUND ALL PLAY EQUIPMENT ARE COMPLIANT WITH ASTM F-1292 (MOST RECENT EDITION) - BY OTHERS.
7. SURVEY AND FACILITIES: SURVEY WORK INCLUDING BENCHMARKS, LINES AND LEVELS, PRE-CONSTRUCTION SURVEY, AS-BUILT DRAWINGS BY OTHERS
8. THESE DRAWINGS ARE INTENDED TO BE PRINTED AT 11" X 17" PAGE SIZE. DO NOT SCALE
9. ALL MEASUREMENTS ARE IN FEET-INCHES UNLESS OTHERWISE STATED
10. EQUIPMENT SHALL COMPLY WITH THE REQUIREMENTS OF ASTM F1487-17 "STANDARD CONSUMER SAFETY PERFORMANCE SPECIFICATION FOR PLAYGROUND EQUIPMENT"
11. VISUAL DETAILS INCLUDING BUT NOT LIMITED TO: NET SPACING, ROPE APPEARANCE AND COLOURS ARE FOR CONCEPTUAL PURPOSES ONLY
12. ALWAYS WEAR PROPER PPE AND FOLLOW SAFE PRACTICES.
13. ALL WORK SHALL BE COMPLETED IN ACCORDANCE WITH THE OCCUPATIONAL HEALTH AND SAFETY ACT.
14. CONTRACTOR IS RESPONSIBLE FOR CONFIRMING ALL SITE CONDITIONS AND REPORTING DISCREPENCIES TO EARTHSCAPE IMMEDIATELY.
15. EARTHSCAPE IS NOT RESPONSIBLE FOR THIRD PARTY USE OF THESE DRAWINGS

FASTENERS

1. METRIC/IMPERIAL DIAMTER CONVERSIONS:
    1. 8mm=5/16", 10mm=3/8", 12mm=1/2", 25mm=1"
    2. ROUND UP TO NEAREST STANDARD LENGTH FOR MANUFACTURER
2. ALL FASTENERS ARE TO BE STAINLESS STEEL (UNLESS OTHERWISE NOTED)
3. ALL BOLT HOLES SHALL BE PRE-DRILLED AND SHALL BE NOT LESS THAN 3/64" AND NOT GREATER THAN 5/64" LARGER THAN THE NOMINAL HOLE DIAMETER
4. FOR PARTIALLY THREADED SCREWS, EMBED FULL THREAD INTO SECONDARY MEMBER OR TO A DEPTH AS SPECIFIED ON DRAWINGS.
5. WHERE PRE-DRILLING OF SCREWS IS RECOMMENDED BY THE SCREW MANUFACTURER, HOLE DIAMETER TO BE STRICTLY AS PER MANUFACTURER'S RECOMMENDATIONS.
6. DO NOT USE IMPACT DRILLS FOR SCREW INSTALLATION.
7. DO NOT USE A HAMMER TO ENGAGE THE FASTENER WITH THE WOOD.
8. ALL FASTENERS TO BE INSTALLED AS POSITIONED ON SHOP DRAWINGS.
9. ALL BOLTED CONNECTIONS ARE TO BE SECURED USING VIBRA-TITE "VC-3" THREAD-LOCKING FLUID OR EQUIVILENT

EXCAVATION AND BACKFILL

1. STRIP ALL TOP SOIL, PAVING, AND DELETERIOUS MATERIAL FROM UNDER FOOTINGS.
2. LOCATE ALL SERVICES PRIOR TO COMPLETING EXCAVATION.
3. ALL FOOTINGS SHALL BE PLACED AT A MINIMUM OF 4' BELOW GRADE UNLESS OTHERWISE NOTED ON THE DRAWINGS.
4. SUPPORTING SUBGRADE AND FILL TO HAVE A MINIMUM BEARING CAPACITY OF 3000PSF.
5. ALL FOOTINGS AND SLABS TO BE PLACED ON EITHER NATIVE GRAVEL/SAND/CLAY OR 6" OF GRANULAR A COMPACTED TO A MINIMUM STANDARD PROCTOR DRY DENSITY OF 98%.
6. BENEATH 6" TOP LAYER OF COMPACTED GRANULAR A, GRANULAR B FILL CAN BE USED AS REQUIRED PLACED IN MAXIMUM 8" LIFTS, COMPACTED TO A STANDARD PROCTOR DRY DENSITY OF 96%.
7. CONTRACTOR IS RESPONSIBLE FOR SUPPORT OF EXCAVATIONS DURING CONSTRUCTION AS REQUIRED.

CONCRETE

1. ALL CONCRETE WORK AND MATERIALS SHALL BE IN ACCORDANCE WITH ACI-301
2. ALL REINFORCING STEEL TO BE IN ACCORDANCE WITH ASTM A615 AND ACI-301 INCLUDING FABRICATION, DETAILING, LAP SPLICES, PLACEMENT, FIXING AND COVER.
3. REINFORCING STEEL SHALL COMPLY WITH ASTM A615
4. DO NOT ADD WATER TO CONCRETE ONSITE.
5. ENSURE A MINIMUM COVER OF 3" TO THE GROUND IN ALL BELOW GRADE CONCRETE.
6. CONCRETE MATERIAL TO BE:
    1. FOOTINGS AND SLABS: CONCRETE WITH A MINIMUM 28 DAY COMPRESSIVE STRENGTH OF 4000 PSI, MAXIMUM WATER/CEMENT RATIO OF 0.50, MAXIMUM COARSE AGGREGATE SIZE OF 3/4", 4-7% AIR CONTENT (WHERE CONCRETE PLACED ABOVE FROST), AND A MAXIMUM SLUMP OF 2 - 4 INCHES.
7. CONCRETE REINFORCING TO DEFORMED MINIMUM YIELD STRENGTH OF 58000 PSI
8. PIT RUN GRAVEL WILL NOT BE ACCEPTABLE.
9. ALL REINFORCING CHAIRS SHALL BE PLASTIC
10. ALL FORM OIL TO BE NON-STAINING MINERAL OIL, FREE OF KEROSENE.
11. WELDED WIRE MESH SHALL BE IN ACCORDANCE WITH ASTM A1064.
12. VIBRATE ALL CONCRETE TO ENSURE THAT CONCRETE IS FREE FROM VOIDS AND OTHER DEFECTS.
13. MOIST CURE ALL CONCRETE 7 DAYS.
14. IN HOT OR COLD WEATHER CONDITIONS TAKE ADDITIONAL PRECAUTIONS AS PER ACI 305 OR 306 RESPECTIVELY.
15. UNLESS NOTED OTHERWISE, FASTEN ALL HARDWARE TO CONCRETE USING EITHER:
    1. SIMPSON STRONG TIE "TITEN HD" Ø½ X 5" SS CONCRETE SCREW
    2. THREADED ROD WITH SIMPSON STRONG TIE "SET 3G" OR HILTI "HY-200" EPOXY
    3. REFER TO RESPECTIVE MANUFACTURER'S INSTRUCTIONS FOR INSTALLATION PROCEDURE

PROPERTY OF EARTHSCAPE PLAY INC. - DO NOT COPY. DO NOT DISTRIBUTE.

INSTALLATION INSTRUCTIONS

EARTHSCAPE COLLECTIONS

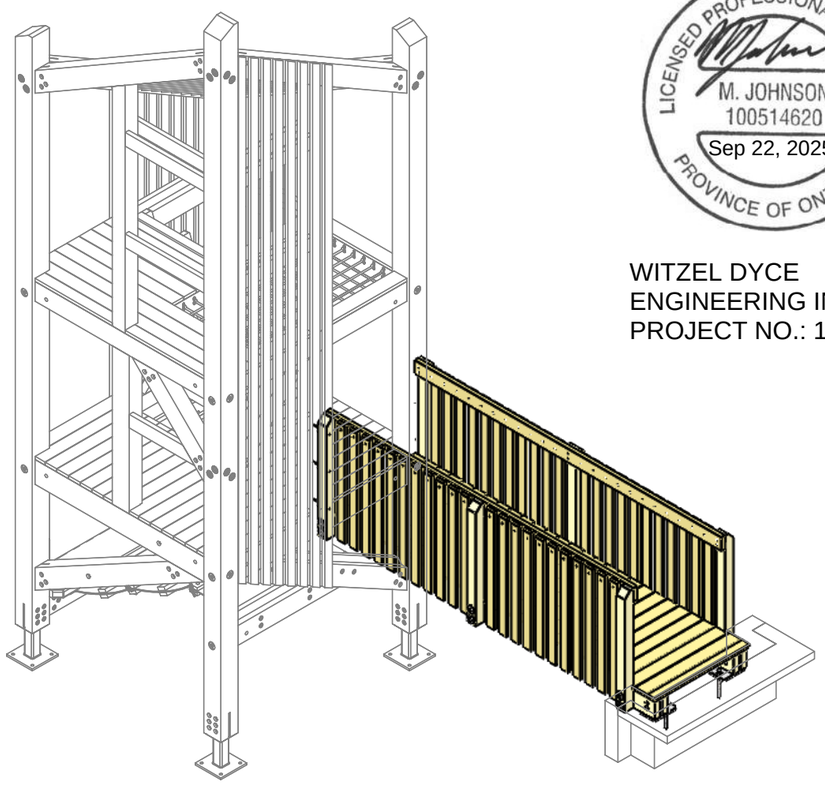

LICENSED PROFESSIONAL ENGINEER
M. JOHNSON
100514620
Sep 22, 2025
PROVINCE OF ONTARIO

WITZEL DYCE
ENGINEERING INC.
PROJECT NO.: 12936-165

MODIFIED TIMBER BRIDGE 12'

THESE INSTRUCTIONS APPLY TO THE FOLLOWING VERSIONS OF THIS PRODUCT:

1209039 - MODIFIED TIMBER BRIDGE 12'

PROJECT NUMBER: ESC0499
DESIGNED FOR: HURLD PARK
TO BE INSTALLED IN: WOBURN, MA

NOTE: COLOURS SHOWN ARE REPRESENTATIONAL AND MAY NOT BE THE SAME AS THOSE OF THE SUPPLIED PRODUCT

FOR CSA AND ASTM SPECIFICATIONS AND GENERAL NOTES SEE MAIN STRUCTURE INSTALLATION PACKAGE

DATE DOCUMENT RELEASED 2025-09-18
DOCUMENT NUMBER: 1209450-R1

PROPERTY OF EARTHSCAPE PLAY INC. - DO NOT COPY. DO NOT DISTRIBUTE.

PLEASE READ ALL INSTRUCTIONS

Before starting to install this equipment be sure to read through and understand these instructions.

If you have any questions, contact your Earthscape Representative for assistance before proceeding.

MEASUREMENTS AND STANDARDS

Measurements have been provided in both metres and [feet-inches]. Ensure to follow standards noted for the location in which this play equipment is being installed. Those marked CSA are to be used in Canada and those marked ASTM to be used in the United States.

LIST OF ABBREVIATIONS

AYC = Alaskan Yellow Cedar
WRC = Western Red Cedar
DPS = Designated Play Surface
SS = Stainless Steel
HDG = Hot Dipped Galvanized
WWM = Welded Wire Mesh
TYP = Typical
C/W = Complete With
UNO = Unless Noted Otherwise
EWF = Engineered Wood Fiber
PIP = Poured-In-Place Rubber Surfacing
PT = Pressure Treated

TOOLS SUPPLIED WITH THIS PRODUCT

- No tools supplied

TOOLS THE INSTALLER NEEDS TO SUPPLY

- High torque drill
- Set of wood drill bits up to 1/2"
- T25 drive bit
- T40 drive bit
- Circular saw
- 1/2" Impact driver
- Socket set up to 1-1/8"
- Hammer Drill
- Concrete drill bit set up to and including size required by epoxy manufacturer to set 3/4" threaded rod 8" deep in concrete abutment
- Angle grinder (With course 24 grit sanding disks and metal cut off disks
- Transit or laser Level
- Rigging and lifting straps

EQUIPMENT THE INSTALLER NEEDS TO SUPPLY

- Machine to lift and position 400 kg [870 lb] pre-assembled wooden bridge.

INSTALLER CREW AND TIME REQUIRED

Number of people needed: 3
Typical total person-hours to install: 3

Time breakdown:
- 1 hours x 3 people to position and anchor the bridge in place

MATERIALS THE INSTALLER NEEDS TO SUPPLY

- Epoxy - Simpson Strong Tie "Set 3G" or Hilti "Hy-200"

WARNINGS

These instructions do not provide specific guidance on the use of tools or the lifting and moving heavy objects. It is assumed that competent people are installing this product who are familiar with using the tools and equipment required and are knowledgeable and skilled at lifting and positioning heavy objects.

PROPERTY OF EARTHSCAPE PLAY INC. - DO NOT COPY. DO NOT DISTRIBUTE.

MAKE SURE YOU HAVE ALL THE PARTS

Examine the equipment and ensure you have all the required parts listed in the table below.

PART IMAGE	ITEM NO.	PART NO.	DESCRIPTION	QTY.
SEE IMAGE THIS SHEET	1	1209039	PRE-ASSEMBLED MODIFIED WOODEN BRIDGE 12'	1
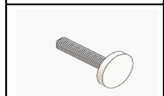	2	H16685	WOOD SCREW, WASHER HEAD M8X100, SS	4
	3	H16687	WOOD SCREW, WASHER HEAD M8X200, SS	6
	4	H20028	THREADED STUD 3/4"X 12" HDG	2
	5	H30080	WASHER 3/4" X 2" HDG	2
	6	H40046	HEX NUT 3/4-10 HDG	4

IMAGES OF FASTENERS IN THIS TABLE ARE REPRESENTATIONAL TO HELP IDENTIFY PARTS.

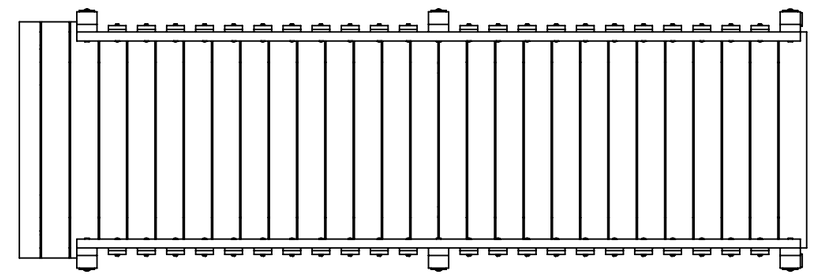

PLAN VIEW

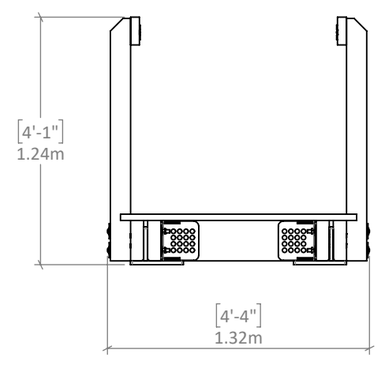

FRONT VIEW

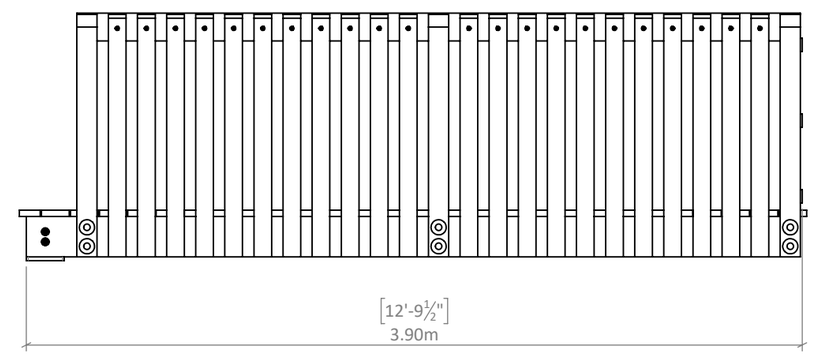

SIDE VIEW

TIMBER BRIDGE SHIPPED PRE-ASSEMBLED AS SHOWN
WEIGHT: 400 KG [870 LB]

PROPERTY OF EARTHSCAPE PLAY INC. - DO NOT COPY. DO NOT DISTRIBUTE.

ABUTMENT DETAILS

ABUTMENT DETAILS OVERVIEW

Before installing the bridge ensure the concrete abutment is cured and matches the specifications shown on this sheet.

Concrete to be provided by installer.

REACTION LOADS

- DL = 250 lbs
- LL = 900 lbs
- Playground loading = 1500 lbs (not to be considered with live load
- SL = 650 lbs
- WL = 625 lbs (perp to bridge)
- EQ = 75 lbs (perp to bridge)

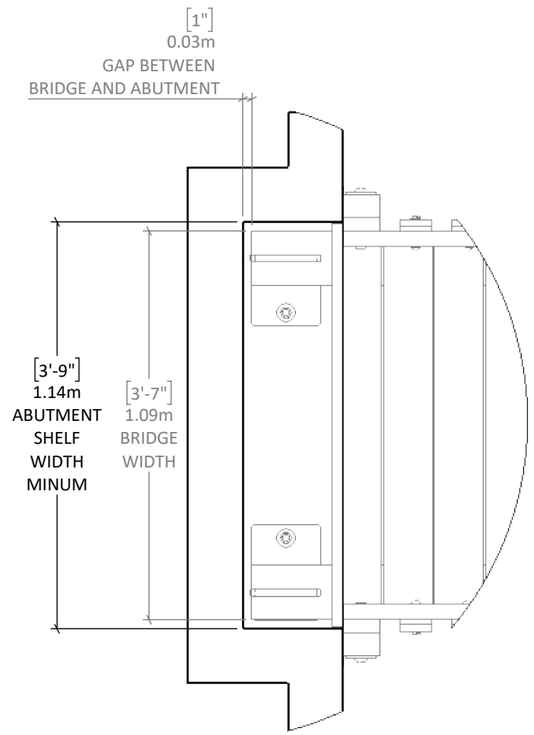

DETAIL A

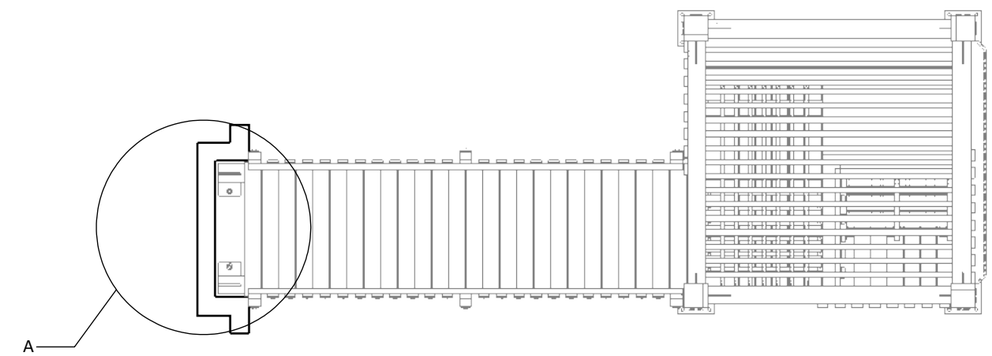

ABUTMENT PLAN VIEW

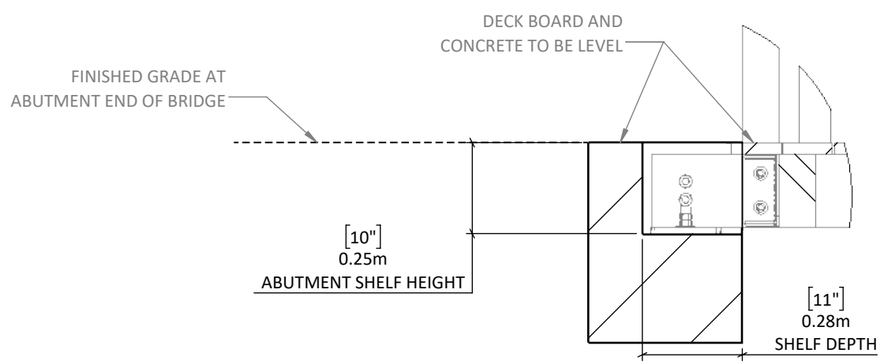

DETAIL B

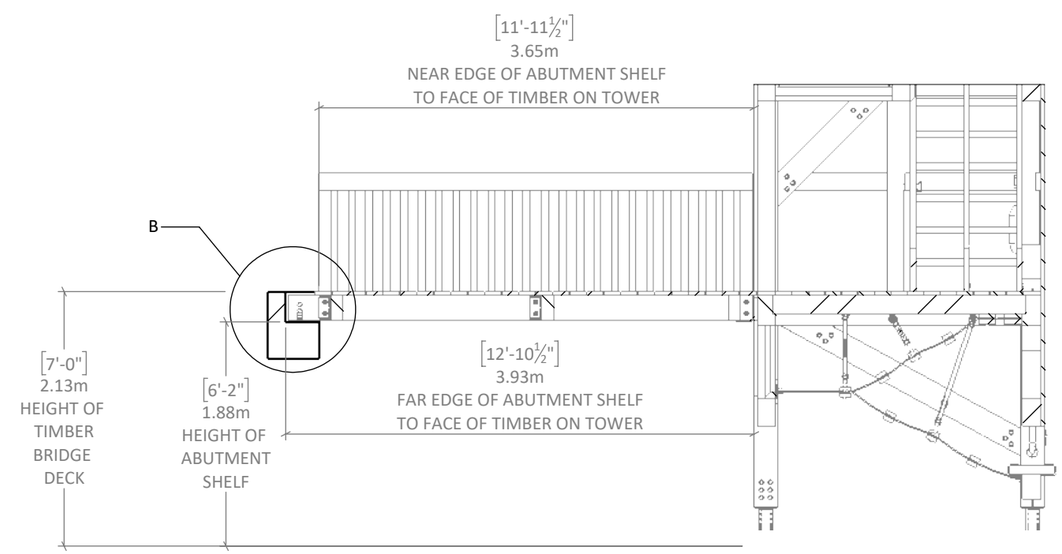

ABUTMENT LOCATION

PROPERTY OF EARTHSCAPE PLAY INC. - DO NOT COPY. DO NOT DISTRIBUTE.

PREP BRIDGE AND TOWER

MODIFIED TIMBER BRIDGE 12'

STEP 1 - CONFIRM WHERE THE ACCESSORY IS TO BE INSTALLED

Review the complete tower installation package to determine on which side this accessory is to be installed and what the finished product should look like.

STEP 2 - INSTALL BRIDGE PRIOR TO ANCHORING TOWERS TO FOUNDATION PAD

It might be necessary to make minor adjustments the position of the timber tower to suit the as-built bridge. Anchor tower after bridge has been installed. Ensure the tower opening is centered on the opening of the abutment, also the tower is parallel to the abutment face.

STEP 3 - PREP BRIDGE

Temporarily remove the end deckboards from both ends of bridge as per Figure 1. Make sure to note which end they came from and their orientation.

STEP 4 - ATTACH THE BRIDGE BRACKET TO TOWER

Attach the bridge bracket to the timber tower as shown in Section H-H.

STEP 5 - CONFIRM GAP BETWEEN TOWER AND ABUTMENT

Measure distance between the tower and the abutment concrete and compare to supplied bridge length. Pull tower away from concrete enough to be able to fit bridge between.

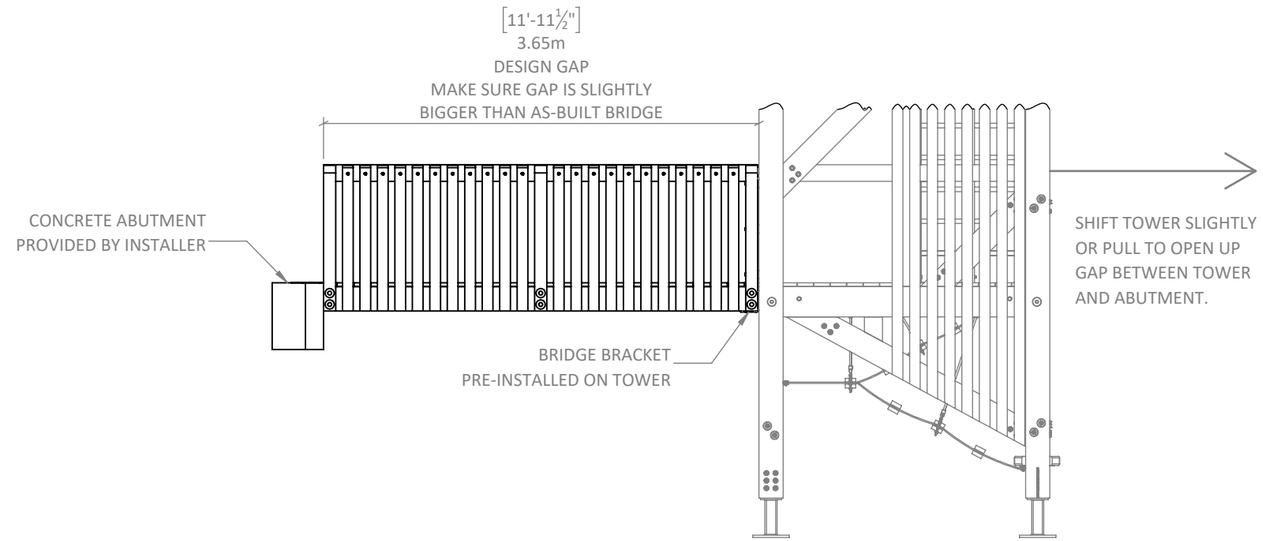

SIDE ELEVATION

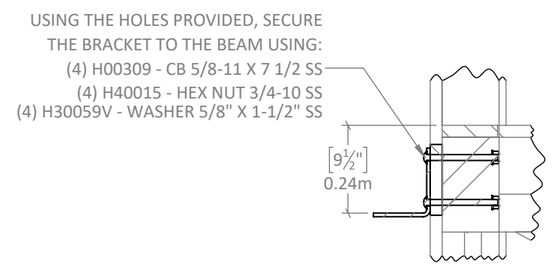

SECTION H-H

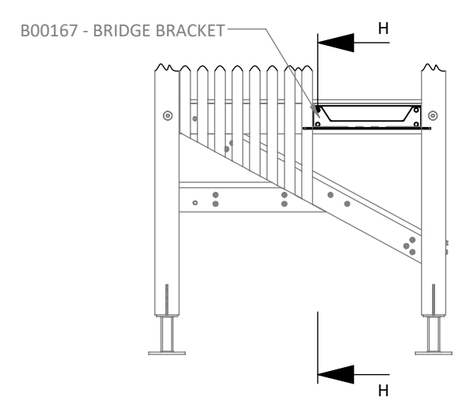

FRONT ELEVATION

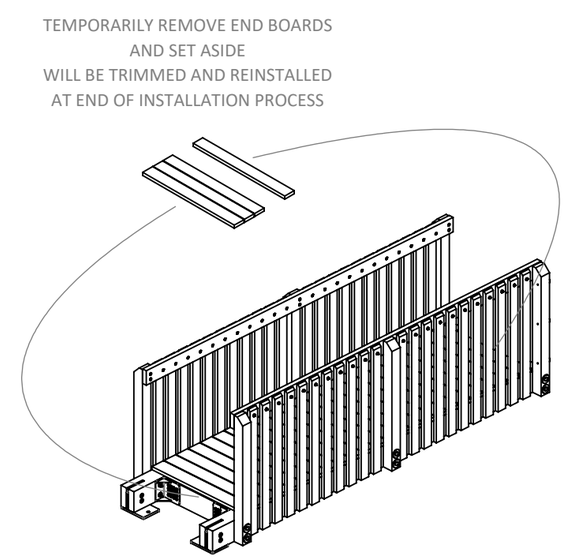

FIGURE 1

PROPERTY OF EARTHSCAPE PLAY INC. - DO NOT COPY. DO NOT DISTRIBUTE.

LIFT AND PLACE BRIDGE

MODIFIED TIMBER BRIDGE 12'

STEP 6 - LIFT AND PLACE BRIDGE

Lift bridge with appropriate equipment and move into position. Lower bridge on to the tower bracket and the concrete abutment. Ensure the bridge is centered in the tower opening and centered in the concrete abutment.

STEP 7 - ADJUST POSITION OF TOWERS

Draw the tower so the end of the bridge is tight to the tower and the bridge is sitting on the abutment. Ensure a gap is present from the end of the bridge to the concrete as shown in the plan view.

Make minor adjustments to the tower position to ensure both ends of the bridge are centered in the tower opening and the concrete abutment. Ensure the tower is tight to the end of the bridge.

STEP 8 - SECURE BRIDGE GUARDRAIL POSTS

Install screws through pre-drilled holes in the end guardrail posts into timber tower posts.

Pre-drill all screw holes as per general notes.

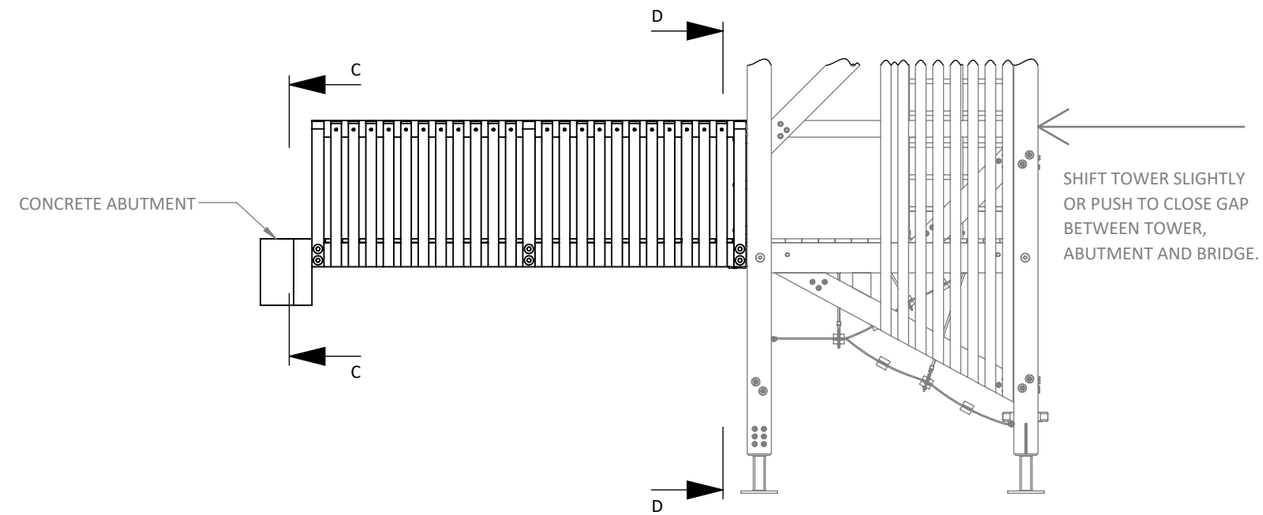

SIDE ELEVATION

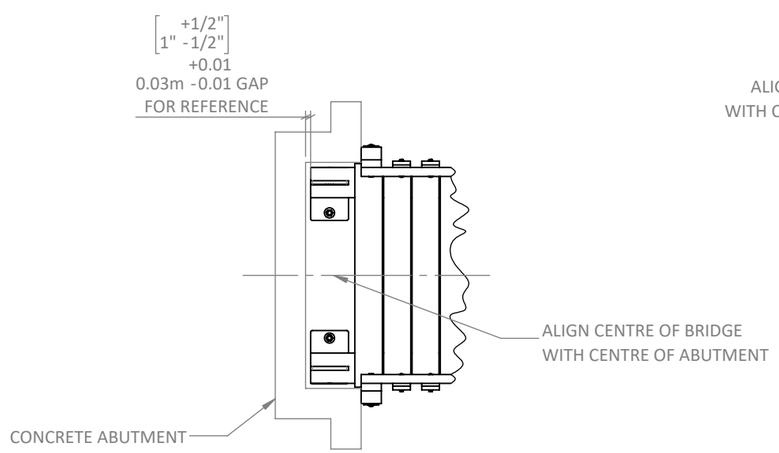

PLAN VIEW

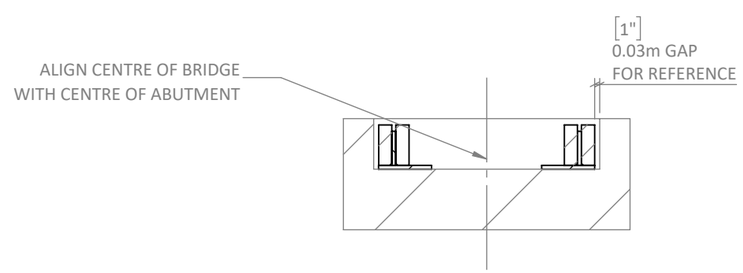

SECTION C-C
ABUTMENT SIDE

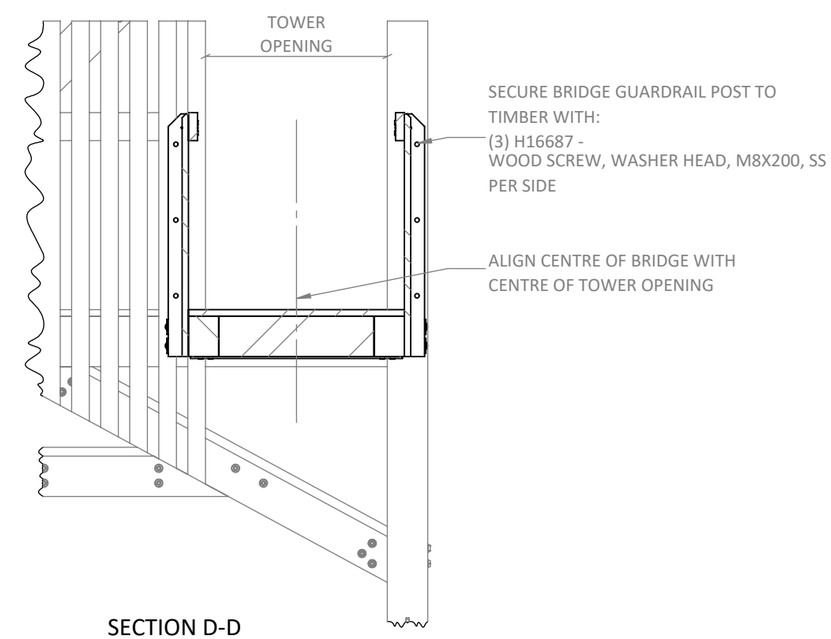

SECTION D-D
TOWER SIDE

PROPERTY OF EARTHSCAPE PLAY INC. - DO NOT COPY. DO NOT DISTRIBUTE.

STEP 9 - SECURE BRIDGE STRINGERS

Install screws through bottom of steel brackets into underside of bridge timber stringers.

Pre-drill all screw holes as per general notes in main installation package.

STEP 10 - SECURE BRIDGE TO ABUTMENT

Install threaded rod into concrete using epoxy, see general notes in the main installation package epoxy details. Cut and grind the top of the threaded rod after installation to ensure max two threads exposed.

Ensure a minimum threaded rod embedment depth of 6".

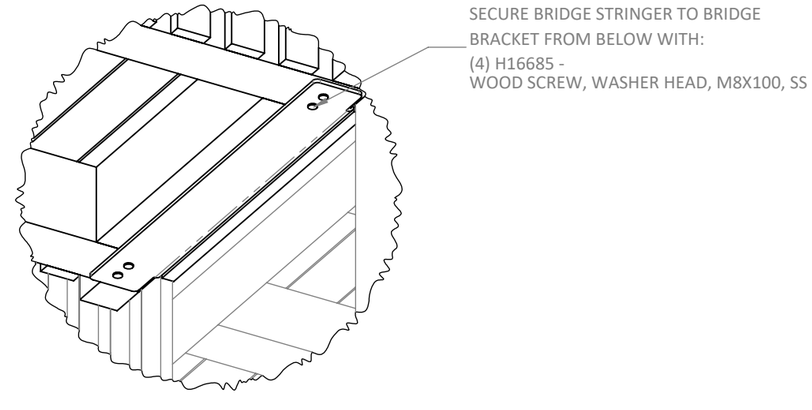

DETAIL E

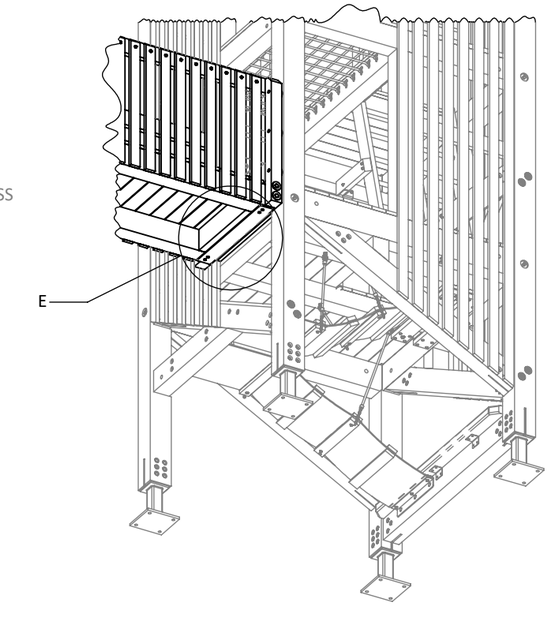

LOOKING UNDER BRIDGE

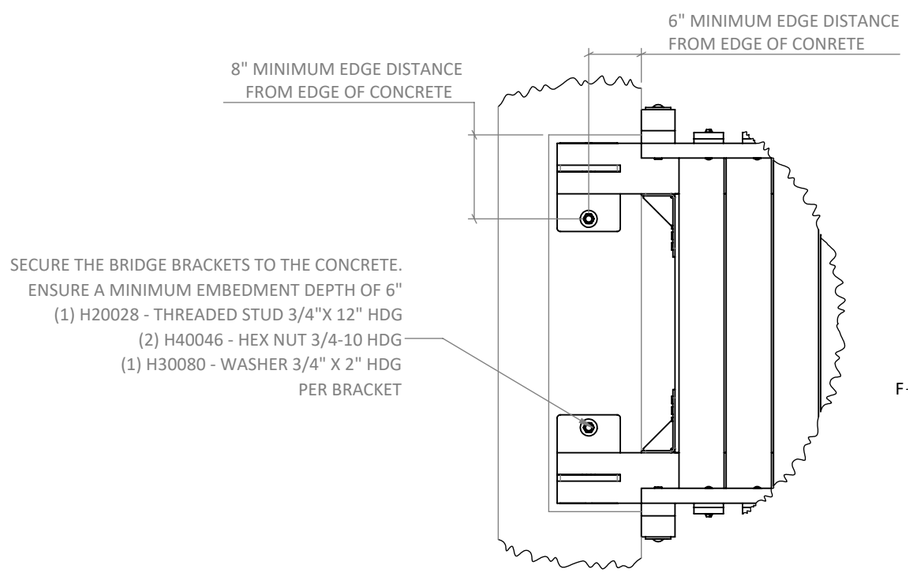

DETAIL F

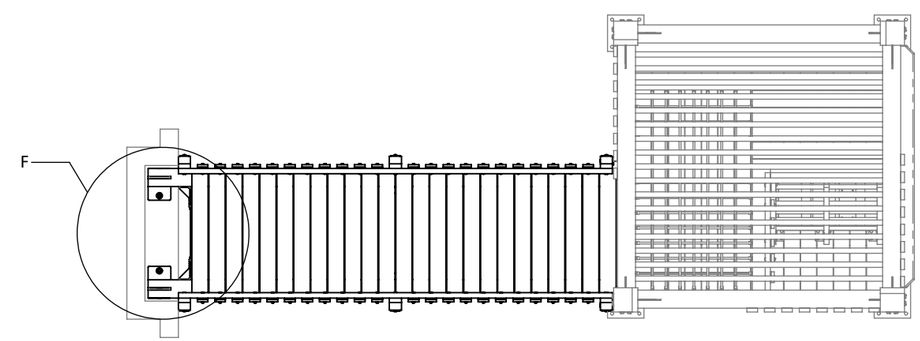

PLAN VIEW

PROPERTY OF EARTHSCAPE PLAY INC. - DO NOT COPY. DO NOT DISTRIBUTE.

REINSTALL DECKBOARDS

STEP 11 - REINSTALL DECKBOARDS AT TOWER

Trim the removed deckboards to suit the gap in decking between the bridge and tower.

Ensure a +/-6mm (1/4") gap between deckboards as per Detail K. Deckboards must not touch. Reinstall with the original screws.

STEP 12 - REINSTALL DECKBOARDS AT ABUTMENT

Trim the removed deckboards to suit the gap in decking between the bridge and the abutment. By design the deckboards are intended to be flush with the finished grade at the abutment.

Ensure a +/-6mm (1/4") gap between deckboards as per Detail J and L. Deckboards must not touch. Reinstall with the original screws.

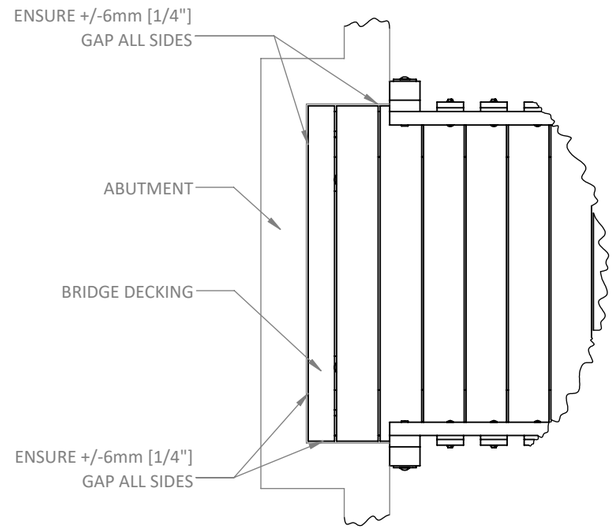

DETAIL L

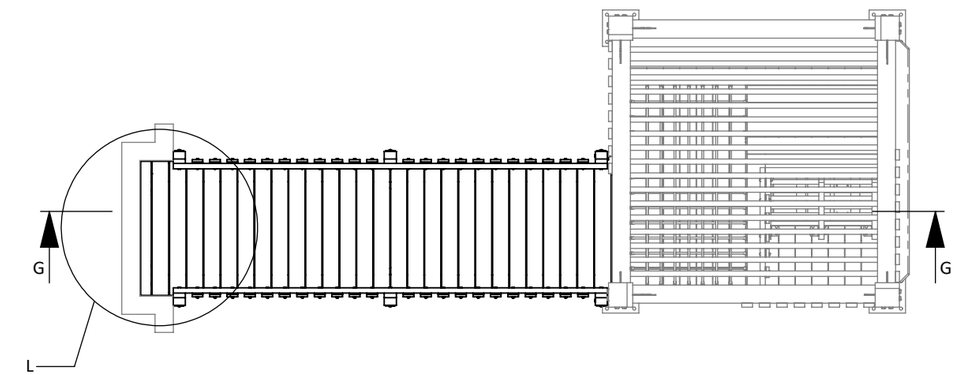

PLAN VIEW

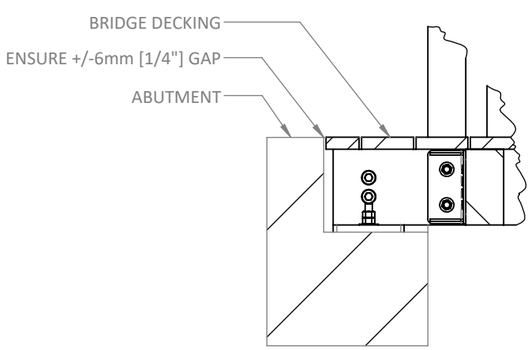

DETAIL J
DECKBOARDS AT ABUTMENT

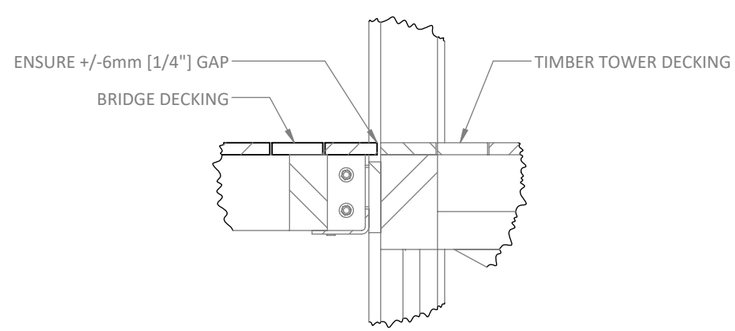

DETAIL K
DECKBOARDS AT TOWER

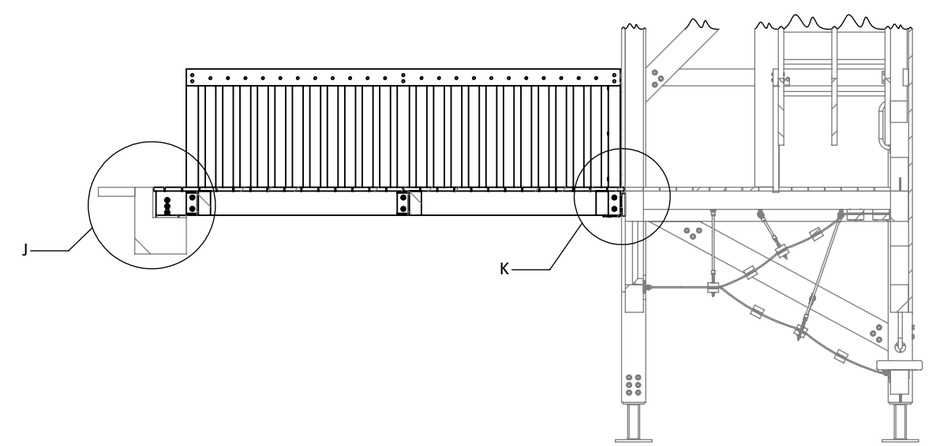

SECTION G-G

DATE DOCUMENT RELEASED 2025-09-18
DOCUMENT NUMBER: 1209450 - R1

PROPERTY OF EARTHSCAPE PLAY INC. - DO NOT COPY. DO NOT DISTRIBUTE.

INSTALLATION INSTRUCTIONS

EARTHSCAPE COLLECTIONS

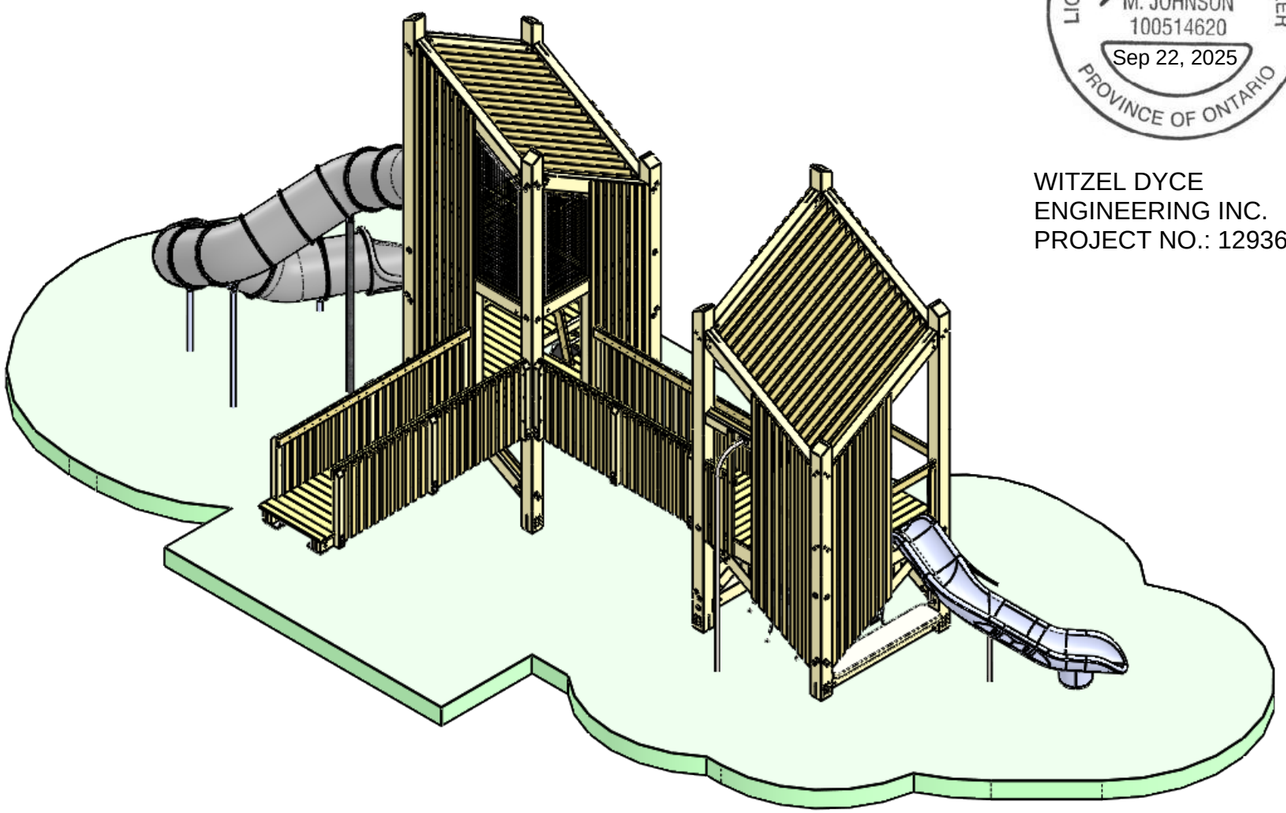

LICENSED PROFESSIONAL ENGINEER
M. JOHNSON
100514620
Sep 22, 2025
PROVINCE OF ONTARIO

WITZEL DYCE
ENGINEERING INC.
PROJECT NO.: 12936-165

COMBINED ASSEMBLY

THESE INSTRUCTIONS APPLY TO THE UNIQUE TOWER CONFIGURATION FOR:

PROJECT NUMBER: ESC0499
DESIGNED FOR: HURLD PARK
TO BE INSTALLED IN: WOBURN, MA

NOTE: COLOURS SHOWN ARE REPRESENTATIONAL AND MAY NOT BE THE SAME AS THOSE OF THE SUPPLIED PRODUCT

DATE DOCUMENT RELEASED 2025-09-18
DOCUMENT NUMBER: 1209315-R1

PROPERTY OF EARTHSCAPE PLAY INC. - DO NOT COPY. DO NOT DISTRIBUTE.

SPECIFICATIONS

INTENDED USER AGE GROUP: 5-12 y
MAXIMUM HEIGHT OF STRUCTURE: 24'0" ABOVE FINISHED PLAY SURFACE
MAXIMUM DESIGNATED FALL HEIGHT: 6'-8"
AREA OF SURFACING: 1420 ft²
APPROXIMATE AS SHIPPED WEIGHT:

- 1 LEVEL TIMBER TOWER - 4,350 LBS
- 2 LEVEL TIMBER TOWER - 5,500 LBS
- 10' WOODEN BRIDGE - 670 LBS
- 12' MODIFIED WOODEN BRIDGE - 870 LBS

RECOMMENDED INSTALLATION BUFFER

Play equipment requires a variety of offsets to other elements in a playground. The plan view on this page shows the minimum recommended area needed for installing this piece of play equipment by itself. Combining this play equipment with other pieces should be reviewed by a person with a Certified Playground Safety Inspector training.

The offset shown here includes a buffer beyond the ASTM requirements to account for fabrication and material variation.

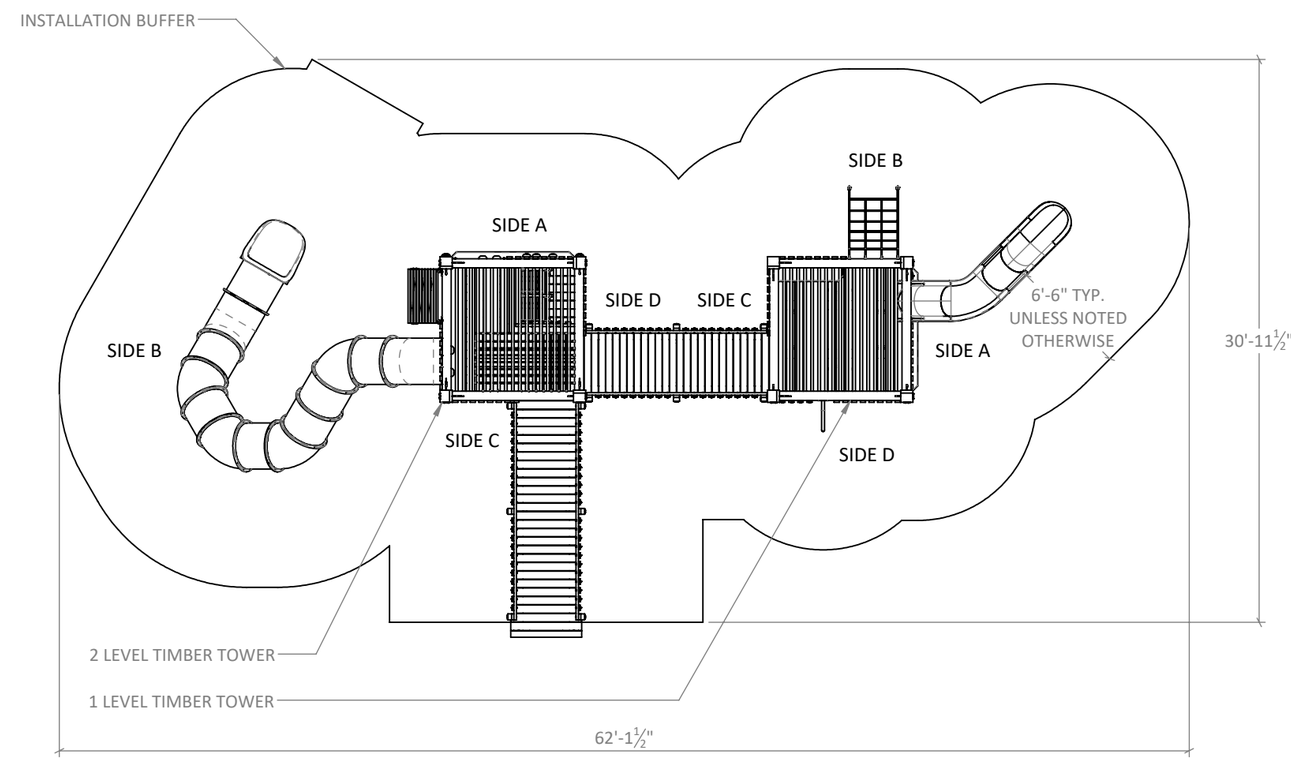

PROPERTY OF EARTHSCAPE PLAY INC. - DO NOT COPY. DO NOT DISTRIBUTE.

PLEASE READ ALL INSTRUCTIONS

Before starting to install this equipment be sure to read through and understand these instructions.

If you have any questions, contact your Earthscape Representative for assistance before proceeding.

Time, tools and materials noted on this sheet only cover the installation of the base timber tower. They do not include any of the add-ons. See separate installation packages to understand what additional time will be required.

MEASUREMENTS AND STANDARDS

Measurements have been provided in both metres and [feet-inches]. Ensure to follow standards noted for the location in which this play equipment is being installed. Those marked CSA are to be used in Canada and those marked ASTM to be used in the United States.

LIST OF ABBREVIATIONS

AYC = Alaskan Yellow Cedar
WRC = Western Red Cedar
DPS = Designated Play Surface
SS = Stainless Steel
HDG = Hot Dipped Galvanized
WWM = Welded Wire Mesh
TYP = Typical
C/W = Complete With
UNO = Unless Noted Otherwise
EWF = Engineered Wood Fiber
PIP = Poured-In-Place Rubber Surfacing
PT = Pressure Treated

TOOLS SUPPLIED WITH THIS PRODUCT

- None

TOOLS THE INSTALLER NEEDS TO SUPPLY

- T25 drive bit
- T40 drive bit
- High Torque Drill
- Wood drill bit set up to and including 1/2"
- 1/2" impact driver
- Socket Set up to and including 1-1/8"
- Hammer drill
- Concrete drill bit set up to and including size required by epoxy manufacturer to set 3/4" threaded rod 8" deep in concrete pad
- Angle grinder (with course 24 grit sanding disks and metal cut off disks)
- Transit or Laser Level
- Rigging and lifting straps

EQUIPMENT THE INSTALLER NEEDS TO SUPPLY

Machine to lift and position heaviest element.

- Pre-assembled 2 Level Tower 5,500 LBS lbs

INSTALLER CREW AND TIME REQUIRED

Number of people needed: 3
Typical total person-hours to install: 80 + concrete cure time

Time breakdown:

- 8 hours x 3 people for excavation and pouring concrete
- Time for concrete cure
- 16 hours x 3 people for onsite fabrication and play equipment installation
- 4 hours x 2 people for onsite Enclosed Bridge installation

MATERIALS THE INSTALLER NEEDS TO SUPPLY

- Threadmate threadlocker Vibra-Tite VC-3 (or equal)
- Epoxy - Simpson Strong Tie "Set 3G" or Hilti "Hy-200"
- Concrete - as specified in details

WARNINGS

These instructions do not provide specific guidance on the use of tools or the lifting and moving heavy objects. It is assumed that competent people are installing this product who are familiar with using the tools and equipment required and are knowledgeable and skilled at lifting and positioning heavy objects.

PROPERTY OF EARTHSCAPE PLAY INC. - DO NOT COPY. DO NOT DISTRIBUTE.

MAKE SURE YOU HAVE ALL THE PARTS

Examine the equipment and ensure you have all the required parts listed in the table below.

See "As Shipped Page" to understand orientation of product as delivered to site.

PART IMAGE	ITEM NO.	PART NO.	DESCRIPTION	QTY.
SEE IMAGE NEXT SHEET	1	1209039*	MODIFIED WOODEN BRIDGE 12'	1
SEE IMAGE THIS SHEET	2	F00185	1 LEVEL TIMBER TOWER	
NO IMAGE PROVIDED	3	F00227	CLIMBING HOLDS (PRE-INSTALLED)	1
SEE IMAGE NEXT SHEET	4	F00228*	CLADDED LADDER	1
SEE IMAGE THIS SHEET	5	F00302*	FILE POLE - SURFACE MOUNT 6' PLATFORM	1
SEE IMAGE THIS SHEET	6	F00308*	PLASTIC OPEN SLIDE - IN GROUND 6' - VEER LEFT	1
SEE IMAGE NEXT SHEET	7	F00316*	PLASTIC TUBE SLIDE - FLANGE 12' - TURN RIGHT	1
SEE IMAGE NEXT SHEET	8	F00363*	WOODEN BRIDGE 10'	1
SEE IMAGE NEXT SHEET	9	F00403*	SLING SEATS - PIP	1
SEE IMAGE THIS SHEET	10	F00405*	ACCESS CLIMBING NET - PIP	1
SEE IMAGE NEXT SHEET	11	F00407	2 LEVEL TIMBER TOWER	1
	12	H20019	THREADED STUD 3/4"-10 X 12" SS	32
	13	H30047V	WASHER 3/4" X 1-3/4" SS	32
	14	H40015	HEX NUT 3/4-10 SS	64

IMAGES OF FASTENERS IN THIS TABLE ARE REPRESENTATIONAL TO HELP IDENTIFY PARTS.

*THESE ASSEMBLIES INCLUDE ADDITIONAL HARDWARE. REVIEW THE SEPARATE INSTALLATION PACKAGES THAT CORRESPOND TO EACH ADD-ON FOR MORE INFORMATION.

F00405
ACCESS CLIMBING NET - PIP
SHIPS IN PIECES
SEE SEPARATE INSTALLATION PACKAGE FOR ADDITIONAL DETAILS

F00302
FIRE POLE - SURFACE MOUNT 6' PLATFORM
SHIPS IN PIECES
SEE SEPARATE INSTALLATION PACKAGE FOR ADDITIONAL DETAILS

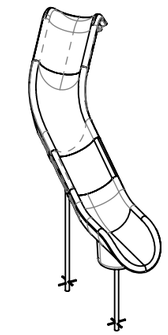

F00308
PLASTIC OPEN SLIDE - IN GROUND 6' - VEER LEFT
SHIPS IN PIECES
SEE SEPARATE INSTALLATION PACKAGE FOR ADDITIONAL DETAILS

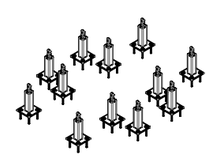

F00403
SLING SEATS - PIP
SHIPS IN PIECES
SEE SEPARATE INSTALLATION PACKAGE FOR ADDITIONAL DETAILS

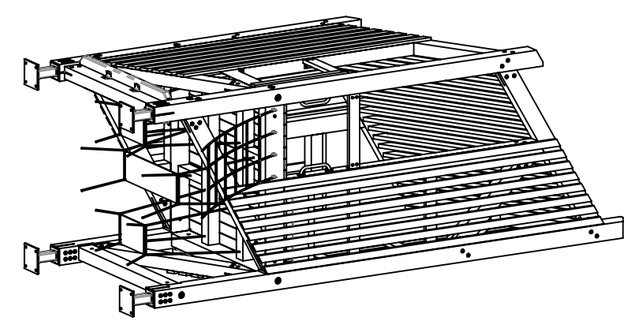

F00185
1 LEVEL TIMBER TOWER
SHIPS COMPLETE AS ILLUSTRATED
INSTALL DETAILS THIS PACKAGE

PROPERTY OF EARTHSCAPE PLAY INC. - DO NOT COPY. DO NOT DISTRIBUTE.

SUPPLIED PARTS (2 OF 2)

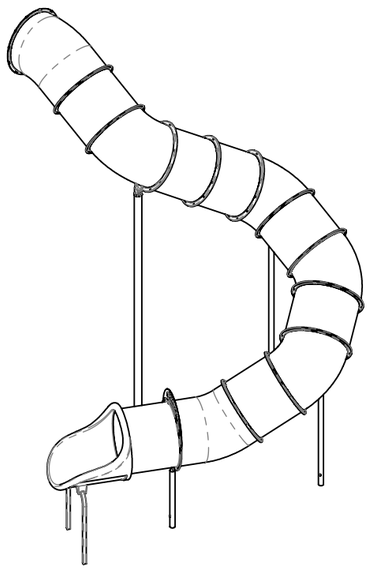

F00316
PLASTIC TUBE SLIDE - FLANGE
12' - TURN RIGHT
SHIPS IN PIECES
SEE SEPARATE INSTALLATION PACKAGE FOR
ADDITIONAL DETAILS

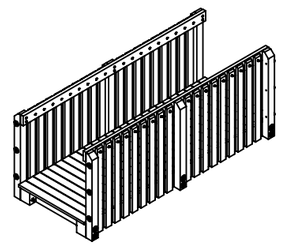

F00363
WOODEN BRIDGE 10'
SHIPS COMPLETE AS ILLUSTRATED
SEE SEPARATE INSTALLATION PACKAGE
FOR ADDITIONAL DETAILS

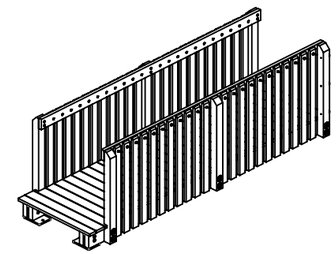

1209039
MODIFIED WOODEN BRIDGE 12'
SHIPS COMPLETE AS ILLUSTRATED
SEE SEPARATE INSTALLATION PACKAGE
FOR ADDITIONAL DETAILS

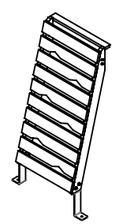

F00228
CLADDED LADDER
SHIPS COMPLETE AS ILLUSTRATED
SEE SEPARATE INSTALLATION PACKAGE FOR
ADDITIONAL DETAILS

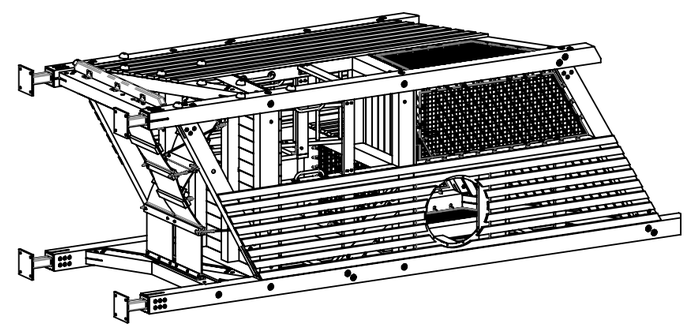

F00407
2 LEVEL TIMBER TOWER
SHIPS COMPLETE AS ILLUSTRATED
INSTALL DETAILS THIS PACKAGE

PROPERTY OF EARTHSCAPE PLAY INC. - DO NOT COPY. DO NOT DISTRIBUTE.

TOWER AS SHIPPED - 1 LEVEL TIMBER TOWER

COMBINED ASSEMBLY

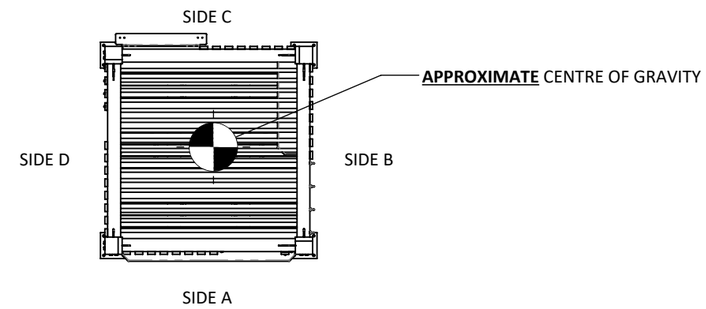

PLAN VIEW

PRE-ASSEMBLED TOWER AS SHIPPED
WEIGHS APPROXIMATELY:
4,350 LBS

DIMENSION TO
LIMITS OF POST
BASE BRACKETS

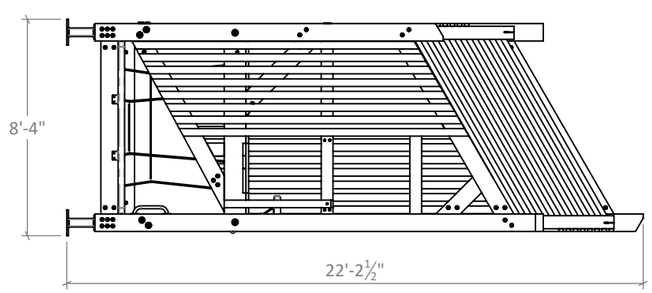

ORIENTATION ON TRUCK

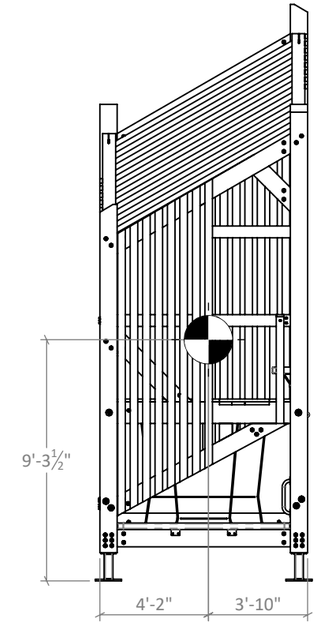

SIDE A ELEVATION

DIMENSIONS FROM OUTSIDE
FACE OF CORNER POSTS

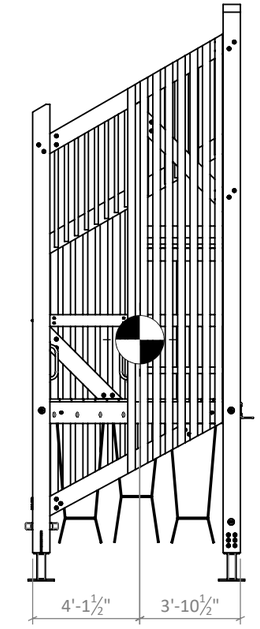

SIDE B ELEVATION

CENTRE OF GRAVITY

PROPERTY OF EARTHSCAPE PLAY INC. - DO NOT COPY. DO NOT DISTRIBUTE.

TOWER AS SHIPPED - 2 LEVEL TIMBER TOWER

COMBINED ASSEMBLY

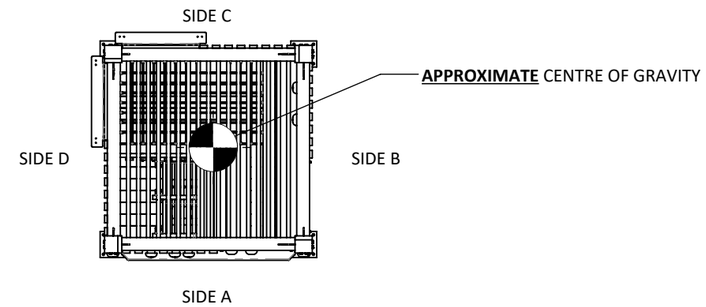

PLAN VIEW

PRE-ASSEMBLED TOWER AS SHIPPED
WEIGHS APPROXIMATELY:
5,500 LBS

DIMENSION TO
LIMITS OF POST
BASE BRACKETS

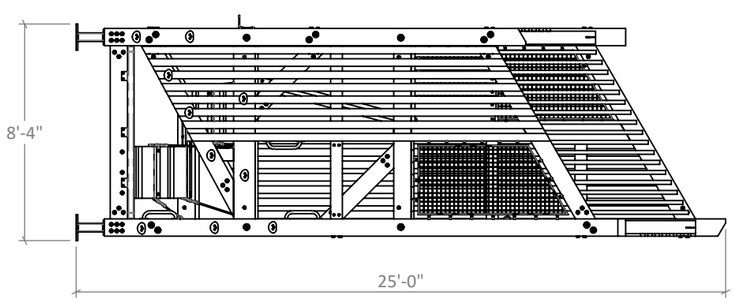

ORIENTATION ON TRUCK

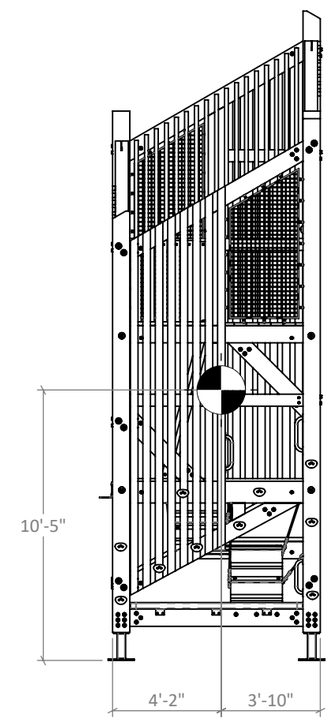

SIDE A ELEVATION

DIMENSIONS FROM OUTSIDE
FACE OF CORNER POSTS

CENTRE OF GRAVITY

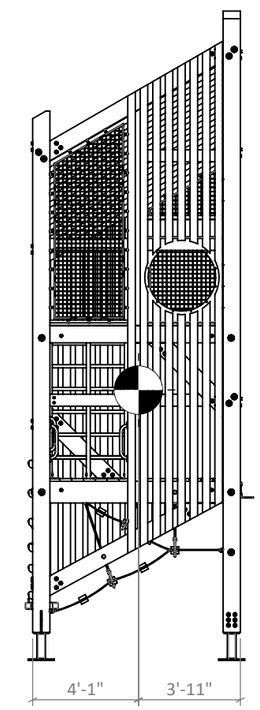

SIDE B ELEVATION

PROPERTY OF EARTHSCAPE PLAY INC. - DO NOT COPY. DO NOT DISTRIBUTE.

FINISHED PRODUCT - FRONT ISOMETRIC

WHAT THE FINISHED PRODUCT LOOKS LIKE

All concrete pads and play surfacing to be supplied by the installer.

Finished play surface is assumed to be level. Installation sites with sloped surfacing may not work with the supplied equipment. If the play surface is sloped contact your Earthscape Representative for assistance before proceeding.

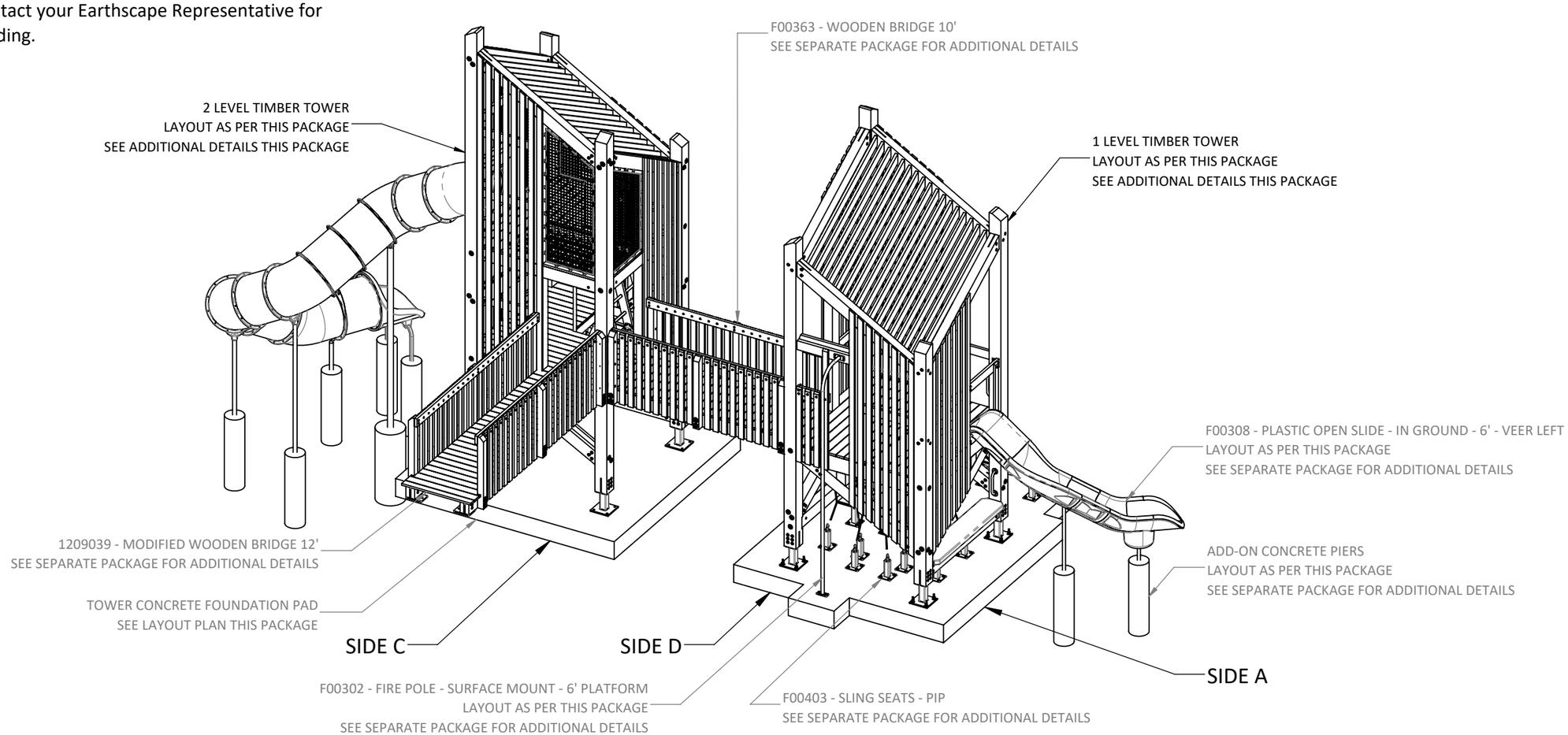

FRONT ISOMETRIC VIEW

PROPERTY OF EARTHSCAPE PLAY INC. - DO NOT COPY. DO NOT DISTRIBUTE.

FINISHED PRODUCT - REAR ISOMETRIC

WHAT THE FINISHED PRODUCT LOOKS LIKE

See note on the Finished Product - Front Isometric Sheet

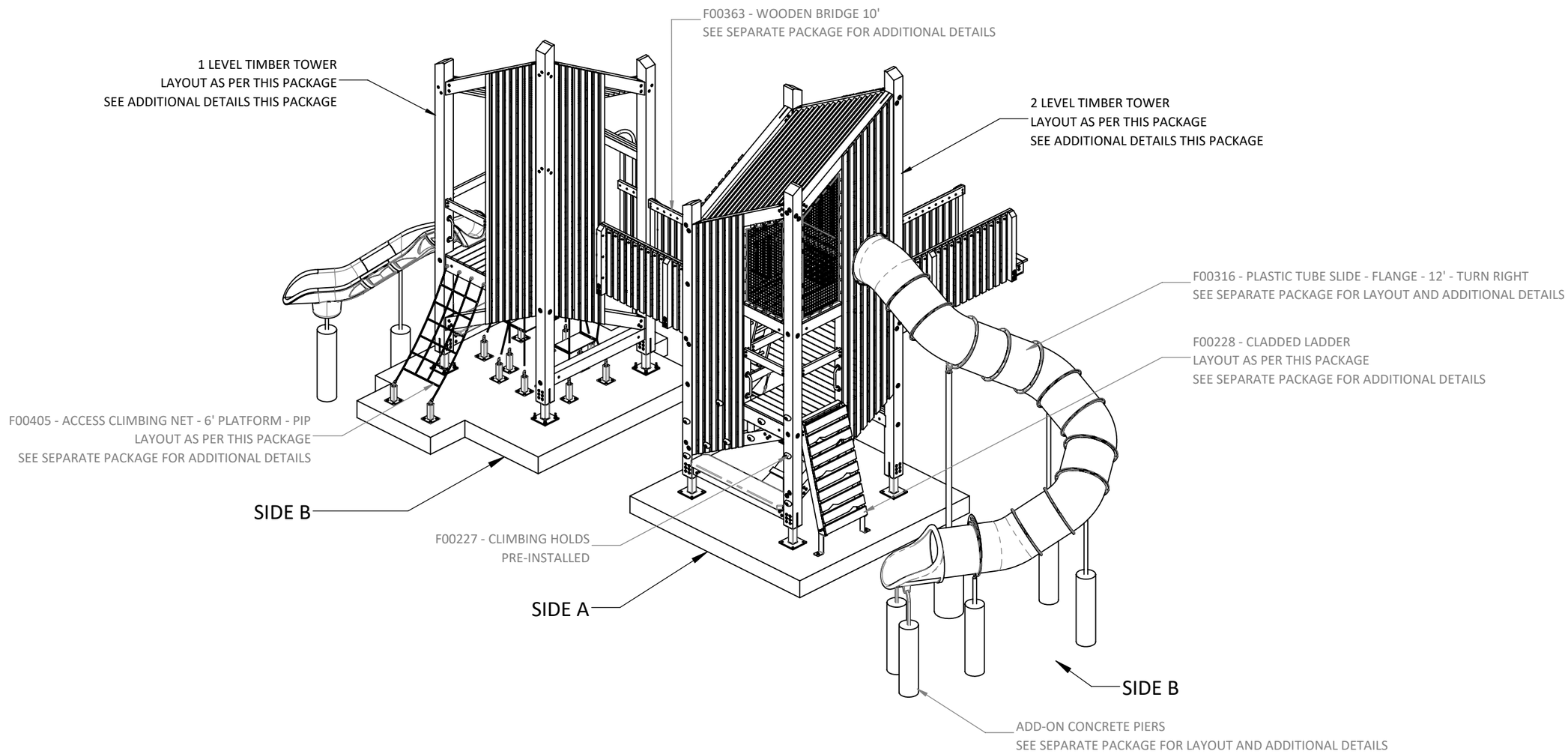

PROPERTY OF EARTHSCAPE PLAY INC. - DO NOT COPY. DO NOT DISTRIBUTE.

FINISHED PRODUCT - 1 LEVEL TIMBER TOWER

WHAT THE FINISHED PRODUCT LOOKS LIKE

See note on the Finished Product - Front Isometric Sheet

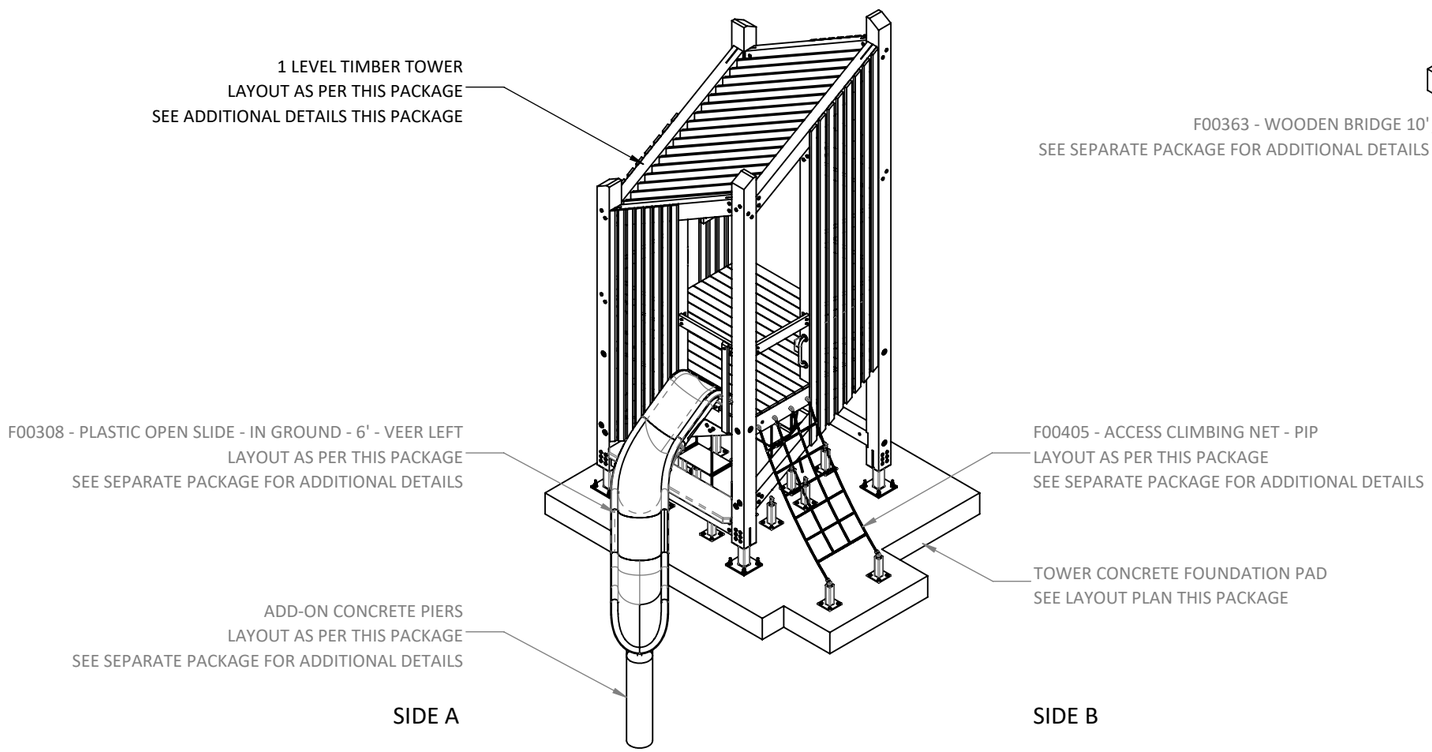

FRONT ISOMETRIC VIEW

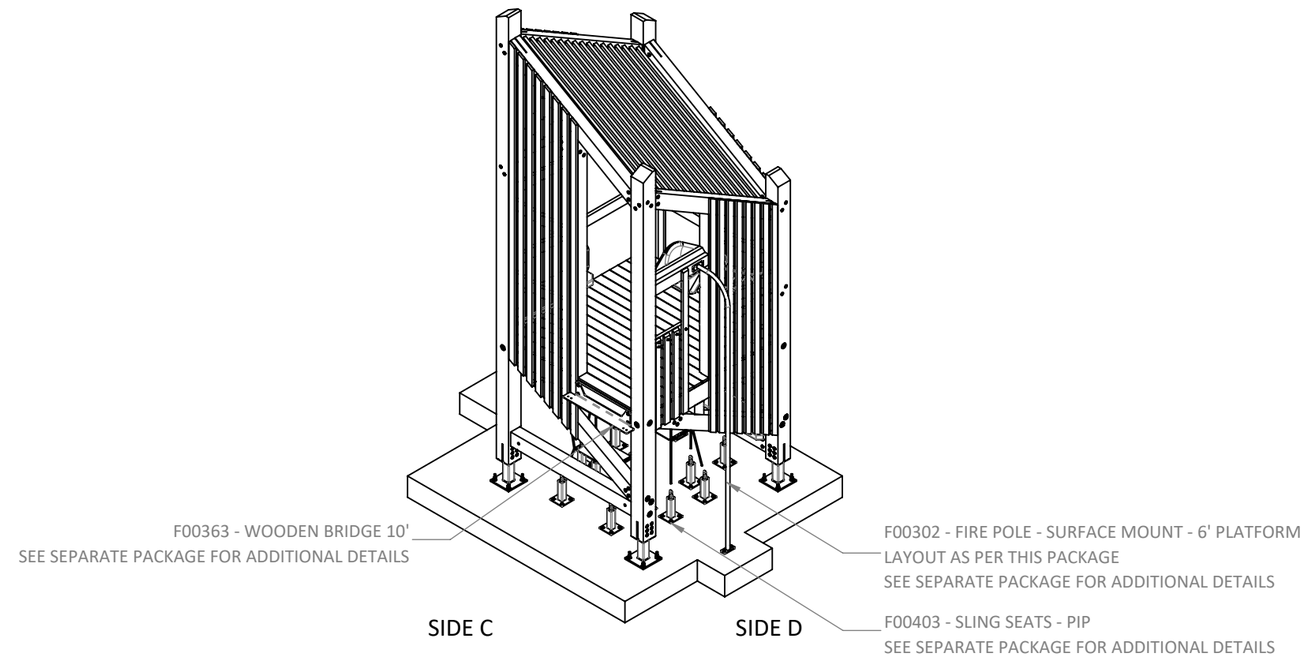

FRONT ISOMETRIC VIEW

PROPERTY OF EARTHSCAPE PLAY INC. - DO NOT COPY. DO NOT DISTRIBUTE.

FINISHED PRODUCT - 2 LEVEL TIMBER TOWER

WHAT THE FINISHED PRODUCT LOOKS LIKE

See note on the Finished Product - Front Isometric Sheet

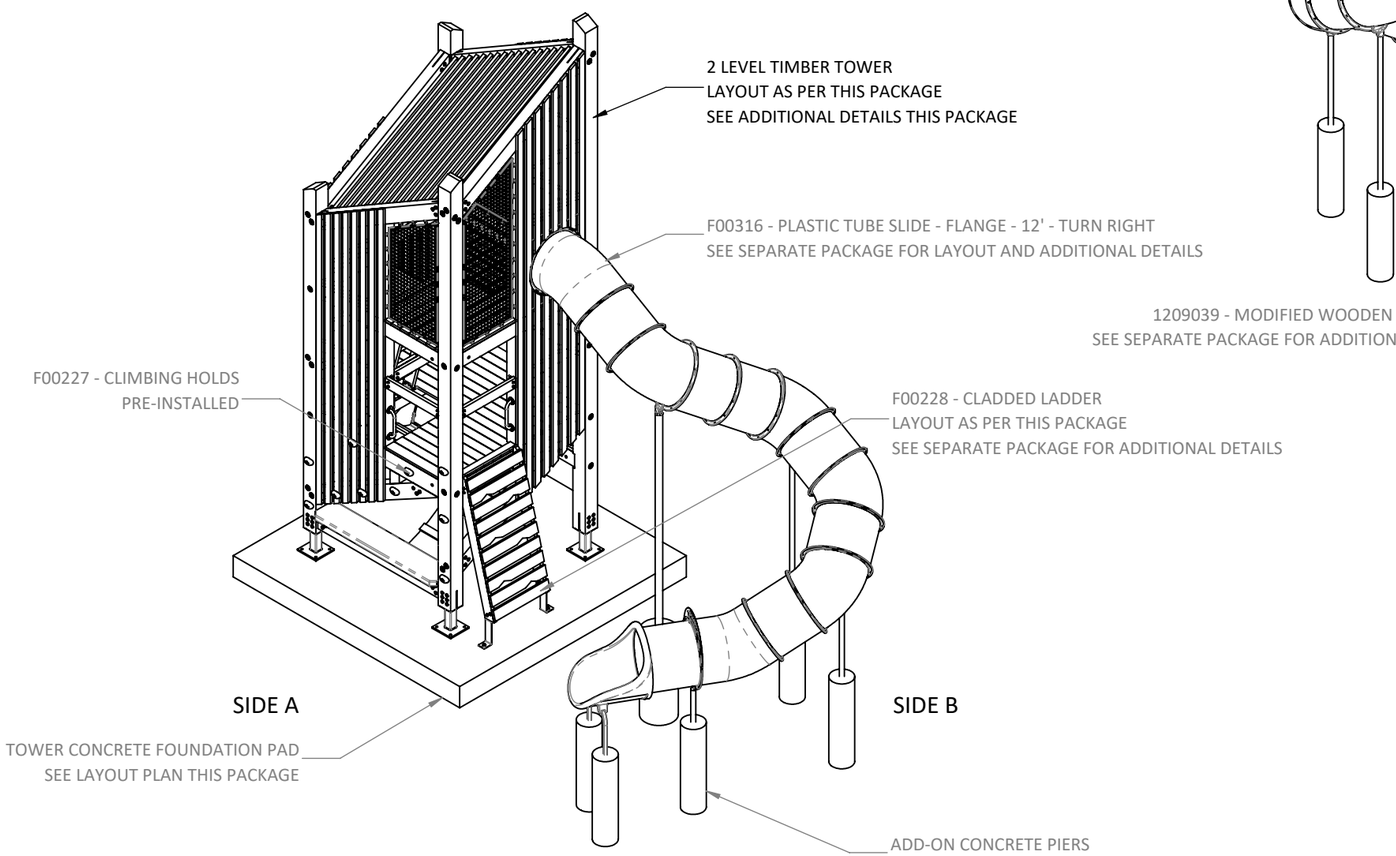

FRONT ISOMETRIC VIEW

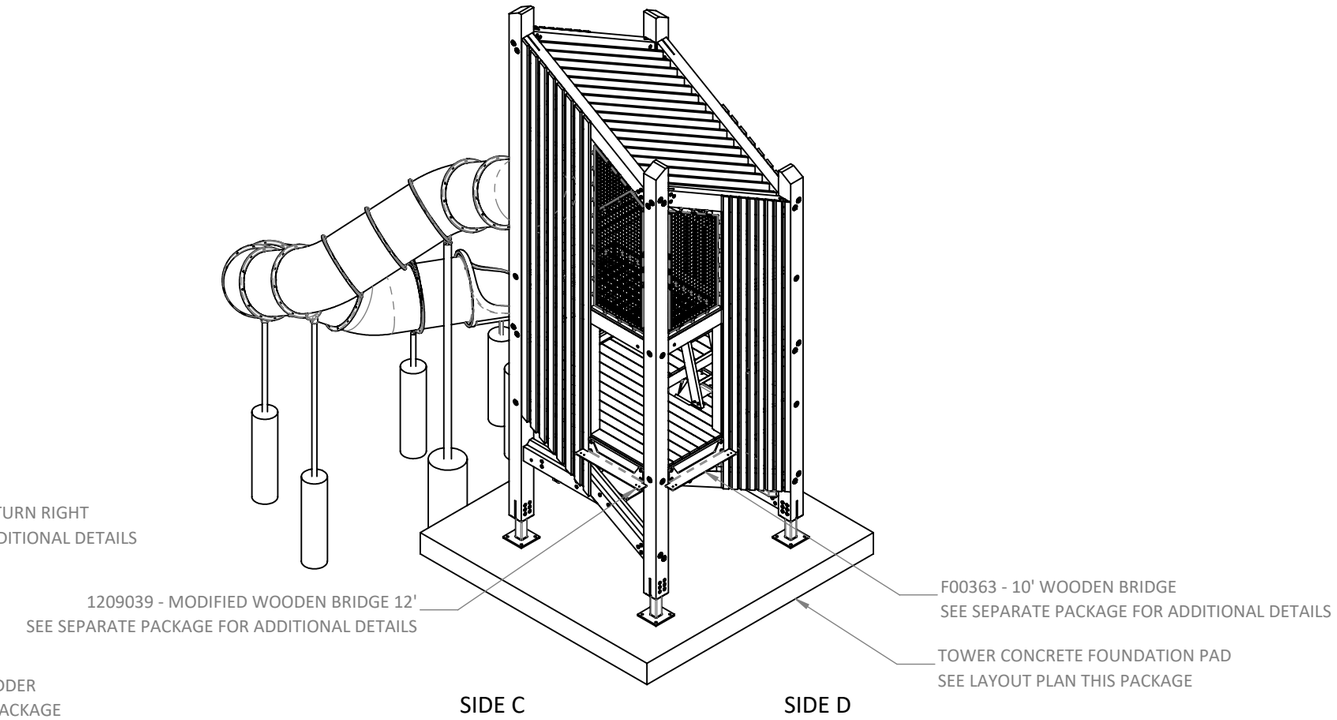

FRONT ISOMETRIC VIEW

PROPERTY OF EARTHSCAPE PLAY INC. - DO NOT COPY. DO NOT DISTRIBUTE.

FINISHED PRODUCT - PLAN VIEW

REAR

WHAT THE FINISHED PRODUCT LOOKS LIKE

See note on the Finished Product - Front Isometric sheet

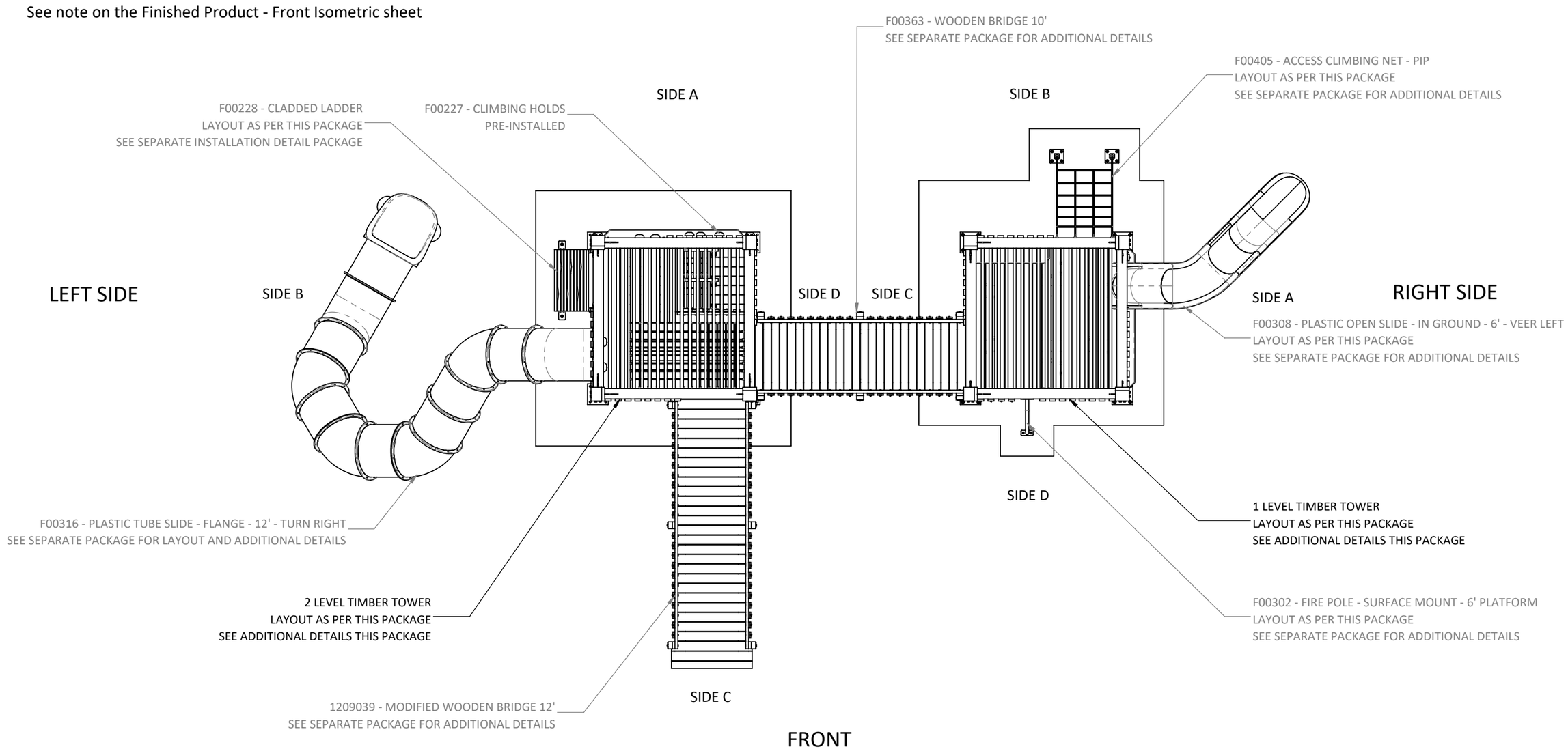

FRONT

PROPERTY OF EARTHSCAPE PLAY INC. - DO NOT COPY. DO NOT DISTRIBUTE.

WHAT THE FINISHED PRODUCT LOOKS LIKE

See note on the Finished Product - Front Isometric sheet

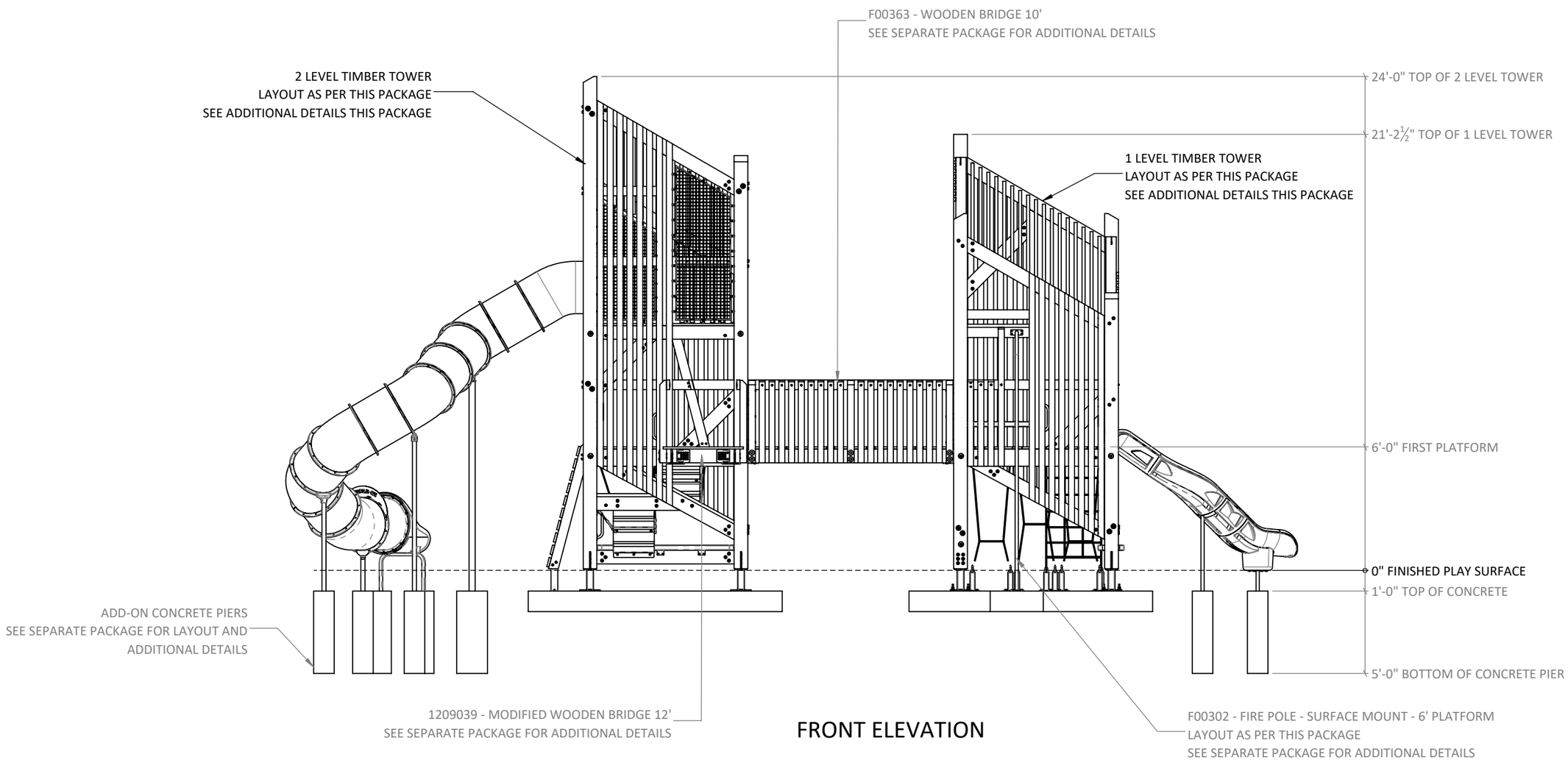

FRONT ELEVATION

PROPERTY OF EARTHSCAPE PLAY INC. - DO NOT COPY. DO NOT DISTRIBUTE.

FINISHED PRODUCT - ELEVATIONS 2 OF 4

WHAT THE FINISHED PRODUCT LOOKS LIKE

See note on the Finished Product - Front Isometric sheet

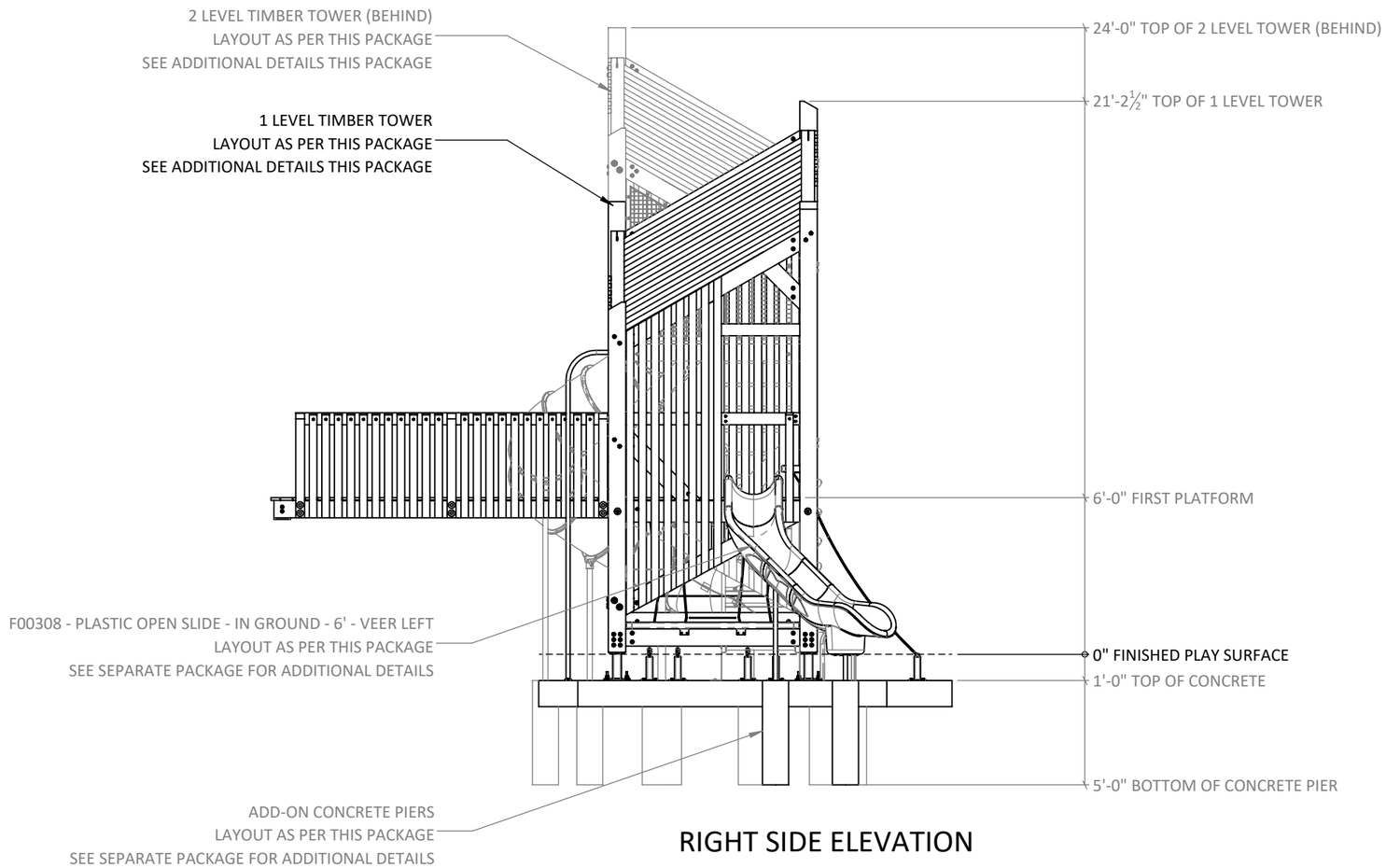

RIGHT SIDE ELEVATION

PROPERTY OF EARTHSCAPE PLAY INC. - DO NOT COPY. DO NOT DISTRIBUTE.

WHAT THE FINISHED PRODUCT LOOKS LIKE

See note on the Finished Product - Front Isometric sheet

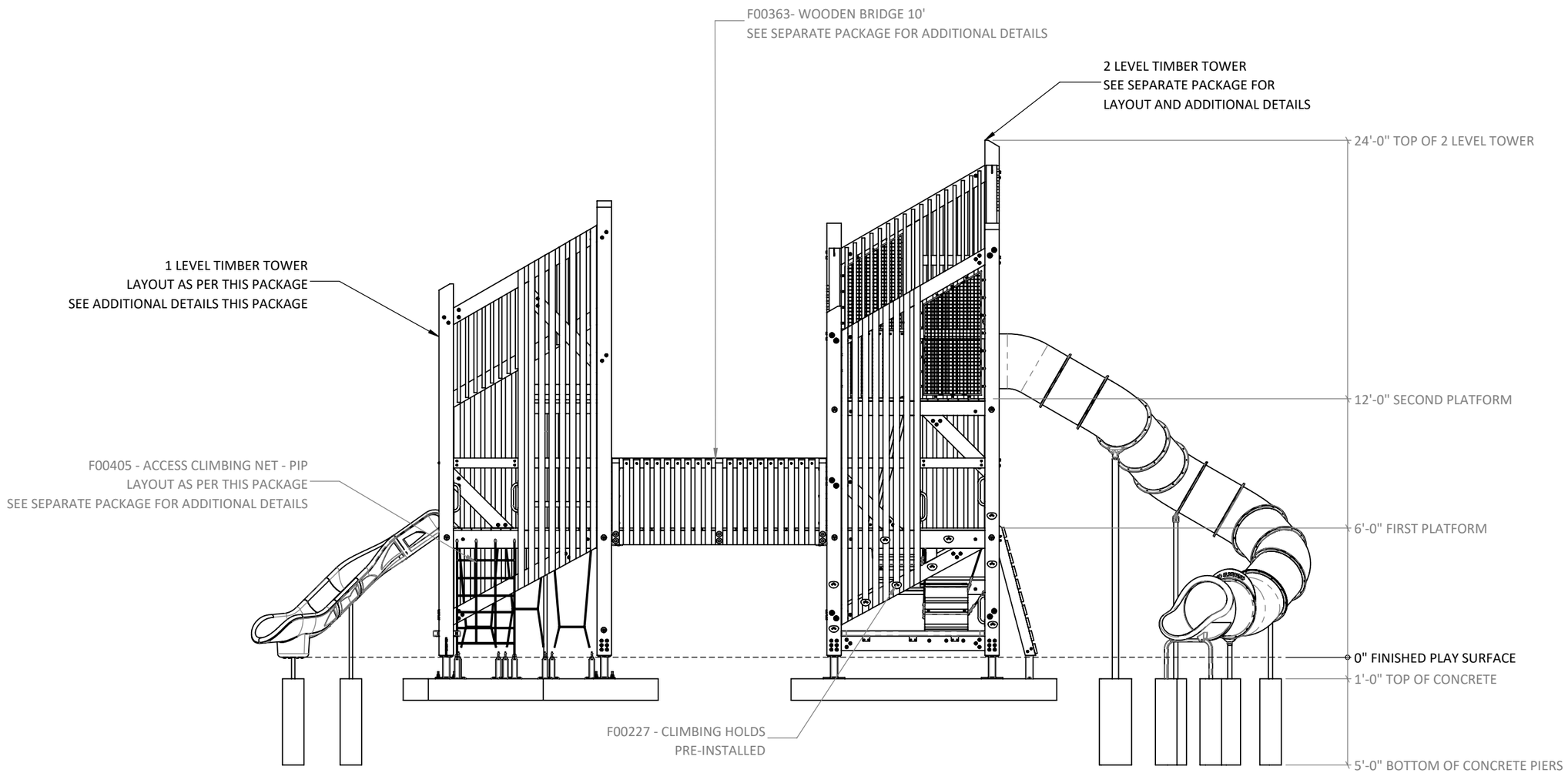

REAR ELEVATION

PROPERTY OF EARTHSCAPE PLAY INC. - DO NOT COPY. DO NOT DISTRIBUTE.

FINISHED PRODUCT - ELEVATIONS 4 OF 4

WHAT THE FINISHED PRODUCT LOOKS LIKE

See note on the Finished Product - Isometrics sheet

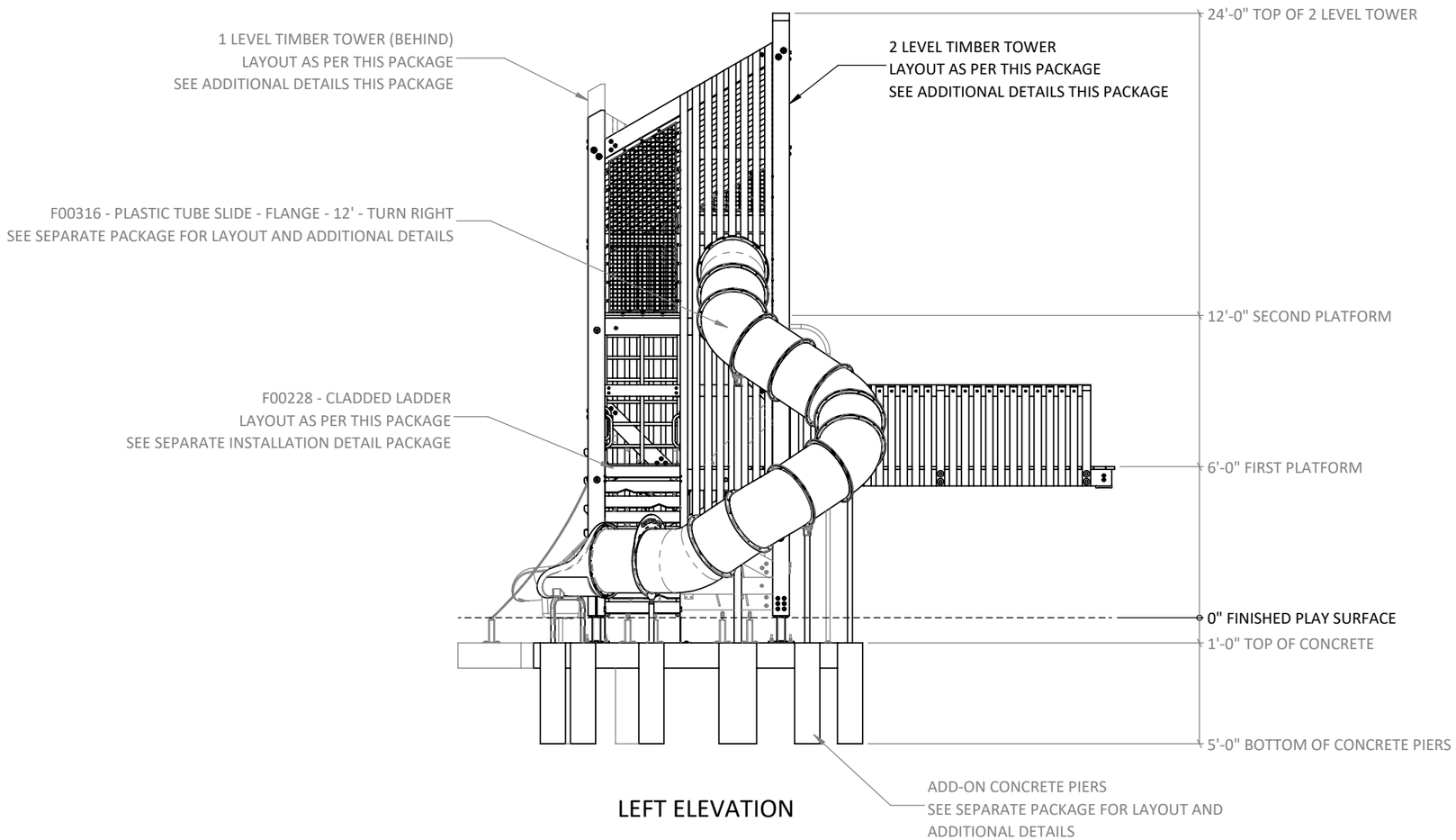

LEFT ELEVATION

PROPERTY OF EARTHSCAPE PLAY INC. - DO NOT COPY. DO NOT DISTRIBUTE.

LOCATE PLAY EQUIPMENT AND POUR TOWER PAD

STEP 1 - LOCATING THE EQUIPMENT ON SITE

Layout and mark the location of the equipment Reference Points (R.P.) on your site. Reference Points are taken from the outside corners of the tower base brackets. Refer to 1209039 - Modified Timber Bridge 12' to ensure the concrete is positioned with respect to the abutment for the bridge. The location of these points relative to the site is not within the scope of these instructions and should be provided by others.

Ensure you know what the designed elevation is for the finished safety surface. All heights provided in these instructions will be relative to the finished play surface. The finished surface elevation is not within the scope of these instructions and should be provided by others.

STEP 2 - LAYOUT CONCRETE PAD

Layout and mark the outer edge of concrete pad based off the Reference Points. Refer to Foundation Plan this sheet for details

Top of concrete is 305mm [12"] below finished play surface.

STEP 3 - EXCAVATE FOR CONCRETE PAD

Excavate area and prep as per Concrete Placement Detail SD-001B at the back of this package.

The foundation detail provided in these instructions has been developed assuming typical soil conditions specified in general notes. If the subgrade encountered does not meet these conditions, the subgrade must be improved or revisions made to this detail. Revisions to the detail are the responsibility of the installer and it is strongly recommended any changes be reviewed and approved by a registered engineer.

STEP 4 - POUR CONCRETE PAD

Form and pour timber tower concrete pads as per Foundation Plan this sheet and Concrete Placement Detail SD-001B on this sheet.

Allow concrete to cure prior to proceeding to Step 5.

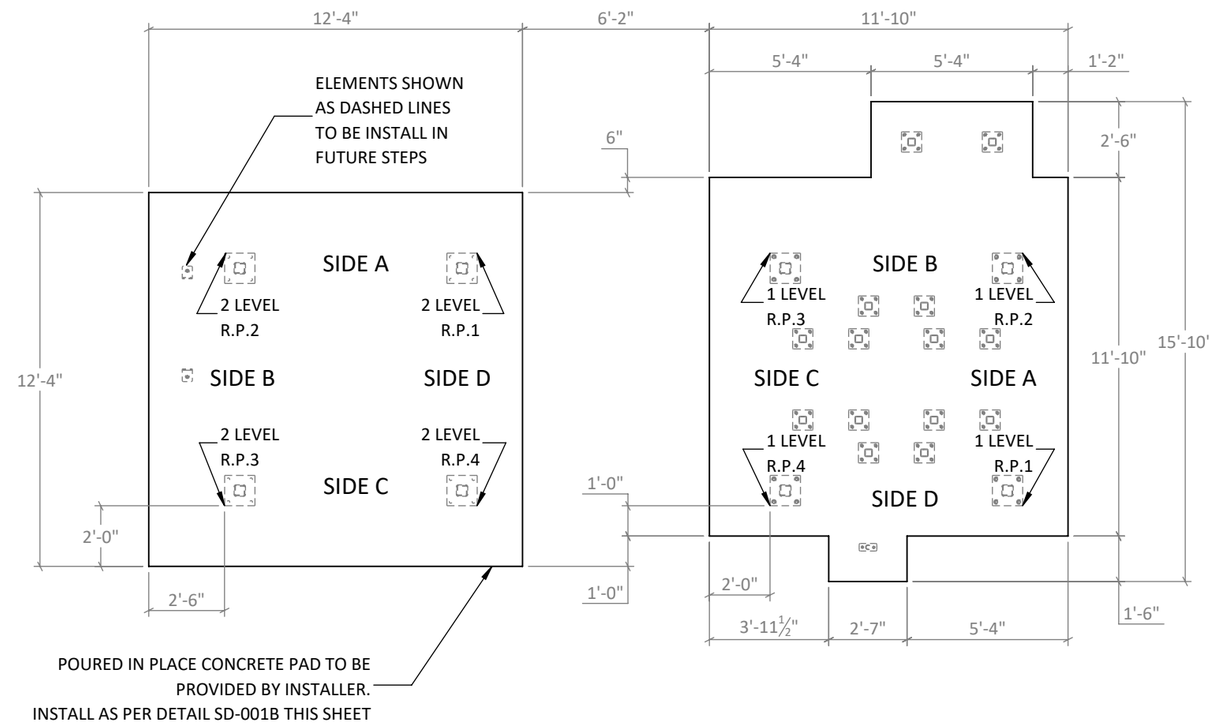

FOUNDATION PLAN

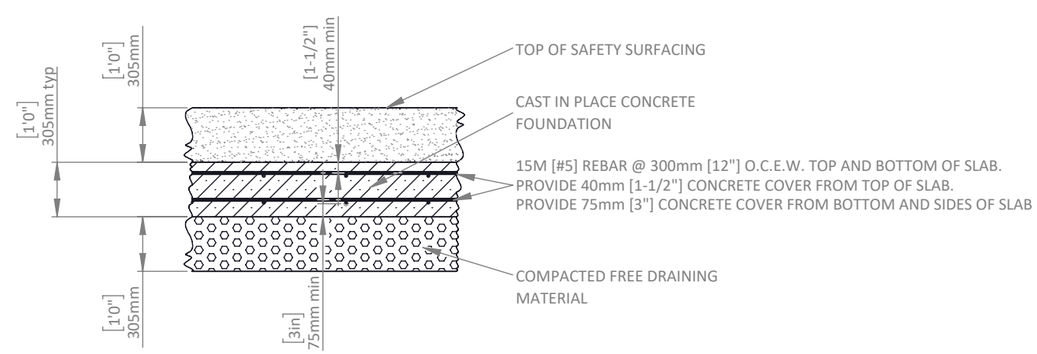

FOUNDATION NOTES:

1. TOP OF CONCRETE TO BE SET AT 300mm [12"] BELOW TOP OF SURFACING UNO.
2. SLAB TO BEAR ON MATERIAL BELOW THE FROST DEPTH, OR ALTERNATIVELY ON 300mm [12"] OF FREE DRAINING NON FROST SUSCEPTIBLE SOILS, COMPACTED TO 98% SPDD.

CONCRETE PLACEMENT DETAIL SD-001B

PROPERTY OF EARTHSCAPE PLAY INC. - DO NOT COPY. DO NOT DISTRIBUTE.

POSITION 2 LEVEL TIMBER TOWER

STEP 5 - POSITION TOWER

Layout and mark the location of the equipment Reference Points (R.P.) on the cured concrete pad as per this sheet.

Position the 2 Level Timber Tower on the foundation pad aligning it to the site reference points. Reference Points align with the outside corners of the tower base brackets. Refer to 1209039 - Modified Timber Bridge 12' to ensure the tower is centered with the concrete abutment for the bridge.

STEP 6 - INSTALL 12' MODIFIED WOODEN BRIDGE TO ABUTMENT

Install 1209039 - Modified Wooden Bridge 12' as per separate installation package. End of the bridge to secure to a concrete abutment provided by the installer

DO NOT ANCHOR TOWER TO THE FOUNDATION AT THIS TIME.

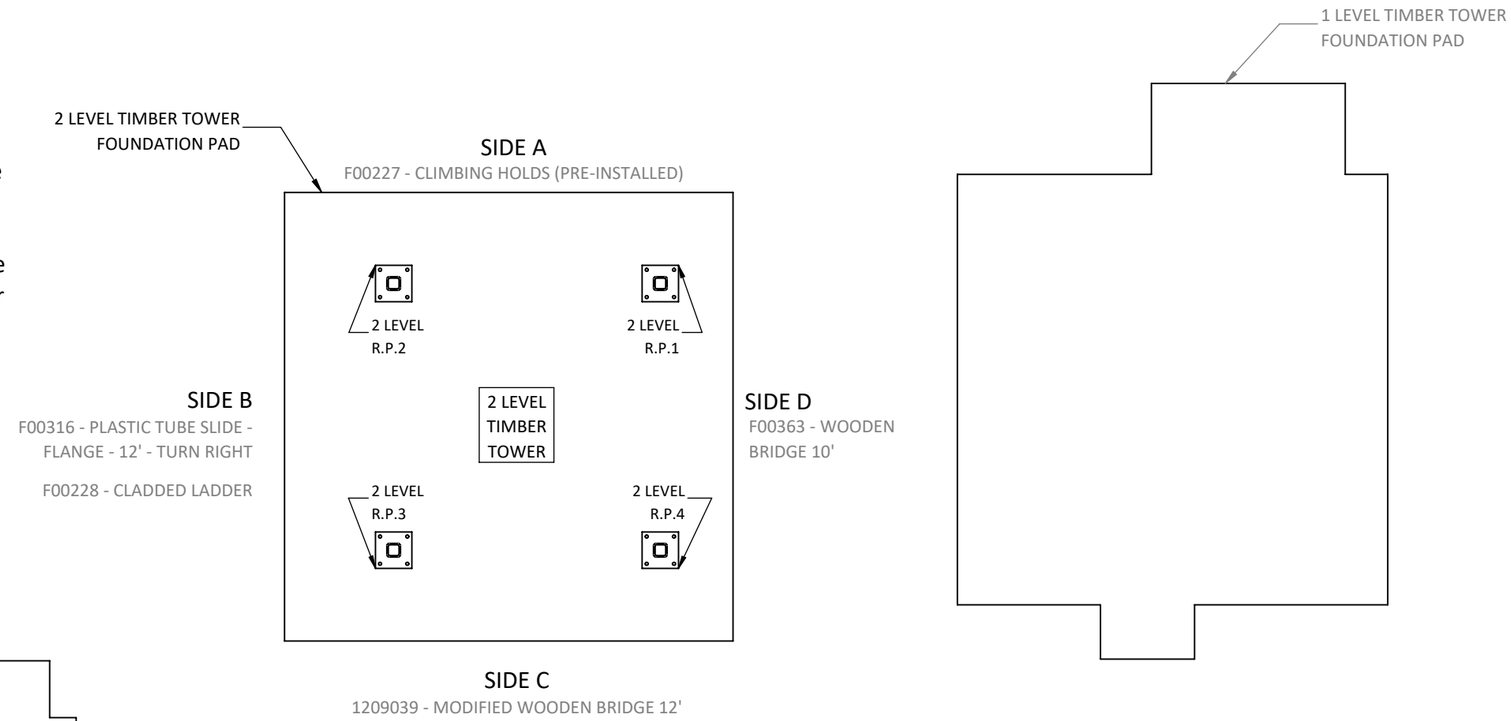

2 LEVEL TIMBER TOWER LAYOUT

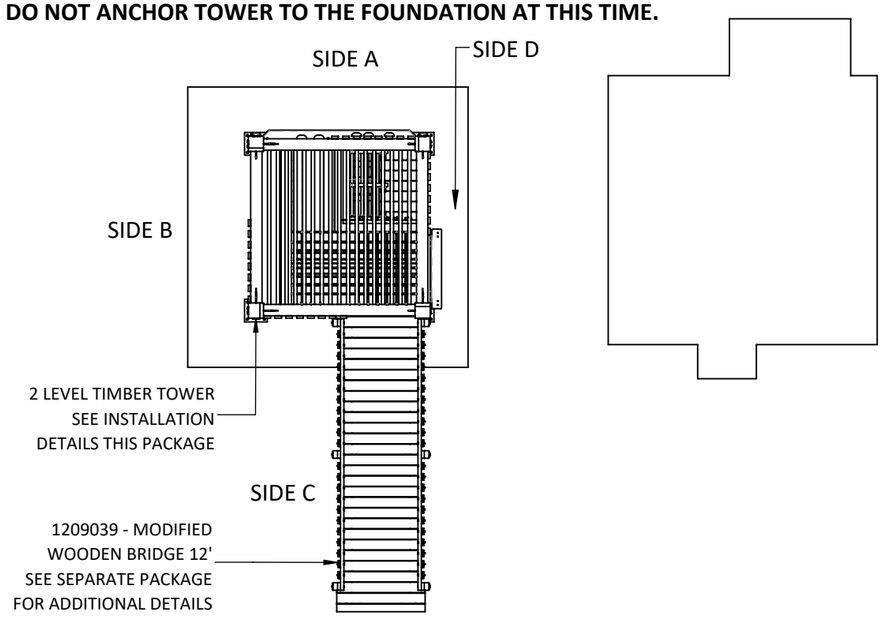

TOWER AT THE END OF STEP 6

PROPERTY OF EARTHSCAPE PLAY INC. - DO NOT COPY. DO NOT DISTRIBUTE.

STEP 7 - POSITION 1 LEVEL TOWER

Position the 1 Level Timber Tower on the foundation pad aligning it to the 2 Level Timber Tower as per the Layout this sheet.

STEP 8 - INSTALL 10' WOODEN BRIDGE

Install F00363 - Wooden Bridge 10' as per the separate installation package.

DO NOT ANCHOR TOWER TO THE FOUNDATION AT THIS TIME.

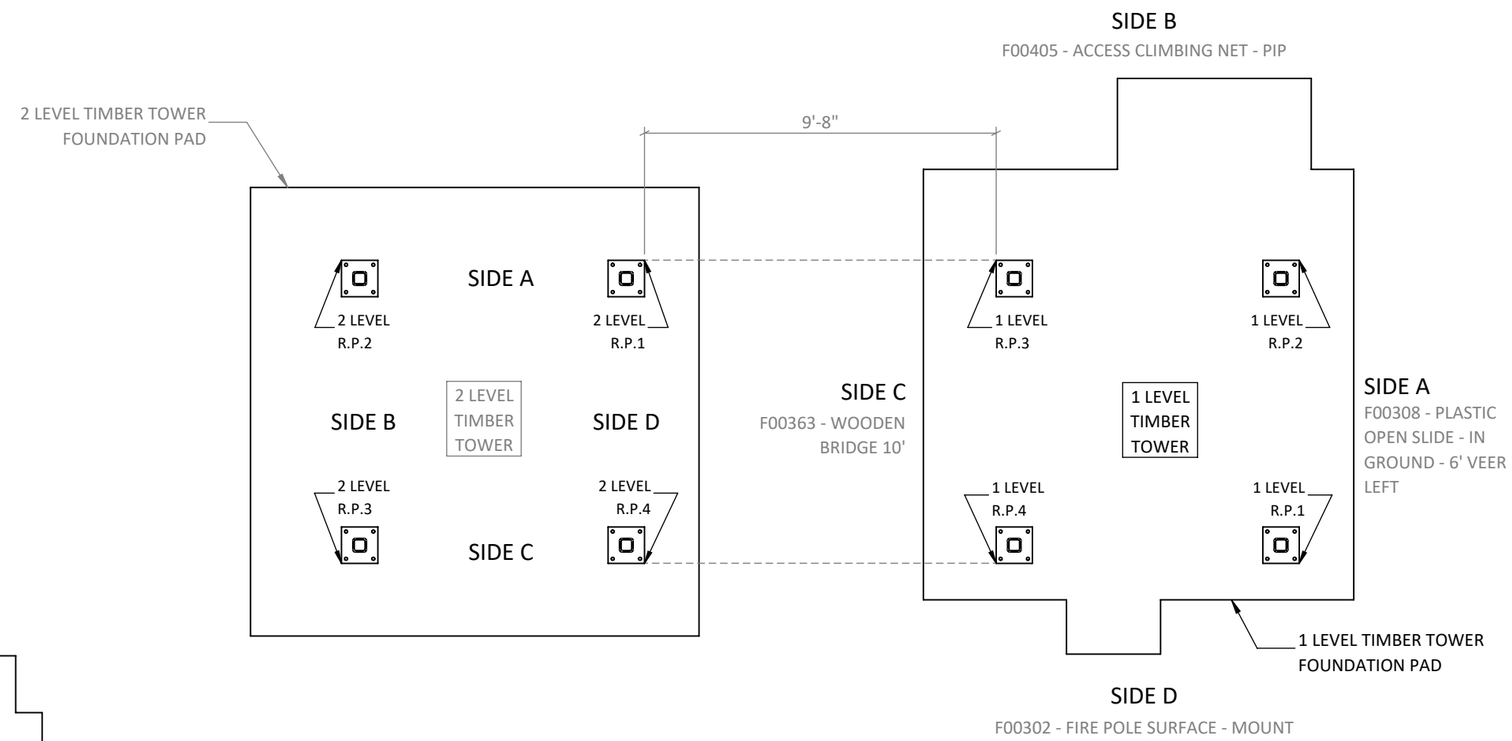

1 LEVEL TIMBER TOWER LAYOUT

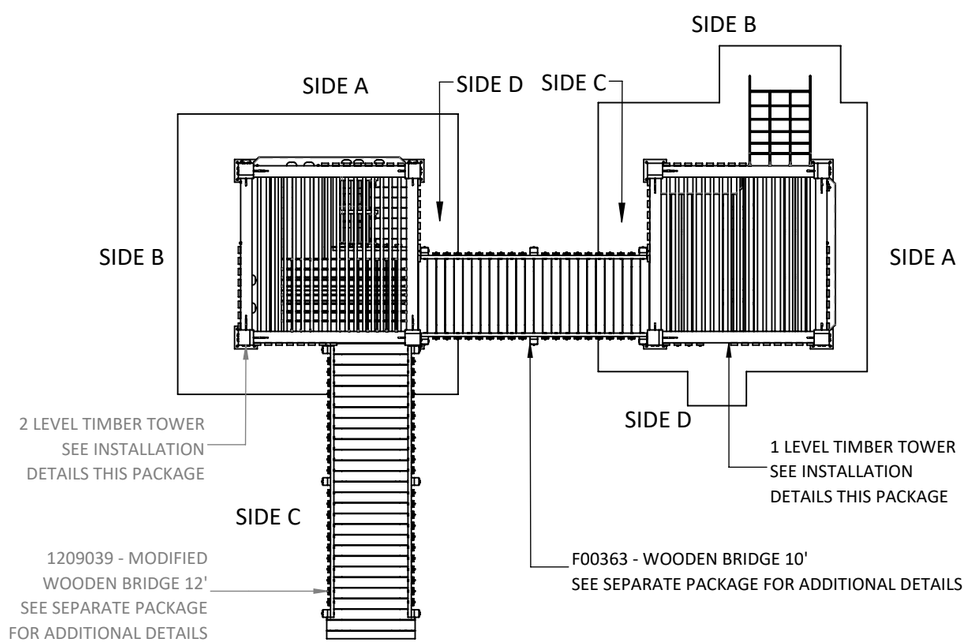

TOWER AT THE END OF STEP 8

PROPERTY OF EARTHSCAPE PLAY INC. - DO NOT COPY. DO NOT DISTRIBUTE.

STEP 9 - SECURE TOWERS TO FOUNDATION PAD

Secure both Timber Tower post base brackets to the concrete foundation pad as per SD-002B on this sheet.

Ensure excess threaded rod cut and ground after installation complete as noted on detail.

Anchoring of threaded rod with epoxy to be completed as per epoxy manufacturer's instructions.

MAINTAIN A MINIMUM ANCHOR ROD EDGE DISTANCE OF 100mm [4"].

HARDWARE REFERENCE LIST (PER CONNECTION)

ITEM NO.	PARTNO	DESCRIPTION	QTY.
1	H20019	Threaded Stud 3/4"-10 x 12" SS	4
2	H30047V	WASHER 3/4" X 1-3/4" SS	4
3	H40015	HEX NUT 3/4-10 SS	8

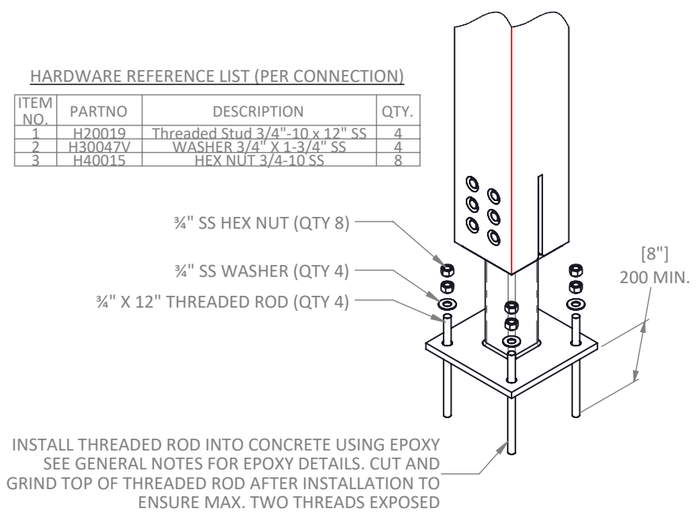

SD-002B

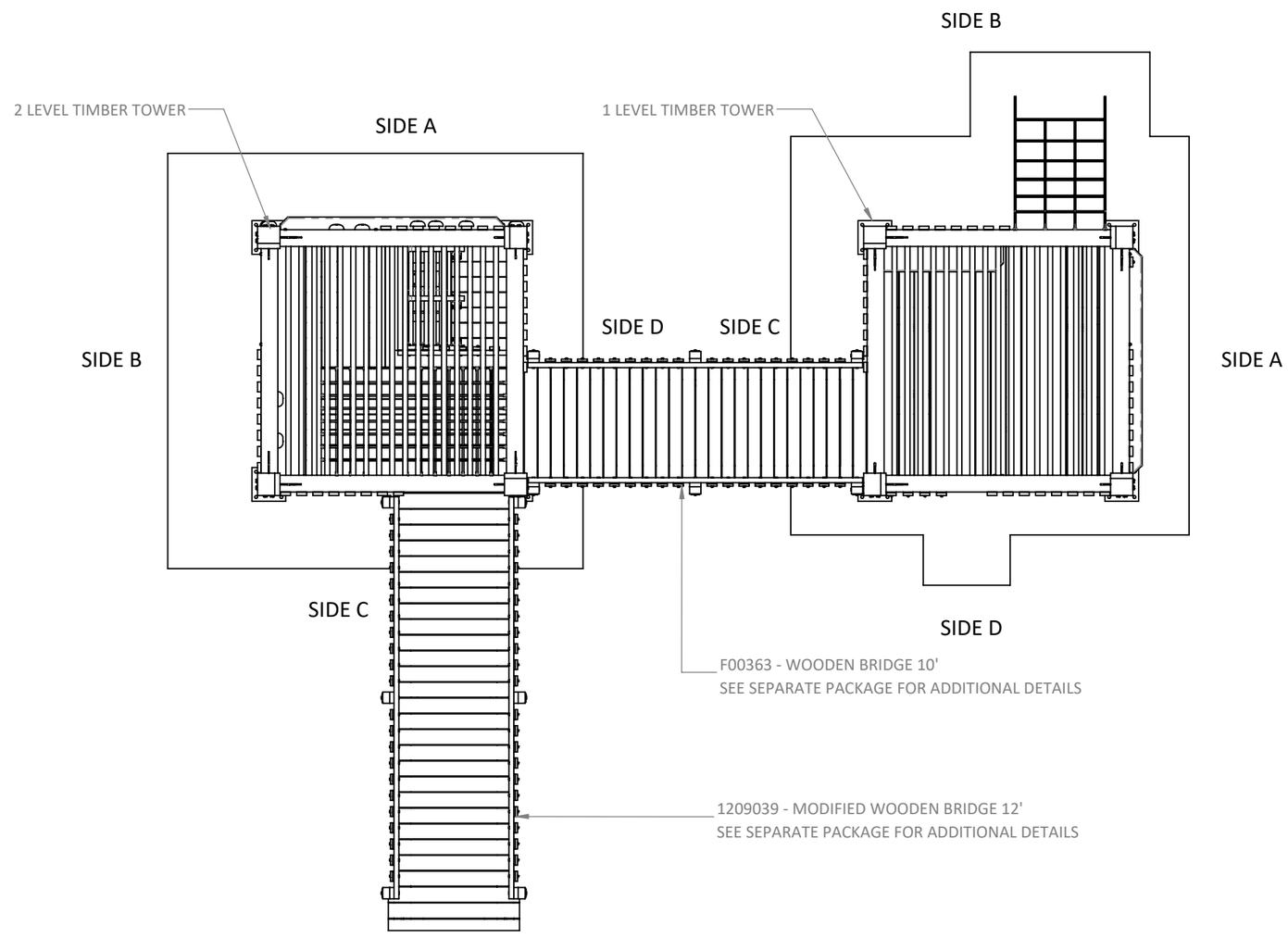

TOWER AT THE END OF STEP 9

PROPERTY OF EARTHSCAPE PLAY INC. - DO NOT COPY. DO NOT DISTRIBUTE.

STEP 10 - LOCATE AND INSTALL ADD-ONS

Refer to the layout drawing on this sheet to locate the add-ons relative to the timber towers.

Anchoring and other details relating to installation of the add-ons to be found in their separate installation packages.

1 LEVEL TIMBER TOWER ADD-ONS
F00302 - FILE POLE - SURFACE MOUNT - 6' PLATFORM
F00308 - PLASTIC OPEN SLIDE - IN GROUND - 6' - VEER LEFT
F00403 - SLING SEATS - PIP
F00405 - ACCESS CLIMBING NET - PIP

2 LEVEL TIMBER TOWER ADD-ONS
F00228 - CLADDED LADDER
F00316 - PLASTIC TUBE SLIDE - FLANGE - 12' - TURN RIGHT

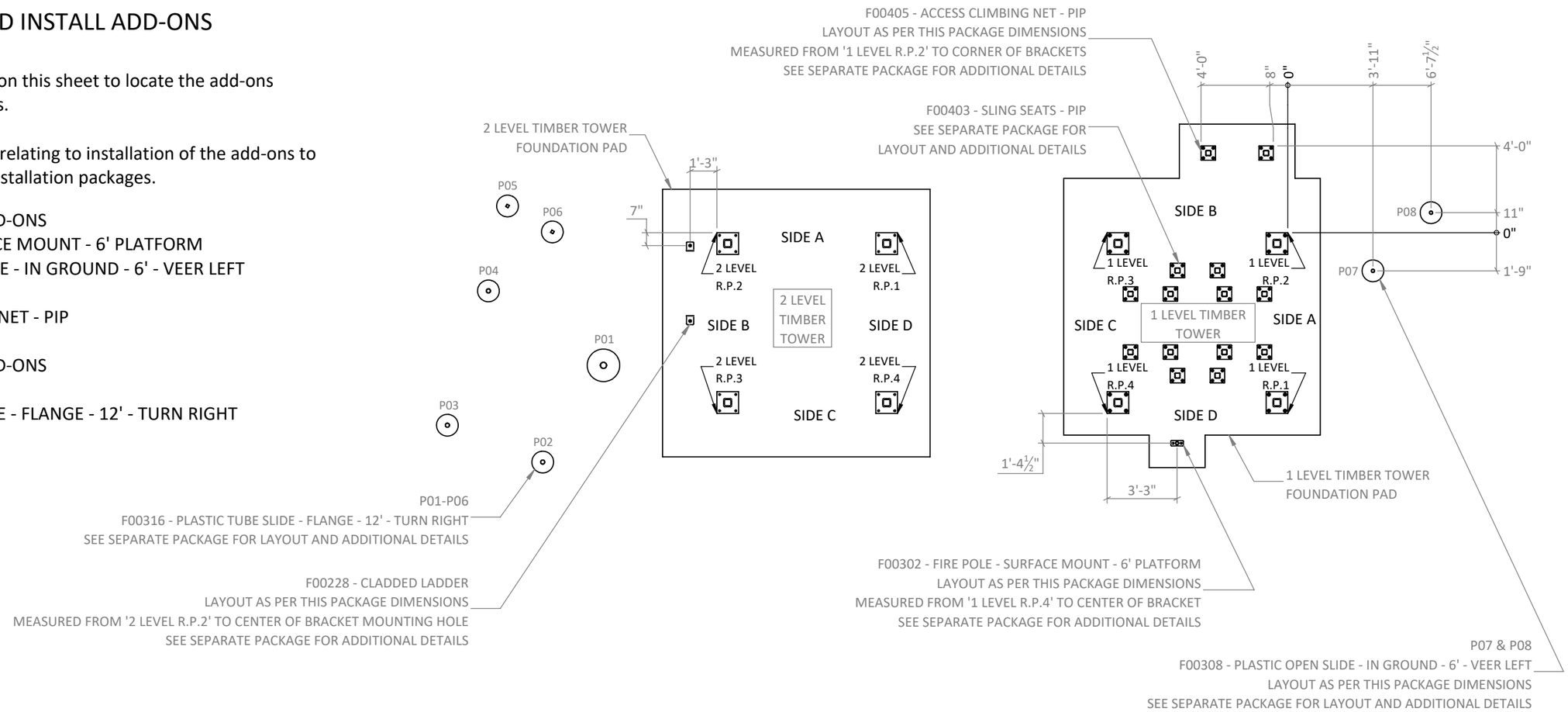

TOWER ADD-ON LAYOUT PLAN

PIER LAYOUT TABLE							
PIER I.D.	ADD-ON	PIER DIAMETER	PIER DEPTH	RAY FROM 1 LEVEL R.P.1	RAY FROM 1 LEVEL R.P.2	RAY FROM 1 LEVEL R.P.3	RAY FROM 1 LEVEL R.P.4
P07	F00308	∅1'-0"	5'-0"	7'-8"	4'-3½"	-	-
P08	F00308	∅1'-0"	5'-0"	11'-4½"	6'-8"	-	-

PROPERTY OF EARTHSCAPE PLAY INC. - DO NOT COPY. DO NOT DISTRIBUTE.

GENERAL NOTES

COMBINED ASSEMBLY

FOR CANADIAN INSTALLATION SITES USE THESE NOTES

GENERAL NOTES

1. THIS DRAWING IS THE PROPERTY OF EARTHSCAPE. DO NOT COPY OR DISTRIBUTE WITHOUT PERMISSION.
2. EARTHSCAPE RESERVES OWNERSHIP OF ALL DRAWINGS, SPECIFICATIONS, AND OTHER DOCUMENTS, INCLUDING THOSE IN ELECTRONIC FORM, AUTHORED BY EARTHSCAPE. UPON SIGNING CONTRACT, EARTHSCAPE GRANTS THE OWNER LIMITED LICENSE TO USE THE INSTRUMENTS OF SERVICE SOLELY FOR USING AND MAINTAINING, OR ADDING TO THE PROJECT
3. ENGINEERING AND STRUCTURAL REVIEW: EARTHSCAPE PROVIDES STAMPED DRAWINGS AND/OR STRUCTURAL LOAD TESTING FOR ONTARIO, AS REQUIRED BY CSA Z614. LOCAL ENGINEERING APPROVAL FOR JURISDICTIONS OUTSIDE ONTARIO, IF REQUIRED, TO BE PROVIDED BY OTHERS.
4. EARTHSCAPE DESIGNS AND ENGINEERS FOR A FROST PENETRATION DEPTH OF 1200mm. SLAB ON GRADE CONSTRUCTION IS SUBJECT TO FROST MOVEMENTS. FREE DRAINING SOIL UNDER THE FOOTING IS USED TO MINIMIZE FROST EFFECTS. OVERALL TOWER/SLAB MOVEMENT MAY OCCUR.
5. INSPECTION AND TESTING: INSPECTION, TESTING (INCLUDING CONCRETE TESTING), PRE-CONSTRUCTION SURVEYS TO BE COMPLETED BY OTHERS.
6. SURFACING: WHEN AN IMPACT-ABSORBING SURFACE MATERIAL IS REQUIRED, IT MUST COMPLY WITH CSA Z614 (MOST RECENT EDITION) FOR THE DEFINED FALL HEIGHT OF THE EQUIPMENT SPECIFIED IN DRAWINGS BY EARTHSCAPE OR A CONTRACTUALLY OBLIGATED CRITICAL HEIGHT SPECIFIED IN ADVANCE. ENSURE USE ZONES, SAFETY ZONES, AND/OR PROTECTIVE SURFACING ZONES AROUND ALL PLAY EQUIPMENT ARE COMPLIANT WITH CSA Z614 (MOST RECENT EDITION) - BY OTHERS.
7. SURVEY AND FACILITIES: SURVEY WORK INCLUDING BENCHMARKS, LINES AND LEVELS, PRE-CONSTRUCTION SURVEY, AS-BUILT DRAWINGS BY OTHERS
8. THESE DRAWINGS ARE INTENDED TO BE PRINTED AT 11" X 17" PAGE SIZE. DO NOT SCALE
9. ALL MEASUREMENTS ARE IN METRES (m) UNLESS OTHERWISE STATED
10. EQUIPMENT SHALL COMPLY WITH THE REQUIREMENTS OF CAN/CSA-Z614 (MOST RECENT EDITION) "CHILDREN'S PLAYSPACES AND EQUIPMENT"
11. VISUAL DETAILS INCLUDING BUT NOT LIMITED TO: NET SPACING, ROPE APPEARANCE AND COLOURS ARE FOR CONCEPTUAL PURPOSES ONLY
12. ALWAYS WEAR PROPER PPE AND FOLLOW SAFE PRACTICES.
13. ALL WORK SHALL BE COMPLETED IN ACCORDANCE WITH THE OCCUPATIONAL HEALTH AND SAFETY ACT.
14. CONTRACTOR IS RESPONSIBLE FOR CONFIRMING ALL SITE CONDITIONS AND REPORTING DISCREPANCIES TO EARTHSCAPE IMMEDIATELY.
15. EARTHSCAPE IS NOT RESPONSIBLE FOR THIRD PARTY USE OF THESE DRAWINGS

FASTENERS:

1. METRIC/IMPERIAL DIAMETER CONVERSIONS OF TYPICAL SIZES:
   1. 8mm=5/16", 10mm=3/8", 12mm=1/2", 25mm=1"
   2. ROUND UP TO NEAREST STANDARD LENGTH FOR MANUFACTURER
2. ALL FASTENERS ARE TO BE STAINLESS STEEL (UNLESS OTHERWISE NOTED)
3. ALL BOLT HOLES SHALL BE PRE-DRILLED AND SHALL BE NOT LESS THAN 1mm AND NOT GREATER THAN 2mm LARGER THAN THE NOMINAL HOLE DIAMETER
4. FOR PARTIALLY THREADED SCREWS, EMBED FULL THREAD INTO SECONDARY MEMBER OR TO A DEPTH AS SPECIFIED ON DRAWINGS.
5. WHERE PRE-DRILLING OF SCREWS IS RECOMMENDED BY THE SCREW MANUFACTURER, HOLE DIAMETER TO BE STRICTLY AS PER MANUFACTURER'S INSTRUCTIONS.
6. DO NOT USE IMPACT DRILLS FOR SCREW INSTALLATION.
7. DO NOT USE A HAMMER TO ENGAGE THE FASTENER WITH THE WOOD.
8. ALL FASTENERS TO BE INSTALLED AS POSITIONED ON DRAWINGS.
9. ALL BOLTED CONNECTIONS ARE TO BE SECURED USING VIBRA-TITE "VC-3" THREAD-LOCKING FLUID OR EQUIVALENT

EXCAVATION AND BACKFILL

1. STRIP ALL TOP SOIL, PAVING, AND DELETERIOUS MATERIAL FROM UNDER FOOTINGS.
2. LOCATE ALL SERVICES PRIOR TO COMPLETING EXCAVATION.
3. ALL FOOTINGS SHALL BE PLACED AT A MINIMUM OF 1200mm BELOW GRADE UNLESS OTHERWISE NOTED ON THE DRAWINGS.
4. SUPPORTING SUBGRADE AND FILL TO HAVE A MINIMUM BEARING CAPACITY OF 150 kPa.
5. ALL FOOTINGS AND SLABS TO BE PLACED ON EITHER NATIVE GRAVEL/SAND/CLAY OR 150mm OF GRANULAR A COMPACTED TO A MINIMUM STANDARD PROCTOR DRY DENSITY OF 98%.
6. BENEATH 150mm TOP LAYER OF COMPACTED GRANULAR A, GRANULAR B FILL CAN BE USED AS REQUIRED PLACED IN MAXIMUM 200mm LIFTS, COMPACTED TO A STANDARD PROCTOR DRY DENSITY OF 96%.
7. CONTRACTOR IS RESPONSIBLE FOR SUPPORT OF EXCAVATIONS DURING CONSTRUCTION AS REQUIRED.

CONCRETE

1. ALL CONCRETE WORK AND MATERIALS SHALL BE IN ACCORDANCE WITH CAN/CSA A23.1/2
2. ALL REINFORCING STEEL TO BE IN ACCORDANCE WITH CAN/CSA A23.1/2 INCLUDING FABRICATION, DETAILING, LAP SPLICES, PLACEMENT, FIXING AND COVER.
3. REINFORCING STEEL SHALL COMPLY WITH CAN/CSA G40.18
4. DO NOT ADD WATER TO CONCRETE ONSITE.
5. ENSURE A MINIMUM COVER OF 75mm TO THE GROUND IN ALL BELOW GRADE CONCRETE.
6. CONCRETE MATERIAL TO BE:
   1. FOOTINGS: CLASS F-2 CONCRETE WITH A MINIMUM 28 DAY COMPRESSIVE STRENGTH OF 25 MPa, MAXIMUM WATER/CEMENT RATIO OF 0.55, MAXIMUM COARSE AGGREGATE SIZE OF 20mm, 4-7% AIR CONTENT, AND A MAXIMUM SLUMP OF 50-100mm.
   2. SLAB ON GRADE: CLASS C-2 CONCRETE WITH A MINIMUM 28 DAY COMPRESSIVE STRENGTH OF 32 MPa, MAXIMUM WATER/CEMENT RATIO OF 0.45, MAXIMUM COARSE AGGREGATE SIZE OF 20mm, 5-8% AIR CONTENT AND A MAXIMUM SLUMP OF 50-100mm.
7. CONCRETE REINFORCING TO DEFORMED MINIMUM YIELD STRENGTH OF 400 MPa
8. PIT RUN GRAVEL WILL NOT BE ACCEPTABLE.
9. ALL REINFORCING CHAIRS SHALL BE PLASTIC
10. ALL FORM OIL TO BE NON-STAINING MINERAL OIL, FREE OF KEROSENE.
11. WELDED WIRE MESH SHALL BE IN ACCORDANCE WITH ASTM A1064.
12. VIBRATE ALL CONCRETE TO ENSURE THAT CONCRETE IS FREE FROM VOIDS AND OTHER DEFECTS.
13. MOIST CURE ALL CONCRETE 7 DAYS.
14. IN HOT OR COLD WEATHER CONDITIONS TAKE ADDITIONAL PRECAUTIONS AS PER CAN/CSA A23.1/2.
15. UNLESS NOTED OTHERWISE, FASTEN ALL HARDWARE TO CONCRETE USING EITHER:
    1. SIMPSON STRONG TIE "TITEN HD" Ø½ X 5" SS CONCRETE SCREW
    2. THREADED ROD WITH SIMPSON STRONG TIE "SET 3G" OR HILTI "HY-200" EPOXY.
    3. REFER TO RESPECTIVE MANUFACTURER's INSTRUCTIONS FOR INSTALLATION PROCEDURE

FOR U.S. INSTALLATION SITES USE THESE NOTES

GENERAL NOTES

1. THIS DRAWING IS THE PROPERTY OF EARTHSCAPE. DO NOT COPY OR DISTRIBUTE WITHOUT PERMISSION.
2. EARTHSCAPE RESERVES OWNERSHIP OF ALL DRAWINGS, SPECIFICATIONS, AND OTHER DOCUMENTS, INCLUDING THOSE IN ELECTRONIC FORM, AUTHORED BY EARTHSCAPE. UPON SIGNING CONTRACT, EARTHSCAPE GRANTS THE OWNER LIMITED LICENSE TO USE THE INSTRUMENTS OF SERVICE SOLELY FOR USING AND MAINTAINING, OR ADDING TO THE PROJECT
3. ENGINEERING AND STRUCTURAL REVIEW: EARTHSCAPE PROVIDES STAMPED DRAWINGS AND/OR STRUCTURAL LOAD TESTING FOR ONTARIO, AS REQUIRED BY ASTM F-1487-17. LOCAL ENGINEERING APPROVAL FOR JURISDICTIONS OUTSIDE ONTARIO, IF REQUIRED, TO BE PROVIDED BY OTHERS.
4. EARTHSCAPE DESIGNS AND ENGINEERS FOR A FROST PENETRATION DEPTH OF 48". SLAB ON GRADE CONSTRUCTION IS SUBJECT TO FROST MOVEMENTS. FREE DRAINING SOIL UNDER THE FOOTING IS USED TO MINIMIZE FROST EFFECTS. OVERALL TOWER/SLAB MOVEMENT MAY OCCUR.
5. INSPECTION AND TESTING: INSPECTION, TESTING (INCLUDING CONCRETE TESTING), PRE-CONSTRUCTION SURVEYS TO BE COMPLETED BY OTHERS.
6. SURFACING: WHEN AN IMPACT-ABSORBING SURFACE MATERIAL IS REQUIRED, IT MUST COMPLY WITH ASTM F-1292 (MOST RECENT EDITION) FOR THE DEFINED FALL HEIGHT OF THE EQUIPMENT SPECIFIED IN DRAWINGS BY EARTHSCAPE OR A CONTRACTUALLY OBLIGATED CRITICAL HEIGHT SPECIFIED IN ADVANCE. ENSURE USE ZONES, SAFETY ZONES, AND/OR PROTECTIVE SURFACING ZONES AROUND ALL PLAY EQUIPMENT ARE COMPLIANT WITH ASTM F-1292 (MOST RECENT EDITION) - BY OTHERS.
7. SURVEY AND FACILITIES: SURVEY WORK INCLUDING BENCHMARKS, LINES AND LEVELS, PRE-CONSTRUCTION SURVEY, AS-BUILT DRAWINGS BY OTHERS
8. THESE DRAWINGS ARE INTENDED TO BE PRINTED AT 11" X 17" PAGE SIZE. DO NOT SCALE
9. ALL MEASUREMENTS ARE IN FEET-INCHES UNLESS OTHERWISE STATED
10. EQUIPMENT SHALL COMPLY WITH THE REQUIREMENTS OF ASTM F1487-17 "STANDARD CONSUMER SAFETY PERFORMANCE SPECIFICATION FOR PLAYGROUND EQUIPMENT"
11. VISUAL DETAILS INCLUDING BUT NOT LIMITED TO: NET SPACING, ROPE APPEARANCE AND COLOURS ARE FOR CONCEPTUAL PURPOSES ONLY
12. ALWAYS WEAR PROPER PPE AND FOLLOW SAFE PRACTICES.
13. ALL WORK SHALL BE COMPLETED IN ACCORDANCE WITH THE OCCUPATIONAL HEALTH AND SAFETY ACT.
14. CONTRACTOR IS RESPONSIBLE FOR CONFIRMING ALL SITE CONDITIONS AND REPORTING DISCREPANCIES TO EARTHSCAPE IMMEDIATELY.
15. EARTHSCAPE IS NOT RESPONSIBLE FOR THIRD PARTY USE OF THESE DRAWINGS

FASTENERS

1. METRIC/IMPERIAL DIAMETER CONVERSIONS:
   1. 8mm=5/16", 10mm=3/8", 12mm=1/2", 25mm=1"
   2. ROUND UP TO NEAREST STANDARD LENGTH FOR MANUFACTURER
2. ALL FASTENERS ARE TO BE STAINLESS STEEL (UNLESS OTHERWISE NOTED)
3. ALL BOLT HOLES SHALL BE PRE-DRILLED AND SHALL BE NOT LESS THAN 3/64" AND NOT GREATER THAN 5/64" LARGER THAN THE NOMINAL HOLE DIAMETER
4. FOR PARTIALLY THREADED SCREWS, EMBED FULL THREAD INTO SECONDARY MEMBER OR TO A DEPTH AS SPECIFIED ON DRAWINGS.
5. WHERE PRE-DRILLING OF SCREWS IS RECOMMENDED BY THE SCREW MANUFACTURER, HOLE DIAMETER TO BE STRICTLY AS PER MANUFACTURER'S RECOMMENDATIONS.
6. DO NOT USE IMPACT DRILLS FOR SCREW INSTALLATION.
7. DO NOT USE A HAMMER TO ENGAGE THE FASTENER WITH THE WOOD.
8. ALL FASTENERS TO BE INSTALLED AS POSITIONED ON SHOP DRAWINGS.
9. ALL BOLTED CONNECTIONS ARE TO BE SECURED USING VIBRA-TITE "VC-3" THREAD-LOCKING FLUID OR EQUIVALENT

EXCAVATION AND BACKFILL

1. STRIP ALL TOP SOIL, PAVING, AND DELETERIOUS MATERIAL FROM UNDER FOOTINGS.
2. LOCATE ALL SERVICES PRIOR TO COMPLETING EXCAVATION.
3. ALL FOOTINGS SHALL BE PLACED AT A MINIMUM OF 4' BELOW GRADE UNLESS OTHERWISE NOTED ON THE DRAWINGS.
4. SUPPORTING SUBGRADE AND FILL TO HAVE A MINIMUM BEARING CAPACITY OF 3000PSF.
5. ALL FOOTINGS AND SLABS TO BE PLACED ON EITHER NATIVE GRAVEL/SAND/CLAY OR 6" OF GRANULAR A COMPACTED TO A MINIMUM STANDARD PROCTOR DRY DENSITY OF 98%.
6. BENEATH 6" TOP LAYER OF COMPACTED GRANULAR A, GRANULAR B FILL CAN BE USED AS REQUIRED PLACED IN MAXIMUM 8" LIFTS, COMPACTED TO A STANDARD PROCTOR DRY DENSITY OF 96%.
7. CONTRACTOR IS RESPONSIBLE FOR SUPPORT OF EXCAVATIONS DURING CONSTRUCTION AS REQUIRED.

CONCRETE

1. ALL CONCRETE WORK AND MATERIALS SHALL BE IN ACCORDANCE WITH ACI-301
2. ALL REINFORCING STEEL TO BE IN ACCORDANCE WITH ASTM A615 AND ACI-301 INCLUDING FABRICATION, DETAILING, LAP SPLICES, PLACEMENT, FIXING AND COVER.
3. REINFORCING STEEL SHALL COMPLY WITH ASTM A615
4. DO NOT ADD WATER TO CONCRETE ONSITE.
5. ENSURE A MINIMUM COVER OF 3" TO THE GROUND IN ALL BELOW GRADE CONCRETE.
6. CONCRETE MATERIAL TO BE:
   1. FOOTINGS AND SLABS: CONCRETE WITH A MINIMUM 28 DAY COMPRESSIVE STRENGTH OF 4000 PSI, MAXIMUM WATER/CEMENT RATIO OF 0.50, MAXIMUM COARSE AGGREGATE SIZE OF 3/4", 4-7% AIR CONTENT (WHERE CONCRETE PLACED ABOVE FROST), AND A MAXIMUM SLUMP OF 2 - 4 INCHES.
7. CONCRETE REINFORCING TO DEFORMED MINIMUM YIELD STRENGTH OF 58000 PSI
8. PIT RUN GRAVEL WILL NOT BE ACCEPTABLE.
9. ALL REINFORCING CHAIRS SHALL BE PLASTIC
10. ALL FORM OIL TO BE NON-STAINING MINERAL OIL, FREE OF KEROSENE.
11. WELDED WIRE MESH SHALL BE IN ACCORDANCE WITH ASTM A1064.
12. VIBRATE ALL CONCRETE TO ENSURE THAT CONCRETE IS FREE FROM VOIDS AND OTHER DEFECTS.
13. MOIST CURE ALL CONCRETE 7 DAYS.
14. IN HOT OR COLD WEATHER CONDITIONS TAKE ADDITIONAL PRECAUTIONS AS PER ACI 305 OR 306 RESPECTIVELY.
15. UNLESS NOTED OTHERWISE, FASTEN ALL HARDWARE TO CONCRETE USING EITHER:
    1. SIMPSON STRONG TIE "TITEN HD" Ø½ X 5" SS CONCRETE SCREW
    2. THREADED ROD WITH SIMPSON STRONG TIE "SET 3G" OR HILTI "HY-200" EPOXY
    3. REFER TO RESPECTIVE MANUFACTURER'S INSTRUCTIONS FOR INSTALLATION PROCEDURE
    4.

PROPERTY OF EARTHSCAPE PLAY INC. - DO NOT COPY. DO NOT DISTRIBUTE.

INSTALLATION INSTRUCTIONS

EARTHSCAPE COLLECTIONS

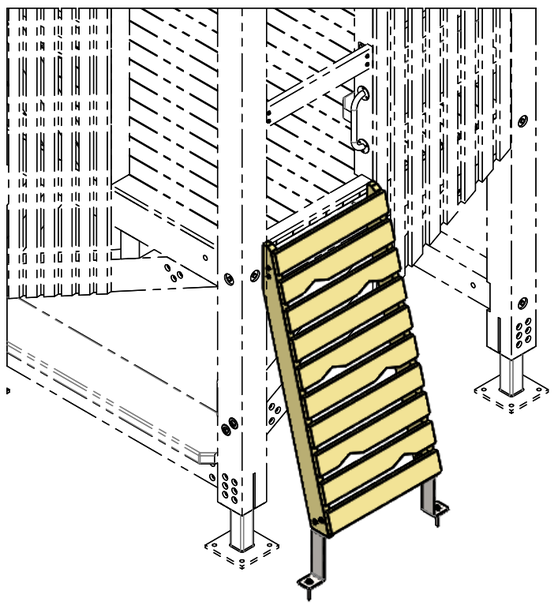

LICENSED PROFESSIONAL ENGINEER
M. JOHNSON
100514620
Sep 22, 2025
PROVINCE OF ONTARIO

WITZEL DYCE
ENGINEERING INC.
PROJECT NO.: 12936-165

CLADDING LADDER

THESE INSTRUCTIONS APPLY TO THE FOLLOWING VERSIONS OF THIS PRODUCT:

F00228 - CLADDING LADDER

WHICH IS DESIGNED TO BE INSTALLED ON THE FOLLOWING PRODUCTS:

1 LEVEL TIMBER TOWER
2 LEVEL TIMBER TOWER
3 LEVEL TIMBER TOWER

NOTE: COLOURS SHOWN ARE REPRESENTATIONAL AND MAY NOT BE THE SAME AS THOSE OF THE SUPPLIED PRODUCT

FOR CSA AND ASTM SPECIFICATIONS AND GENERAL NOTES SEE MAIN STRUCTURE INSTALLATION PACKAGE

PROPERTY OF EARTHSCAPE PLAY INC. - DO NOT COPY. DO NOT DISTRIBUTE.

PLEASE READ ALL INSTRUCTIONS

Before starting to install this equipment be sure to read through and understand these instructions.

If you have any questions, contact your local dealer for assistance before proceeding.

MEASUREMENTS AND STANDARDS

Measurements have been provided in both metres and [feet-inches]. Ensure to follow standards noted for the location in which this play equipment is being installed. Those marked CSA are to be used in Canada and those marked ASTM to be used in the United States.

LIST OF ABBREVIATIONS

AYC = Alaskan Yellow Cedar
WRC = Western Red Cedar
DPS = Designated Play Surface
SS = Stainless Steel
HDG = Hot Dipped Galvanized
WWM = Welded Wire Mesh
TYP = Typical
C/W = Complete With
UNO = Unless Noted Otherwise
EWF = Engineered Wood Fiber
PIP = Poured-In-Place Rubber Surfacing
PT = Pressure Treated

TOOLS SUPPLIED WITH THIS PRODUCT

- No tools supplied

TOOLS THE INSTALLER NEEDS TO SUPPLY

- High torque drill
- 1/2" impact driver
- Set of wood drill bits - up to 1/2"
- Set of impact sockets - up to 1"
- 1/2" ratcheting socket wrench
- T25 drive bit
- T40 drive bit
- Hammer drill
- Concrete drill bit, 1/2" x 8"

EQUIPMENT THE INSTALLER NEEDS TO SUPPLY

- No special equipment required

INSTALLER CREW AND TIME REQUIRED

Number of people needed: 2
Typical total person-hours to install: 2
Time breakdown:

- 1 hours x 2 people to position and anchor the ladder in place

MATERIALS THE INSTALLER NEEDS TO SUPPLY

No additional materails required

WARNINGS

These instructions do not provide specific guidance on the use of tools or the lifting and moving heavy objects. It is assumed that competent people are installing this product who are familiar with using the tools and equipment required and are knowledgeable and skilled at lifting and positioning heavy objects.

PROPERTY OF EARTHSCAPE PLAY INC. - DO NOT COPY. DO NOT DISTRIBUTE.

MAKE SURE YOU HAVE ALL THE PARTS

Examine the equipment and ensure you have all the required parts listed in the table below.

PART IMAGE	ITEM NO.	PART NO.	DESCRIPTION	QTY.
	1	H30059	WASHER 5/8" X 1-1/2" SS	2
	2	H60020	TITEN HD 1/2" X 5" CONCRETE SCREW	2
	3	H16715	WOOD SCREW, WASHER HEAD, M8x80, SS	4
SEE IMAGE THIS SHEET	4		PRE-ASSEMBLED CLADDING LADDER	1

IMAGES OF FASTENERS IN THIS TABLE ARE REPRESENTATIONAL TO HELP IDENTIFY PARTS.

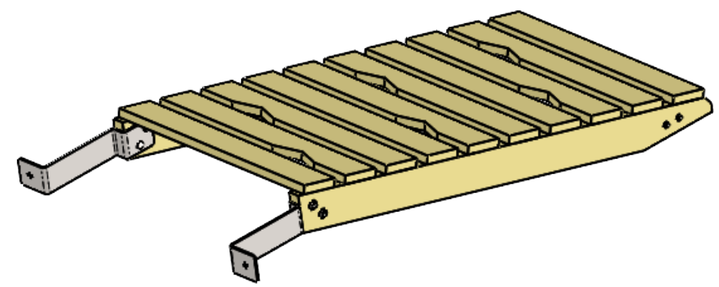

4 PRE-ASSEMBLED CLADDING LADDER

PROPERTY OF EARTHSCAPE PLAY INC. - DO NOT COPY. DO NOT DISTRIBUTE.

CLADDED LADDER INSTALLATION

CLADDING LADDER

STEP 1 - CONFIRM WHERE THE ACCESSORY IS TO BE INSTALLED

Review the complete tower installation package to determine on which side this accessory is to be installed and what the finished product should look like. The images shown on this page are representational and may not match your exact installation.

STEP 2 - POSITION LADDER

Align ladder with correct opening and position so top of ladder is flush with top of grab rail noted in Section A-A this sheet

Bottom of ladder should be located as per dimension noted in Section A-A

STEP 3 - SECURE TOP OF LADDER TO TOWER

You will need to remove the top one or two boards from the ladder to access the attachment brackets. Make sure to save screws and boards to be reinstalled after ladder secured.

Pre-drill holes for screws then screw brackets to timber beam as per Detail B this sheet.

Reinstall removed boards.

STEP 4 - SECURE LADDER BASE BRACKETS TO CONCRETE PAD

Confirm bottom of ladder is still in the correct location as per Step 2, then pre-drill holes in concrete pad and anchor the base bracket to the pad as per Detail C this sheet.

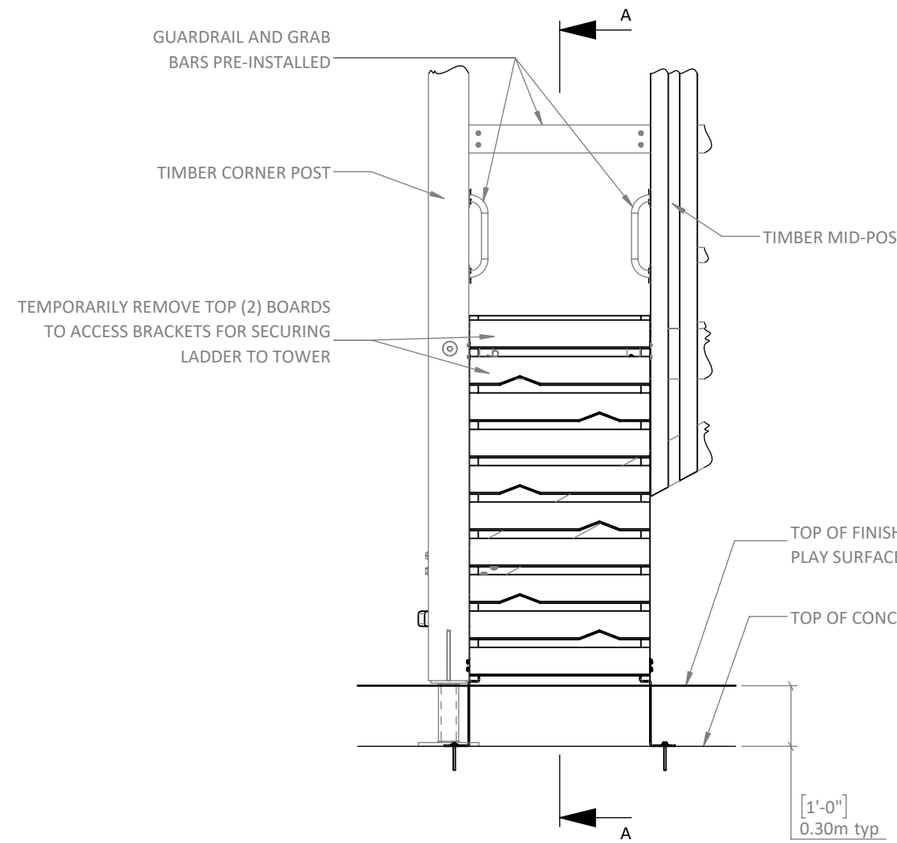

SAMPLE ELEVATION

(ACTUAL INSTALLATION MIGHT BE A MIRRORED VERSION OF THIS VIEW)

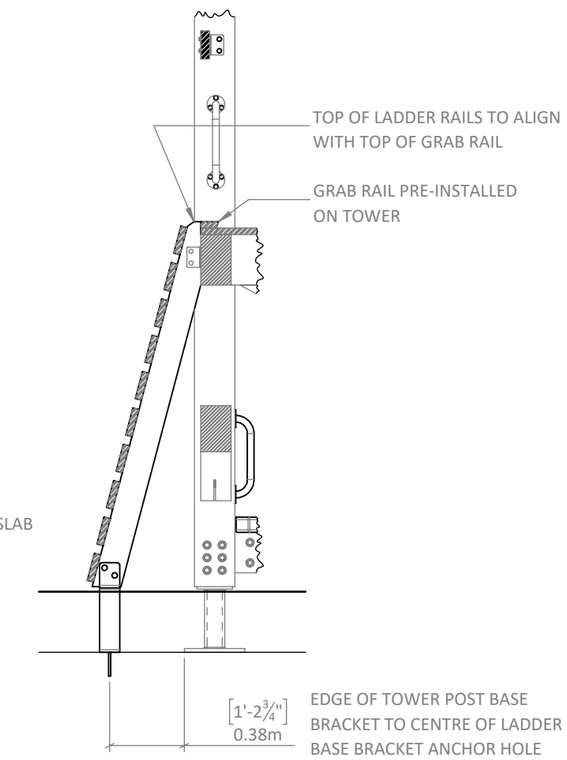

SECTION A-A

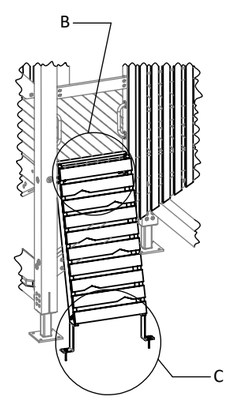

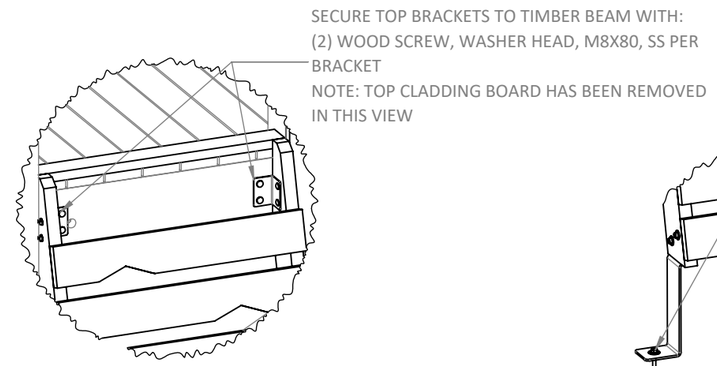

DETAIL B

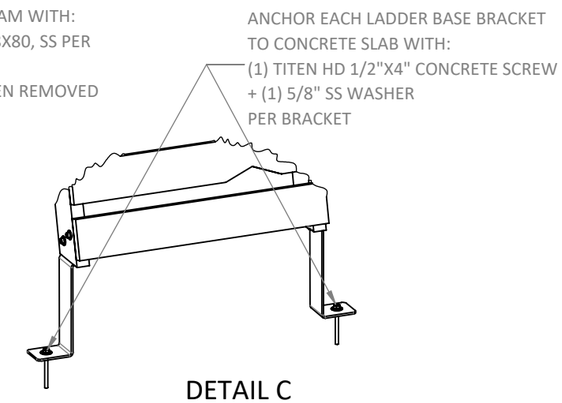

DETAIL C

PROPERTY OF EARTHSCAPE PLAY INC. - DO NOT COPY. DO NOT DISTRIBUTE.

INSTALLATION INSTRUCTIONS

EARTHSCAPE COLLECTIONS

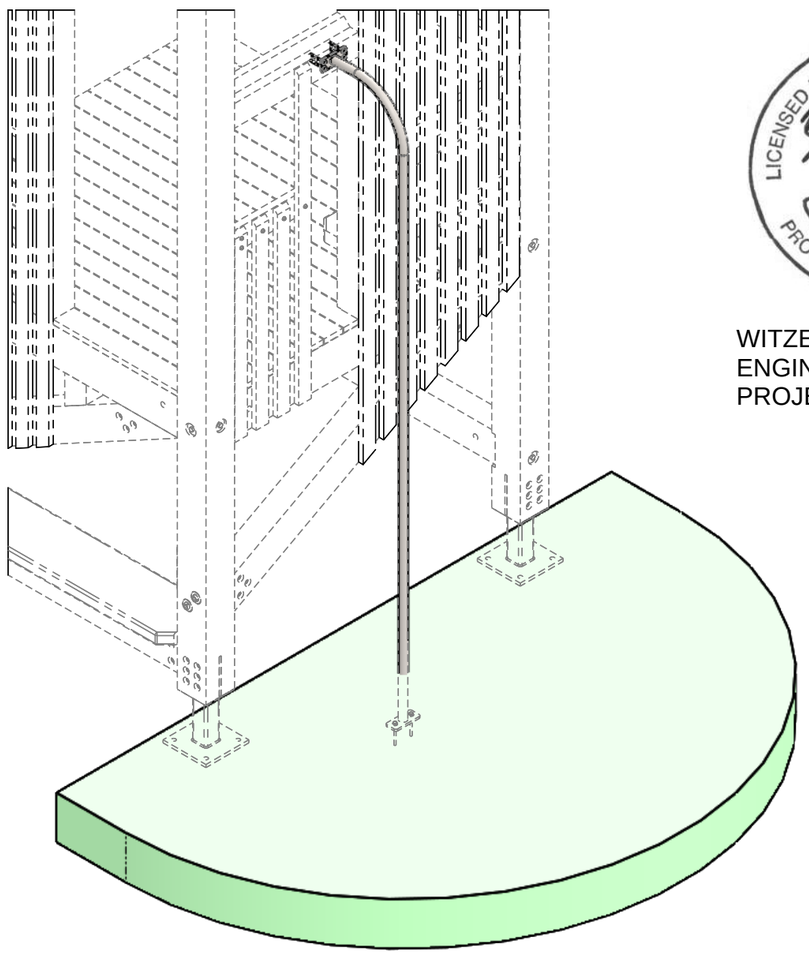

WITZEL DYCE
ENGINEERING INC.
PROJECT NO.: 12936-165

FIRE POLE

THESE INSTRUCTIONS APPLY TO THE FOLLOWING VERSIONS OF THIS PRODUCT:

F00302 - FIRE POLE - SURFACE MOUNT - 6' PLATFORM

WHICH IS DESIGNED TO BE INSTALLED ON THE FOLLOWING PRODUCTS:

1 LEVEL TIMBER TOWERS
2 LEVEL TIMBER TOWER
3 LEVEL TIMBER TOWER

NOTE: COLOURS SHOWN ARE REPRESENTATIONAL AND MAY NOT BE THE SAME AS THOSE OF THE SUPPLIED PRODUCT

FOR CSA AND ASTM SPECIFICATIONS AND GENERAL NOTES SEE MAIN STRUCTURE INSTALLATION PACKAGE

DATE DOCUMENT RELEASED 2024-06-17
DOCUMENT NUMBER: 1051479-R4

PROPERTY OF EARTHSCAPE PLAY INC. - DO NOT COPY. DO NOT DISTRIBUTE.

PLEASE READ ALL INSTRUCTIONS

Before starting to install this equipment be sure to read through and understand these instructions.
If you have any questions, contact your local dealer for assistance before proceeding.

MEASUREMENTS AND STANDARDS

Measurements have been provided in both metres and [feet-inches]. Ensure to follow standards noted for the location in which this play equipment is being installed. Those marked CSA are to be used in Canada and those marked ASTM to be used in the United States.

LIST OF ABBREVIATIONS

AYC = Alaskan Yellow Cedar
WRC = Western Red Cedar
DPS = Designated Play Surface
SS = Stainless Steel
HDG = Hot Dipped Galvanized
WWM = Welded Wire Mesh
TYP = Typical
C/W = Complete With
UNO = Unless Noted Otherwise
EWF = Engineered Wood Fiber
PIP = Poured-In-Place Rubber Surfacing
PT = Pressure Treated

TOOLS SUPPLIED WITH THIS PRODUCT

- No tools supplied

TOOLS THE INSTALLER NEEDS TO SUPPLY

- High torque drill
- Set of wood drill bits - up to 1/2"
- 1/2" impact driver
- Set of impact sockets - up to 1"
- 1/2" ratcheting socket wrench
- T25 drive bit
- T40 drive bit
- Hammer drill
- Concrete drill bit, 1/2" x 8"

EQUIPMENT THE INSTALLER NEEDS TO SUPPLY

- No special equipment required

INSTALLER CREW AND TIME REQUIRED

Number of people needed: 2
Typical total person-hours to install: 2
Time breakdown:

- 1 hour x 2 to position and anchor the fire pole

MATERIALS THE INSTALLER NEEDS TO SUPPLY

- No special materials required

WARNINGS

These instructions do not provide specific guidance on the use of tools or the lifting and moving heavy objects. It is assumed that competent people are installing this product who are familiar with using the tools and equipment required and are knowledgeable and skilled at lifting and positioning heavy objects.

PROPERTY OF EARTHSCAPE PLAY INC. - DO NOT COPY. DO NOT DISTRIBUTE.

MAKE SURE YOU HAVE ALL THE PARTS

Examine the equipment and ensure you have all the required parts listed in the table below.

PART IMAGE	ITEM NO.	PART NO.	DESCRIPTION	QTY.
SEE IMAGE THIS SHEET	1	B00089	FIRE POLE - SURFACE MOUNT	1
	2	H60020	Titen HD 1/2" x 5" Concrete Screw SS	2
	3	H16685	ASSY SK A2 8mm X 100mm SS	4

IMAGES OF FASTENERS IN THIS TABLE ARE REPRESENTATIONAL TO HELP IDENTIFY PARTS.

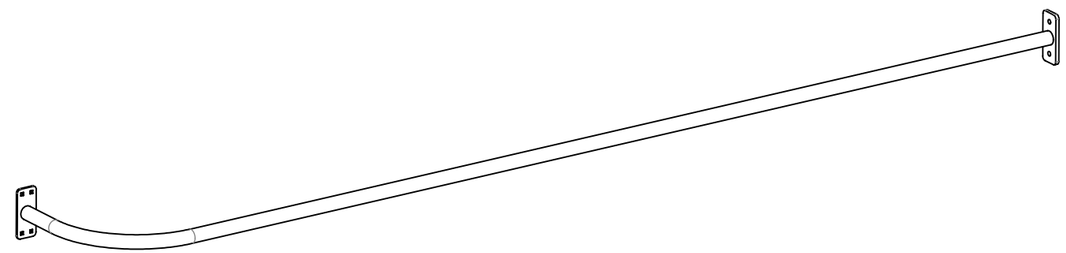

1 FIRE POLE - SURFACE MOUNT

PROPERTY OF EARTHSCAPE PLAY INC. - DO NOT COPY. DO NOT DISTRIBUTE.

FIRE POLE INSTALLATION

STEP 1 - CONFIRM WHERE THE ACCESSORY IS TO BE INSTALLED

Review the complepte tower installation package to determine on which side this accessory is to be installed and what the finished product should look like. The images shown on this page are representational and may not match your exact installation. Your installation could be a mirror image of what is shown on this sheet.

STEP 2 - LAYOUT LOCATION OF FIRE POLE

Mark the centre of the upper opening on the timber where the Fire Pole Top Plate will be secured as per Detail B

Mark the target location on the concrete pad for the centre of the Fire Pole Base Flange relative the the timber tower post base plates as shown in the Sample Elevation and Section A-A.

STEP 3 - ROUGH ALIGNMENT OF FIRE POLE

Align the top mounting plate of fire pole to the upper centre mark and temporarily hold in place.

Align the centre of the Base Flange with the mark on the concrete foundation pad and then check to ensure Fire Pole is plumb and the bottom mounting plate is resting flat on the concrete pad.

STEP 4 - ANCHOR FIRE POLE TO TOWER AND PAD

Secure the top plate to timber beam with screws as shown in Detail B. Predrill all screw holes as per manufacturer's instructions.

Secure base flange to concrete slab as noted in Sample Elevation.

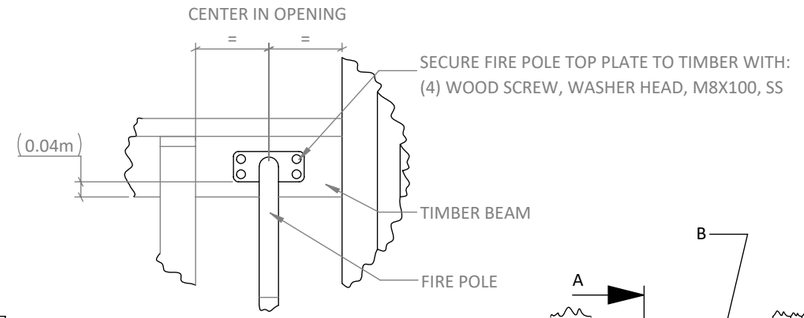

DETAIL B

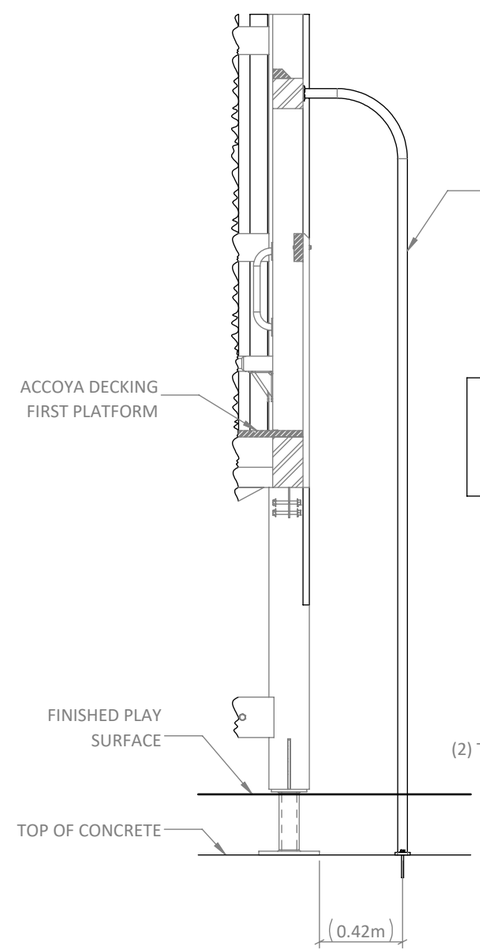

SECTION A-A

DIMENSIONS IN PARENTHESIS ARE APPROXIMATE. MINOR ADJUSTMENT MIGHT BE REQUIRED TO ENSURE FIRE POLE IS PLUMB AND BASE FLANGE RESTING ON CONCRETE PAD

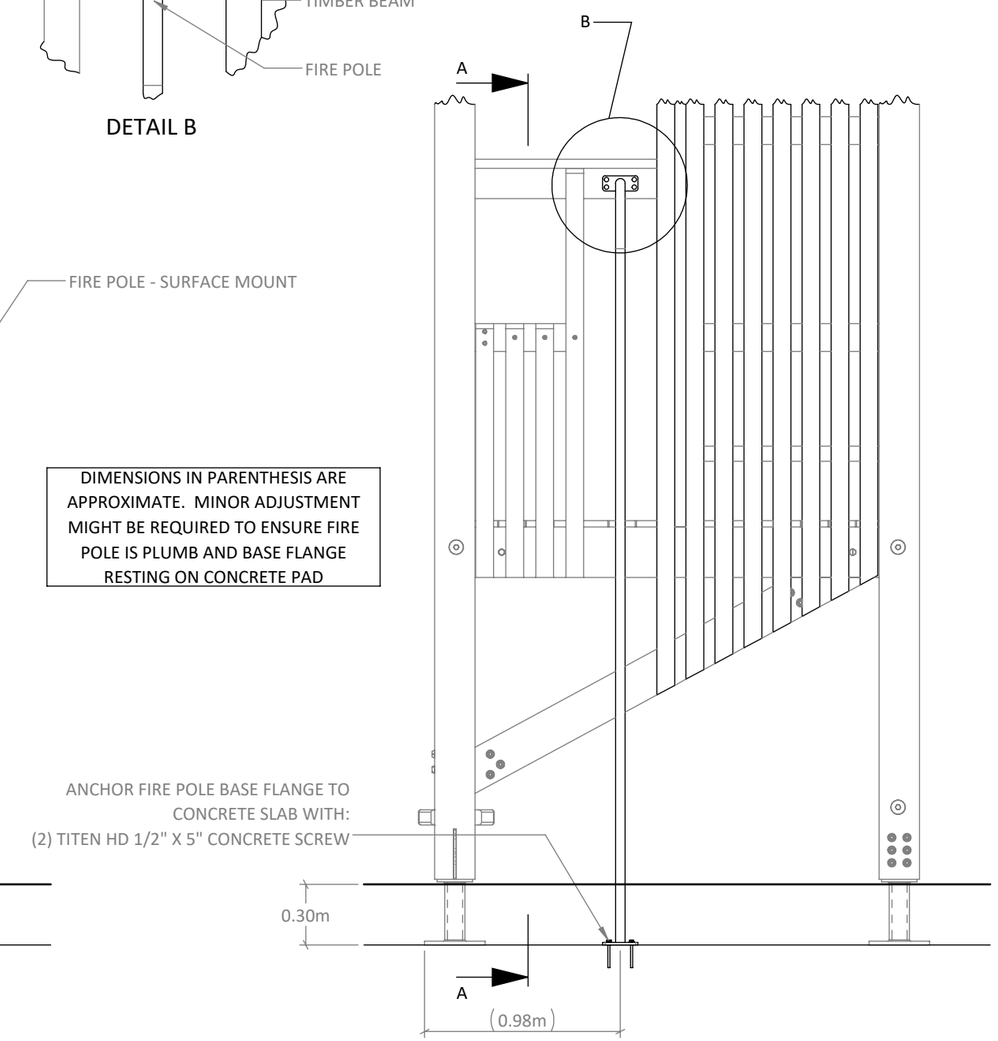

SAMPLE ELEVATION
(ACTUAL INSTALLATION MIGHT BE A MIRRORED VERSION OF THIS VIEW)

PROPERTY OF EARTHSCAPE PLAY INC. - DO NOT COPY. DO NOT DISTRIBUTE.

INSTALLATION INSTRUCTIONS

EARTHSCAPE COLLECTIONS

LICENSED PROFESSIONAL ENGINEER
M. JOHNSON
100514620
Sep 22, 2025
PROVINCE OF ONTARIO

WITZEL DYCE
ENGINEERING INC.
PROJECT NO.: 12936-165

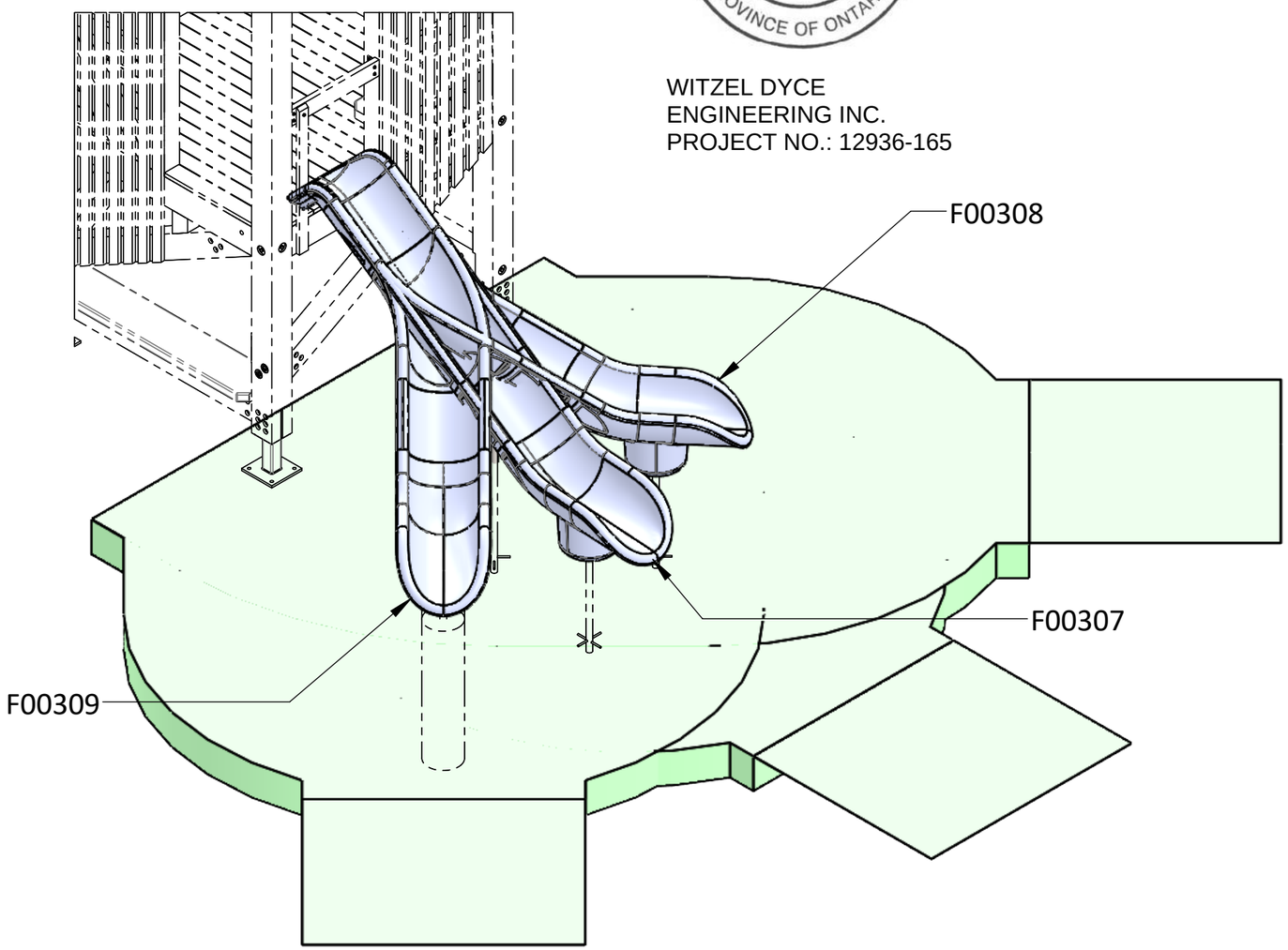

OPEN SLIDES - STARGLIDE

THESE INSTRUCTIONS APPLY TO THE FOLLOWING VERSIONS OF THIS PRODUCT:

F00307 - STARGLIDE 6' OPEN STRAIGHT SLIDE
F00308 - STARGLIDE 6' VEER LEFT SLIDE
F00309 - STARGLIDE 6' VEER RIGHT SLIDE

WHICH ARE DESIGNED TO BE INSTALLED ON THE FOLLOWING PRODUCTS:

F00182 - 2 LEVEL TIMBER TOWER
F00185 - 1 LEVEL TIMBER TOWER
F00407 - 2 LEVEL TIMBER TOWER
F00408 - 3 LEVEL TIMBER TOWER

NOTE: COLOURS SHOWN ARE REPRESENTATIONAL AND MAY NOT BE THE SAME AS THOSE OF THE SUPPLIED PRODUCT

FOR CSA AND ASTM SPECIFICATIONS AND GENERAL NOTES SEE MAIN STRUCTURE INSTALLATION PACKAGE

DATE DOCUMENT RELEASED 2021-09-06
DOCUMENT NUMBER: 1051525-R4

PROPERTY OF EARTHSCAPE PLAY INC. - DO NOT COPY. DO NOT DISTRIBUTE.

PLEASE READ ALL INSTRUCTIONS

Before starting to install this equipment be sure to read through and understand these instructions.

If you have any questions, contact your local dealer for assistance before proceeding.

MEASUREMENTS AND STANDARDS

Measurements have been provided in both metres and [feet-inches]. Ensure to follow standards noted for the location in which this play equipment is being installed. Those marked CSA are to be used in Canada and those marked ASTM to be used in the United States.

LIST OF ABBREVIATIONS

AYC = Alaskan Yellow Cedar
WRC = Western Red Cedar
DPS = Designated Play Surface
SS = Stainless Steel
HDG = Hot Dipped Galvanized
WWM = Welded Wire Mesh
TYP = Typical
C/W = Complete With
UNO = Unless Noted Otherwise
EWF = Engineered Wood Fiber
PIP = Poured-In-Place Rubber Surfacing
PT = Pressure Treated

TOOLS SUPPLIED WITH THIS PRODUCT

- No tools supplied

TOOLS THE INSTALLER NEEDS TO SUPPLY

- High torque drill
  - recommend right angle or flexible drive
- Set of wood drill bits - up to 1/2"
- 1/2" impact driver
- Set of impact sockets - up to 1"
- 1/2" ratcheting socket wrench
- Set of imperial hex keys - up to 1/4"
- T25 drive bit
- T40 drive bit
- Transit or Laser Level
- Rigging and lifting straps

EQUIPMENT THE INSTALLER NEEDS TO SUPPLY

Machine to aid in lifting and positioning the slide.

- Site assembled Starglide plastic slide +/- 80 kg [180 lbs]

INSTALLER CREW AND TIME REQUIRED

Number of people needed: 2
Typical total person-hours to install: 5 + concrete cure time
Time breakdown:

- 1 hour x 2 people for excavation and pouring concrete
- 1 hour x 2 people for onsite fabrication and play equipment installation
- Time for concrete cure
- 1 hour x 1 person to remove bracing and install string probe kit

MATERIALS THE INSTALLER NEEDS TO SUPPLY

- Concrete

WARNINGS

These instructions do not provide specific guidance on the use of tools or the lifting and moving heavy objects. It is assumed that competent people are installing this product who are familiar with using the tools and equipment required and are knowledgeable and skilled at lifting and positioning heavy objects.

PROPERTY OF EARTHSCAPE PLAY INC. - DO NOT COPY. DO NOT DISTRIBUTE.

MAKE SURE YOU HAVE ALL THE PARTS

Examine the equipment and ensure you have all the required parts listed in the tables below.

PART IMAGE	ITEM NO.	PART NO.	DESCRIPTION	QTY.
SEE STANDARD DETAIL SD-035A AT PACK OF THIS PACKAGE	1	B00002	STRING PROBE KIT 135°	1
SEE IMAGE THIS SHEET	2	B00047	BRACKET SLIDE FOOTBUCK	1
SEE IMAGE THIS SHEET	3	B00056-70	SPI SLIDE SUPPORT POST - 70"	1
	4	H16674	ASSY SK A2 8mm X 80mm SS	3
ONE OF THE FOLLOWING SLIDES WILL BE SUPPLIED AS PER THE PRODUCT NUMBER ORDERED				
SEE IMAGE THIS SHEET	5A	SL0010	6' STARGLIDE SLIDE STRAIGHT (F00307)	1
SEE IMAGE THIS SHEET	5B	SL0018	6' STARGLIDE SLIDE VEER LEFT (F00308)	1
SEE IMAGE THIS SHEET	5C	SL0019	6' STARGLIDE SLIDE VEER RIGHT (F00309)	1

IMAGES OF FASTENERS IN THIS TABLE ARE REPRESENTATIONAL AND ARE PROVIDED TO HELP IDENTIFY PARTS.

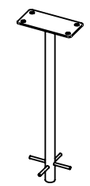

2 BRACKET SLIDE FOOTBUCK

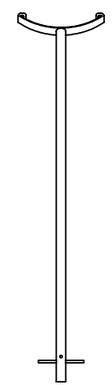

3 SPI SLIDE SUPPORT POST - 70"

5A

6' STARGLIDE SLIDE - STRAIGHT
(FOR PRODUCT F00307)
DOES NOT COME ASSEMBLED

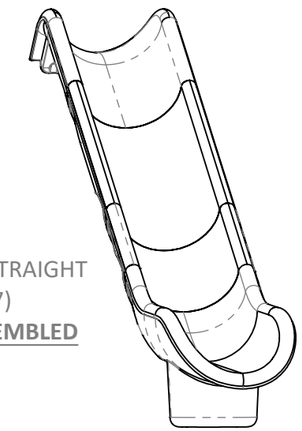

OR

5B

6' STARGLIDE SLIDE - VEER LEFT
(FOR PRODUCT F00308)
DOES NOT COME ASSEMBLED

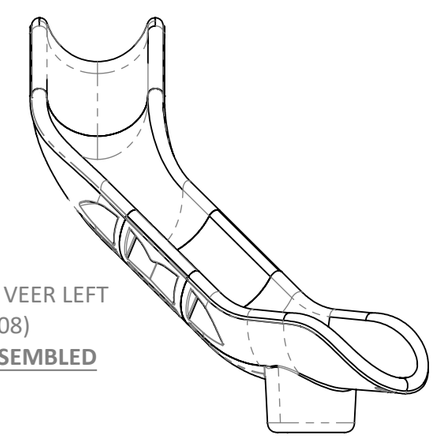

OR

5C

6' STARGLIDE SLIDE - VEER RIGHT
(FOR PRODUCT F00309)
DOES NOT COME ASSEMBLED

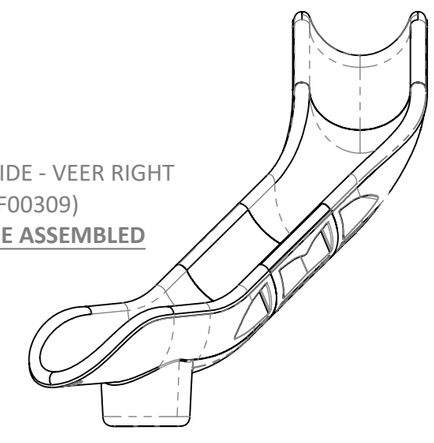

PROPERTY OF EARTHSCAPE PLAY INC. - DO NOT COPY. DO NOT DISTRIBUTE.

POSITION SLIDE

OPEN SLIDES - STARGLIDE

STEP 1 - CONFIRM WHERE THE ACCESSORY IS TO BE INSTALLED

Review the complete tower installation package and determine which side the slide is to be installed and what the finished product should look like. The images shown on this page are representational and may not match your exact installation. Your installation could be a mirror image of what is shown on this sheet and the shape of the slide could differ depending on the product number ordered.

STEP 2 - ASSEMBLE THE SLIDE AND SUPPORT POSTS

The plastic parts of the slide will arrive in pieces. Assemble using manufacturer's supplied hardware and instructions.
Secure the Middle Support Post to the slide (SPI Slide Support Post - 70") as per detail SD-007 at the back of this package
Secure the Slide Base Bracket (Bracket Slide Footbuck) to the slide as per detail SD-006 at the back of this package.

STEP 3 - POSITION SLIDE

With the slide fully assembled, position the top of the slide in the prefabricated notch in the tower. Centre in the opening as per Detail A this sheet.

Position the 2 support posts in the pre-augered holes (**as per complete tower installation package**).

Temporarily brace the slide to ensure the exit of the slide meets the target ***exit height*** above the finished play surface as per the Sample Side Elevation (this sheet) and detail SD-006 at the back of this package.

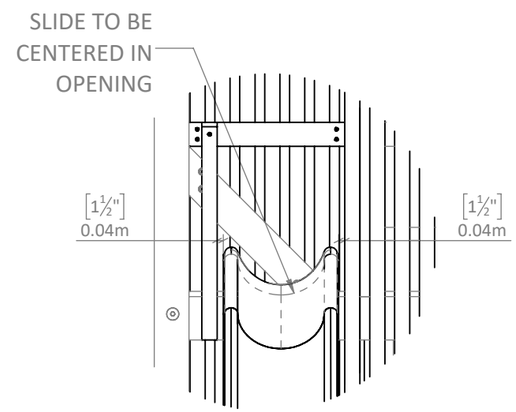

DETAIL A

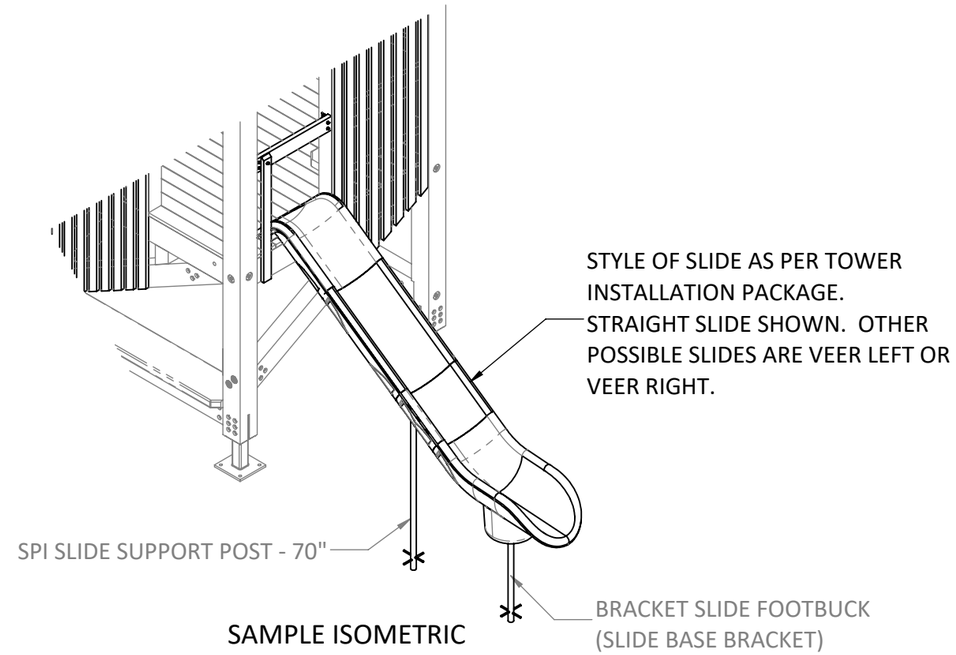

SAMPLE ISOMETRIC

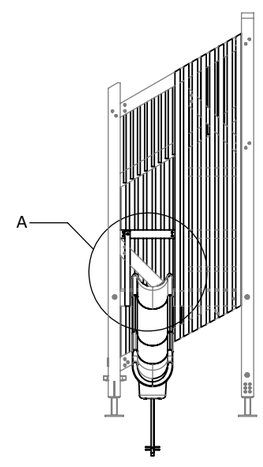

SAMPLE FRONT ELEVATION

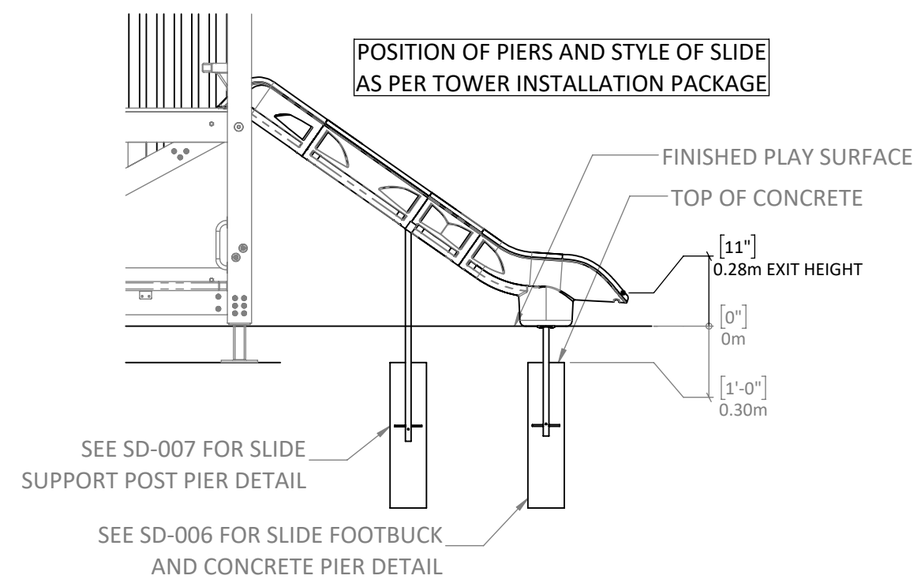

SAMPLE SIDE ELEVATION

PROPERTY OF EARTHSCAPE PLAY INC. - DO NOT COPY. DO NOT DISTRIBUTE.

STEP 4 - SECURE TOP OF SLIDE TO TOWER

Predrill and install the screws at the top of the slide as per Detail B this sheet

STEP 5 - POUR CONCRETE PIERS

Pour concrete piers as per details SD-006 and SD-007 at back of this package. Allow concrete to cure prior to proceeding to step 6.

STEP 6 - REMOVE BRACING

Once concrete piers have cured, remove temporary slide bracing.

STEP 7 - INSTALL STRING PROBE KIT

Install the string probe kit at the top of the slide as per detail SD-035A at the back of this package.

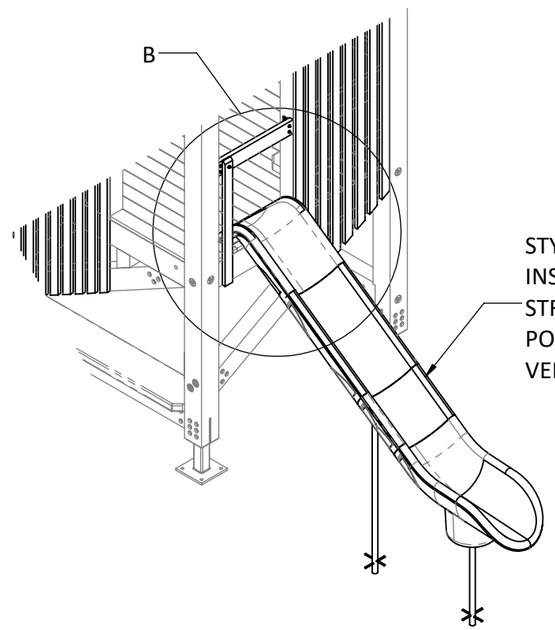

SAMPLE ISOMETRIC

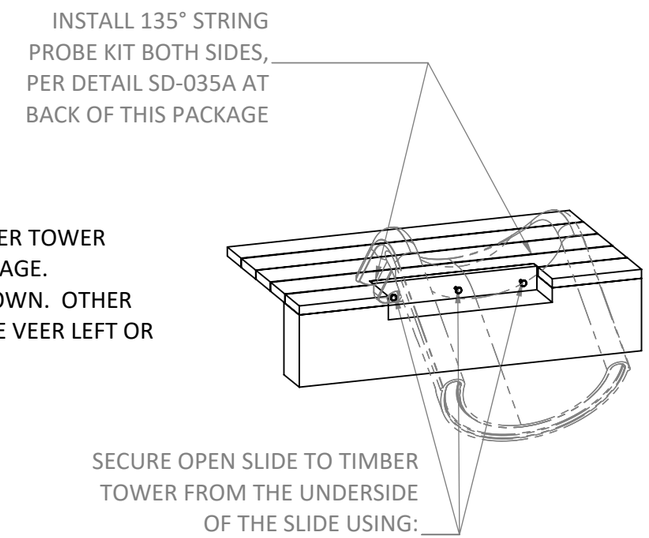

DETAIL B

PROPERTY OF EARTHSCAPE PLAY INC. - DO NOT COPY. DO NOT DISTRIBUTE.

SD-006

OPEN SLIDES - STARGLIDE

NOTES:

1. THIS CONNECTION DETAIL IS ONLY INTENDED TO SHOW AN ISOLATED SECTION. REFER TO THE APPROPRIATE DETAILS AS NOTED IN THE CONSTRUCTION DRAWINGS FOR ALL OTHER INFORMATION
2. IF SLIDE HEIGHT IS LESS THAN 1.2m [47.2"], EXIT HEIGHT MUST BE FROM 0-275mm [0-10.8"] ABOVE GRADE
3. IF SLIDE HEIGHT IS MORE THAN 1.2M [47.2"], EXIT HEIGHT MUST BE BETWEEN 175-380mm [6.9-15"] ABOVE GRADE
4. SLIDE EXIT HEIGHT TO BE SPECIFICALLY NOTED IN PROJECT INSTALLATION DRAWING

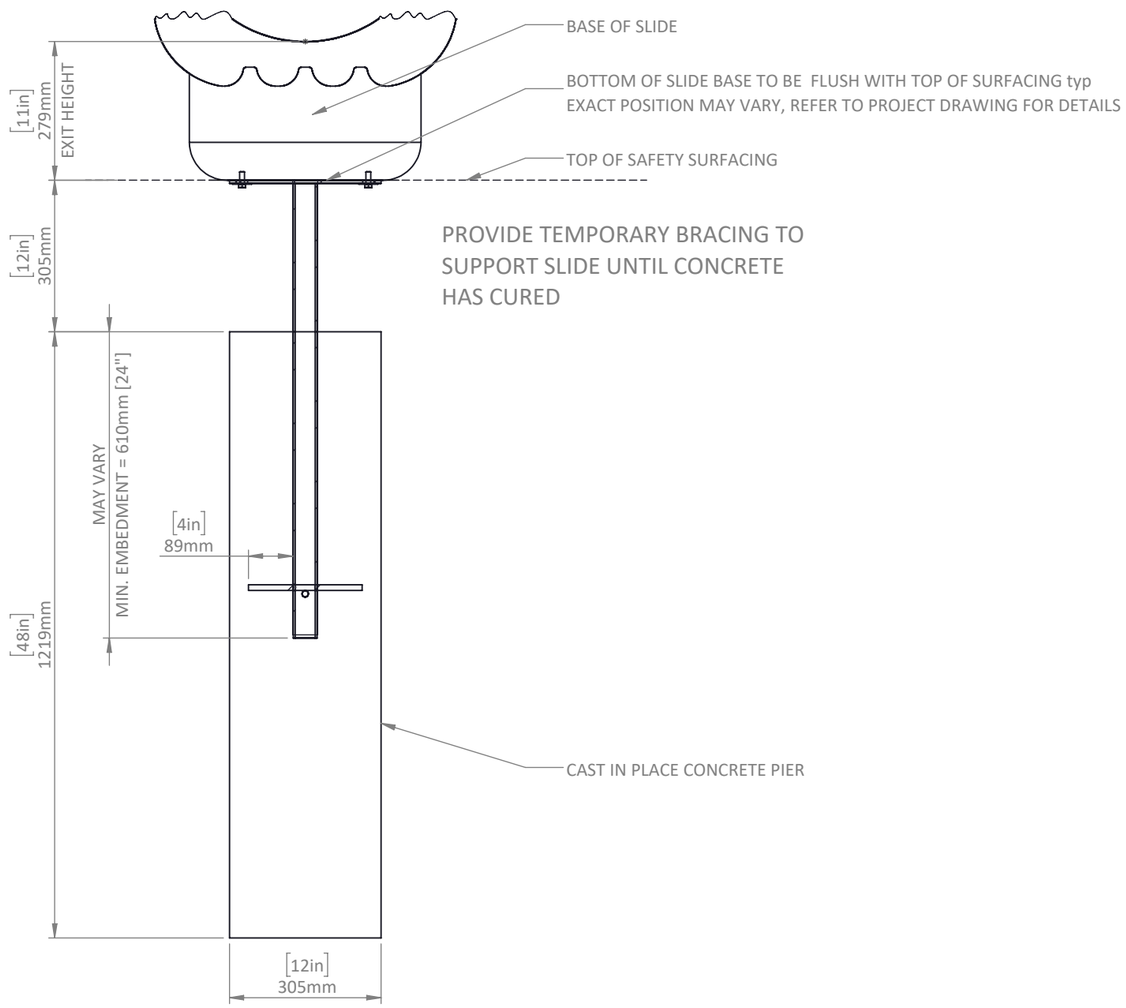

HARDWARE REFERENCE LIST

ITEM NO.	PartNo	DESCRIPTION	QTY.
1	B00047	Bracket Slide Footbuck	1
2	H30052	Washer 3/8" x 1-1/2" SS Fender	4
3	H10244	Hex Cap Screw 3/8-16 x 1 SS full thread	4

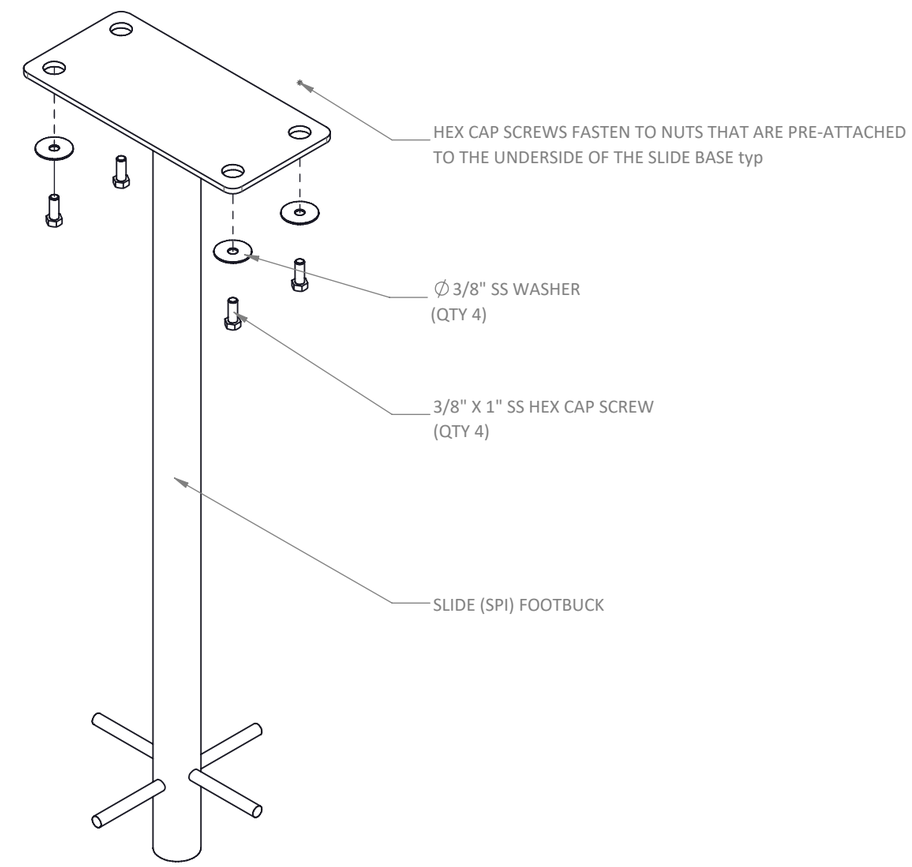

SLIDE (SPI) BASE BRACKET INSTALLATION

PROPERTY OF EARTHSCAPE PLAY INC. - DO NOT COPY. DO NOT DISTRIBUTE.

SD-007

OPEN SLIDES - STARGLIDE

IF REQUIRED, SLIDE POSTS TO BE CUT TO LENGTH ON SITE BY CONTRACTOR ONCE GRADE HAS BEEN ESTABLISHED
IF SLIDE HEIGHT IS LESS THAN 1.2m [47.2"], EXIT HEIGHT MUST BE FROM 0-275mm [0-10.8"] ABOVE GRADE
IF SLIDE HEIGHT IS MORE THAN 1.2M [47.2"], EXIT HEIGHT MUST BE BETWEEN 175-380mm [6.9-15"] ABOVE GRADE

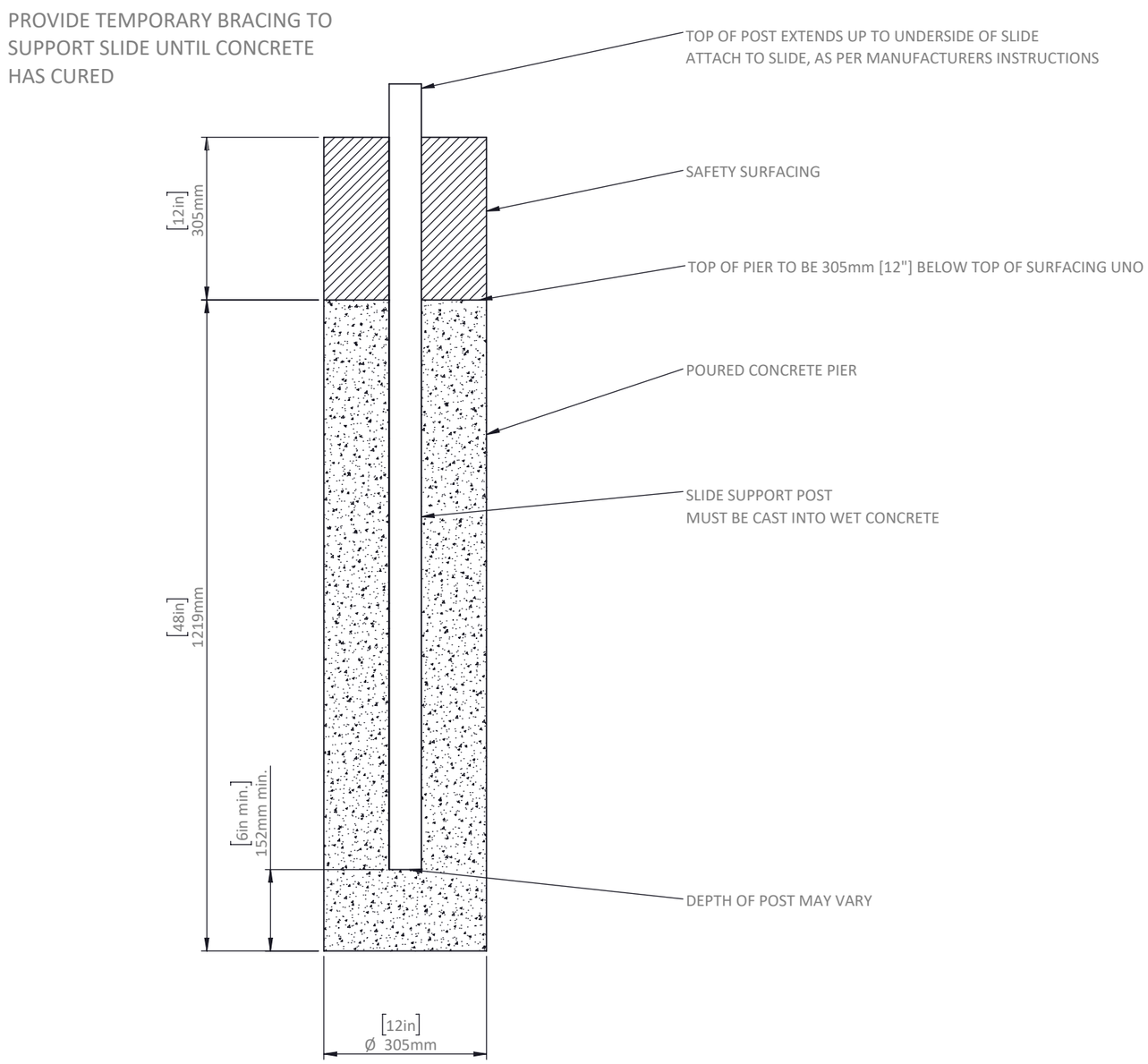

SLIDE SUPORT POST PIER INSTALLATION

PROPERTY OF EARTHSCAPE PLAY INC. - DO NOT COPY. DO NOT DISTRIBUTE.

SD-035A

OPEN SLIDES - STARGLIDE

NOTES:

1. REFER TO "GENERAL NOTES" SHEET FOR ALL GENERAL NOTES
2. THIS CONNECTION DETAIL IS ONLY INTENDED TO SHOW AN ISOLATED SECTION. REFER TO THE APPROPRIATE DETAILS AS NOTED IN THE INSTALLATION PACKAGE FOR ALL OTHER INFORMATION

B00002 KIT BOM			
ITEM NO.	PartNo	DESCRIPTION	QTY.
1	B00017	Bracket Slide String Probe 135°	2
2	H13225	Button Socket Head Cap Screw 3/8-16 x 1 SS	2
3	H16685	ASSY SK A2 8mm x 100mm SS	2
4	H30053	Washer 3/8" x 7/8" SS	2
5	H40071	Flat Rivet Nut 3/8"-16 SS	2
ITEMS BELOW ARE NOT SHOWN IN THIS DETAIL. THEY ARE USED FOR MOUNTING THE SLIDE BASE BRACKET. SEE SD-006 FOR MORE INFORMATION.			
6	H10244	Hex Cap Screw 3/8-16 x 1 SS full thread	4
7	H30052	Washer 3/8" x 1-1/2" SS Fender	4

*ONLY USE ONE KIT PER SLIDE

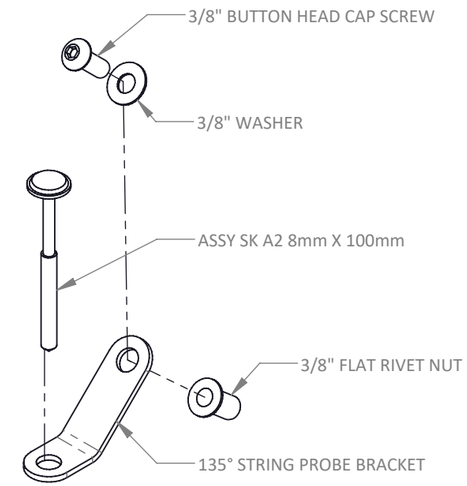

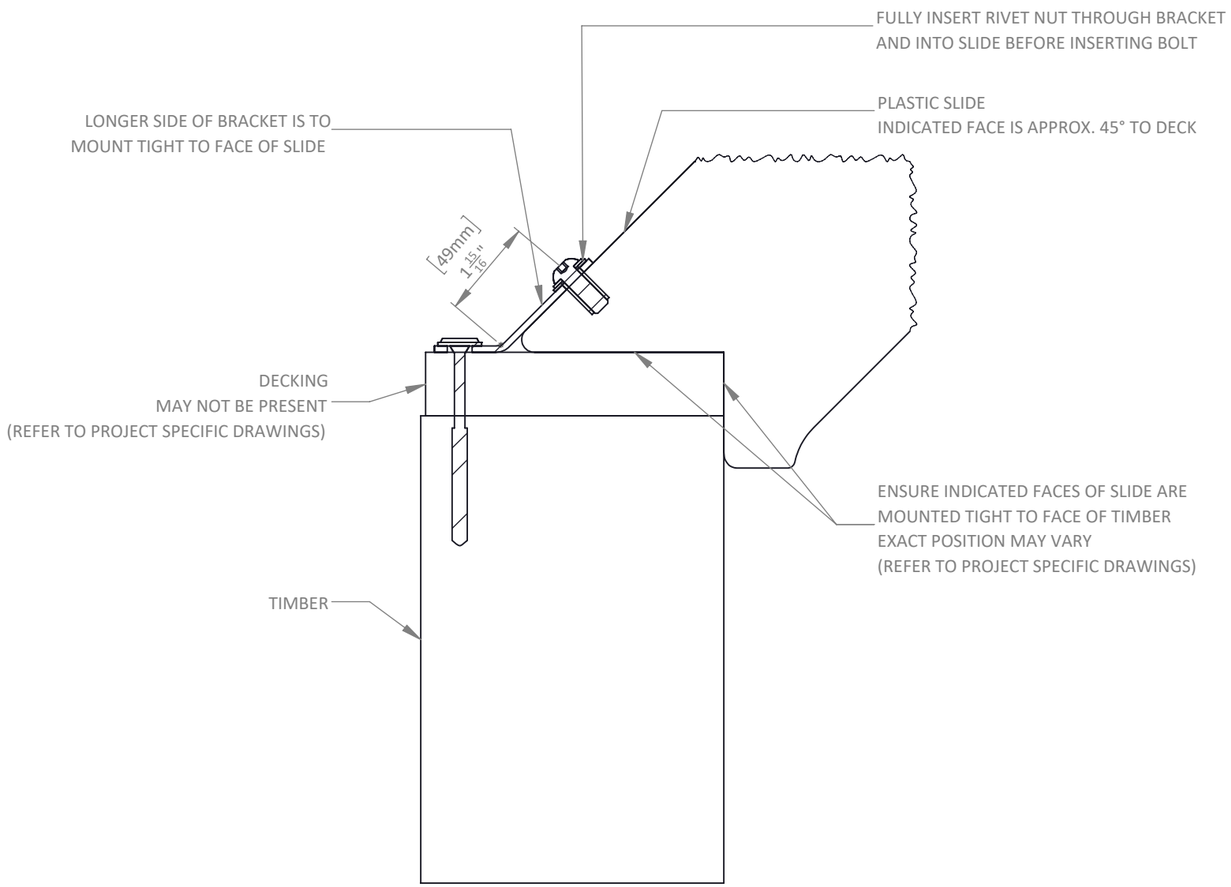

DETAIL A

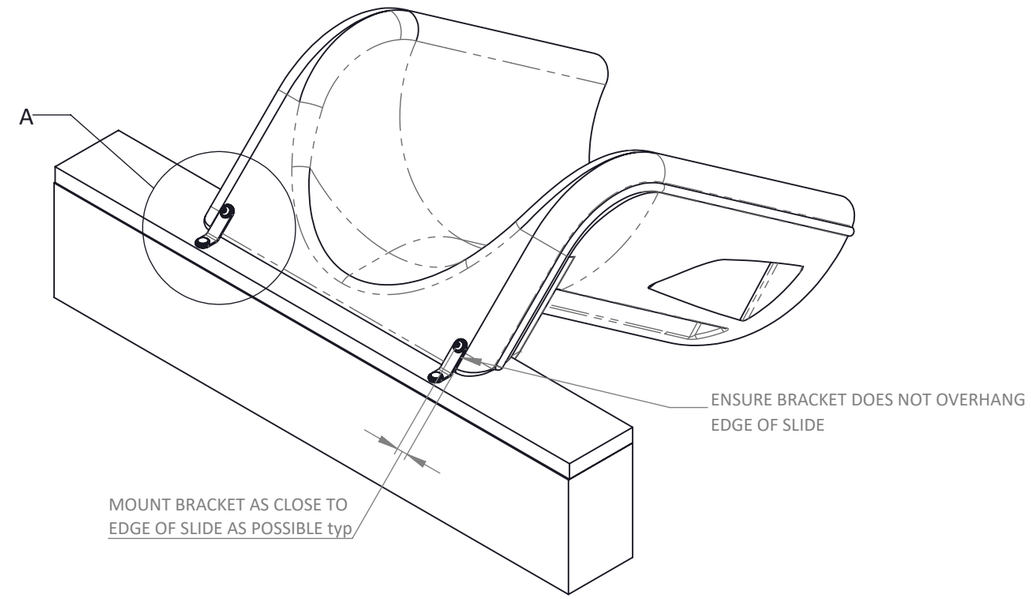

135° STRING PROBE BRACKET INSTALLATION

DATE DOCUMENT RELEASED 2021-09-06
DOCUMENT NUMBER: 1051525 - R4

PROPERTY OF EARTHSCAPE PLAY INC. - DO NOT COPY. DO NOT DISTRIBUTE.

INSTALLATION INSTRUCTIONS

EARTHSCAPE COLLECTIONS

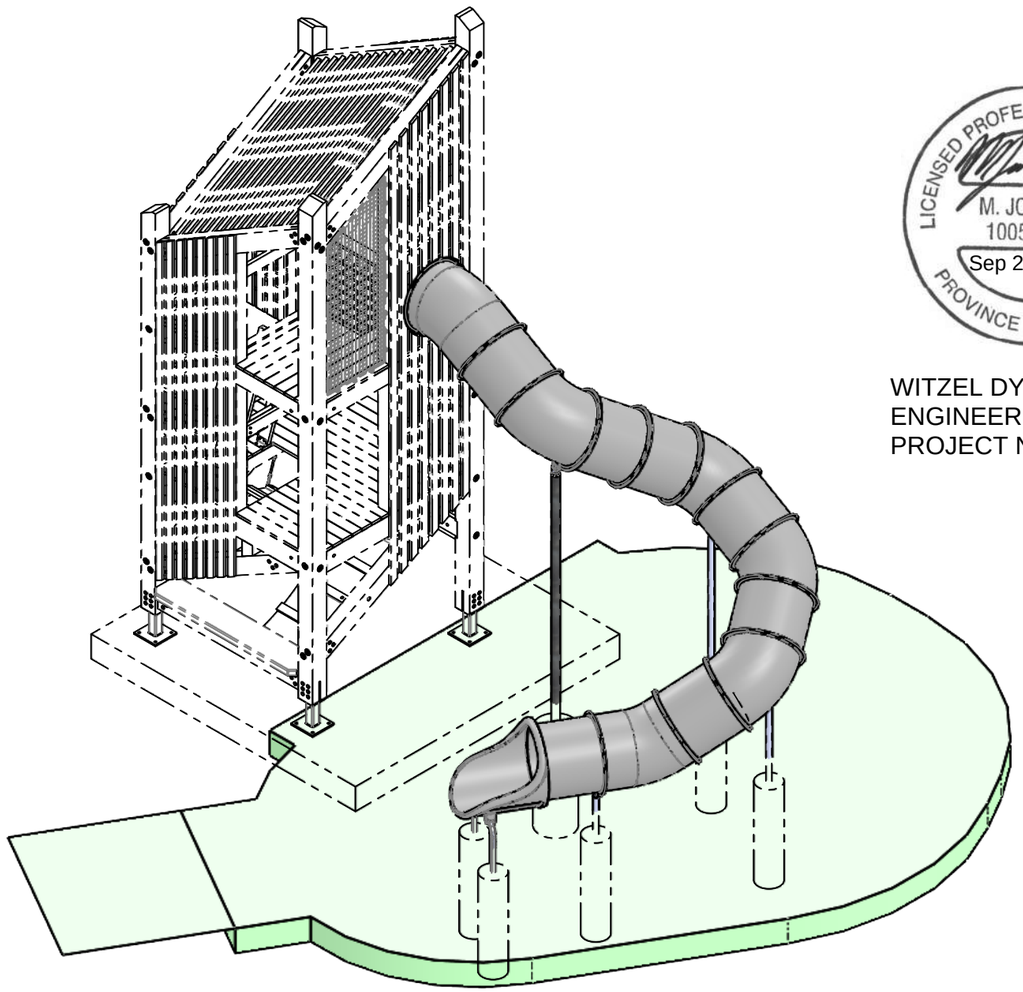

LICENSED PROFESSIONAL ENGINEER
M. JOHNSON
100514620
Sep 22, 2025
PROVINCE OF ONTARIO

WITZEL DYCE
ENGINEERING INC.
PROJECT NO.: 12936-165

PLASTIC TUBE SLIDE - FLANGE - 12' - TURN RIGHT

THESE INSTRUCTIONS APPLY TO THE FOLLOWING VERSIONS OF THIS PRODUCT:

F00316 - PLASTIC TUBE SLIDE - FLANGE - 12' - TURN RIGHT

WHICH IS DESIGNED TO BE INSTALLED ON THE FOLLOWING PRODUCTS:

F00407 - 2 LEVEL TIMBER TOWER
F00408 - 3 LEVEL TIMBER TOWER

NOTE: COLOURS SHOWN ARE REPRESENTATIONAL AND MAY NOT BE THE SAME AS THOSE OF THE SUPPLIED PRODUCT

FOR CSA AND ASTM SPECIFICATIONS AND GENERAL NOTES, SEE MAIN STRUCTURE INSTALLATION PACKAGE.

DATE DOCUMENT RELEASED 2022-11-09
DOCUMENT NUMBER: 1074101-R2

PROPERTY OF EARTHSCAPE PLAY INC. - DO NOT COPY. DO NOT DISTRIBUTE.

PLEASE READ ALL INSTRUCTIONS

Before starting to install this equipment be sure to read through and understand these instructions.

If you have any questions, contact your local dealer for assistance before proceeding.

MEASUREMENTS AND STANDARDS

Measurements have been provided in both metres and [feet-inches]. Ensure to follow standards noted for the location in which this play equipment is being installed. Those marked CSA are to be used in Canada and those marked ASTM to be used in the United States.

LIST OF ABBREVIATIONS

AYC = Alaskan Yellow Cedar
WRC = Western Red Cedar
DPS = Designated Play Surface
SS = Stainless Steel
HDG = Hot Dipped Galvanized
WWM = Welded Wire Mesh
TYP = Typical
C/W = Complete With
UNO = Unless Noted Otherwise
EWF = Engineered Wood Fiber
PIP = Poured-In-Place Rubber Surfacing
PT = Pressure Treated

TOOLS SUPPLIED WITH THIS PRODUCT

- T00047 - Tri Groove Drive (Fits 5/16", 3/8", 8mm AND 10mm)

TOOLS THE INSTALLER NEEDS TO SUPPLY

- High torque drill
- 1/2" impact driver
- Set of impact sockets - up to 1"
- 1/2" ratcheting socket wrench
- Set of hex keys
- Set of wood drill bits - up to 1/2"
- T25 drive bit
- T40 drive bit
- Angle grinder (with course 24 grit sanding disks and metal cut off disks)
- Transit or Laser Level
- Rigging and lifting straps

EQUIPMENT THE INSTALLER NEEDS TO SUPPLY

Machine to lift and position heaviest element.

- Site assembled slide +/- 250 kg [560 lbs]

Machine or scaffolding to allow installers to work safely at heights.

INSTALLER CREW AND TIME REQUIRED

Number of people needed: 2
Typical total person-hours to install: 24 + concrete cure time

Time breakdown:

- 2 hours x 2 people for excavation
- 7 hours x 2 people for onsite fabrication and play equipment installation
- 2 hours x 2 people for pouring concrete
- Time for concrete cure
- 1 hours x 2 people for temporary brace removal

MATERIALS THE INSTALLER NEEDS TO SUPPLY

- Threadmate threadlocker Vibra-Tite VC-3 (or equal)
- Concrete

WARNINGS

These instructions do not provide specific guidance on the use of tools or the lifting and moving heavy objects. It is assumed that competent people are installing this product who are familiar with using the tools and equipment required and are knowledgeable and skilled at lifting and positioning heavy objects.

PROPERTY OF EARTHSCAPE PLAY INC. - DO NOT COPY. DO NOT DISTRIBUTE.

SUPPLIED PARTS

PLASTIC TUBE SLIDE - FLANGE - 12' - TURN RIGHT

MAKE SURE YOU HAVE ALL THE PARTS

Examine the equipment and ensure you have all the required parts listed in the table below.

PART IMAGE	ITEM NO.	PART NO.	DESCRIPTION	QTY.
	1	H13224	BUTTON SOCKET HEAD CAP SCREW 3/8-16 X 7/8 SS	13
	2	H30053	WASHER 3/8" X 7/8" SS	13
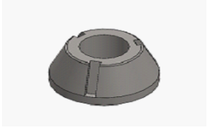	3	H40032	TRI-GROOVE NUT 3/8"-16	13
NO IMAGE PROVIDED	4	T00047	TRI GROOVE DRIVE (FITS 5/16", 3/8", 8mm AND 10mm)	1
SEE IMAGE THIS SHEET	5	SL0030	PLASTIC TUBE SLIDE - FLANGE - 12' - TURN RIGHT	1

IMAGES OF FASTENERS IN THIS TABLE ARE REPRESENTATIONAL TO HELP IDENTIFY PARTS.

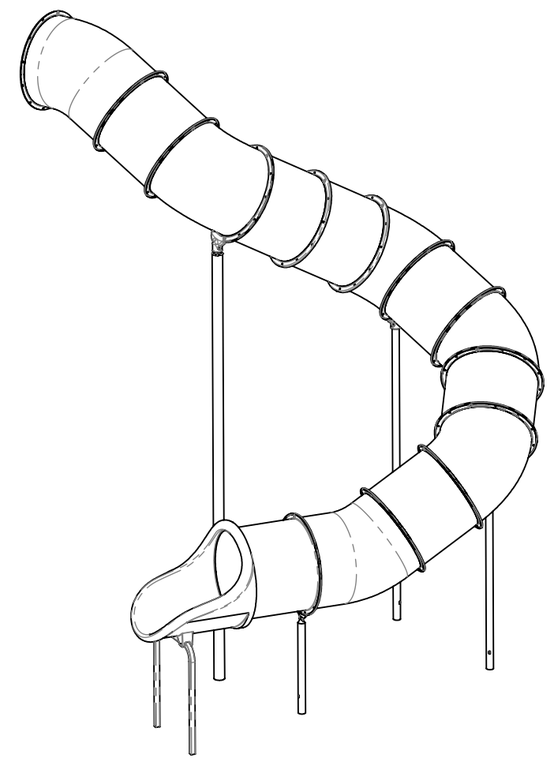

SL0030 - PLASTIC TUBE SLIDE - FLANGE - 12' - TURN RIGHT

(DOES NOT SHIP PRE-ASSEMBLED)

PROPERTY OF EARTHSCAPE PLAY INC. - DO NOT COPY. DO NOT DISTRIBUTE.

FINISHED PRODUCT

PLASTIC TUBE SLIDE - FLANGE - 12' - TURN RIGHT

WHAT THE FINISHED PRODUCT LOOKS LIKE

Finished play surface and concrete foundations by Installer.

The foundation design shown here might be different than what is shown in the main tower installation package. If any differences are noted, the main installation package shall take precedent over the details shown here.

The foundation detail provided in these instructions has been developed assuming typical soil conditions specified in general notes. If the subgrade encountered does not meet these conditions, the subgrade must be improved or revisions made to this detail. Revisions to the detail are the responsibility of the Installer and it is strongly recommended any changes be reviewed and approved by a registered engineer.

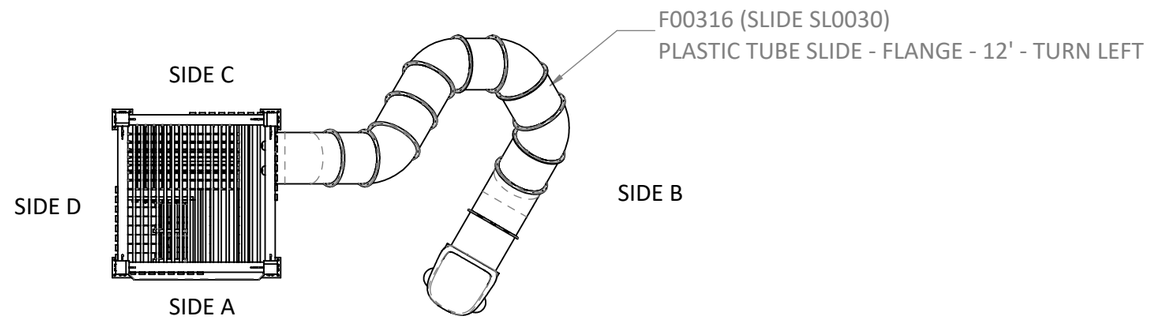

PLAN VIEW

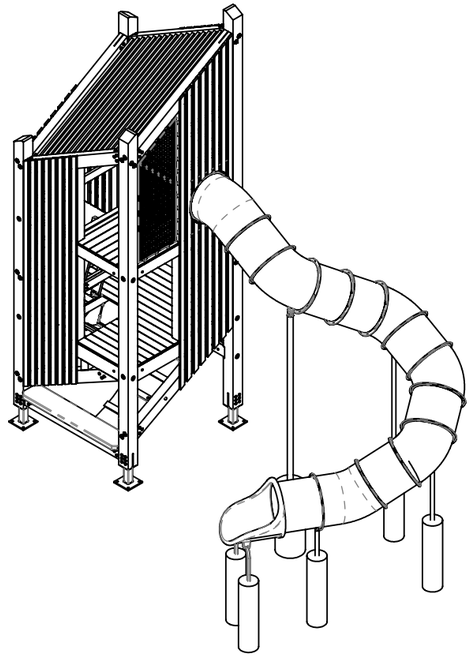

ISOMETRIC VIEW

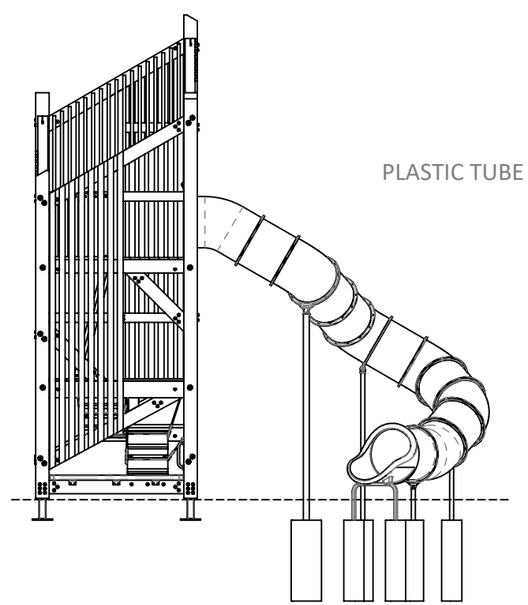

SIDE A ELEVATION

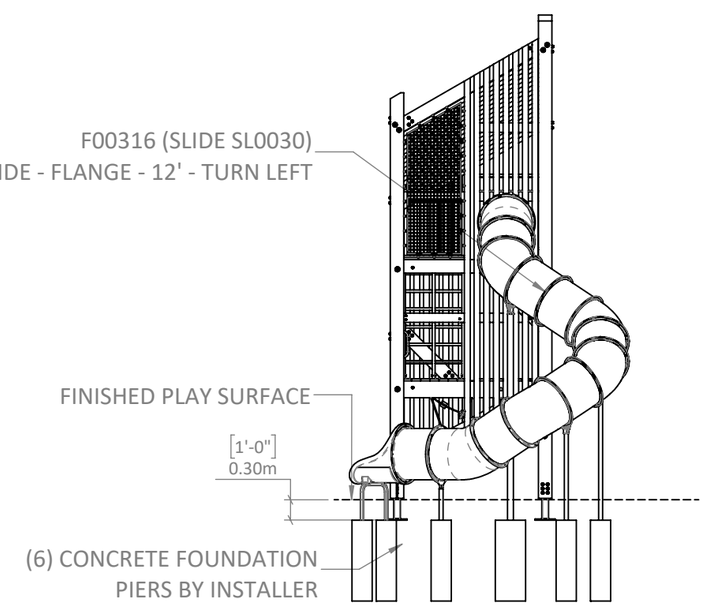

SIDE B ELEVATION

PROPERTY OF EARTHSCAPE PLAY INC. - DO NOT COPY. DO NOT DISTRIBUTE.

LOCATE PLAY EQUIPMENT

PLASTIC TUBE SLIDE - FLANGE - 12' - TURN RIGHT

STEP 1 - LOCATING THE EQUIPMENT ON SITE

Review the complete tower installation package to determine what the finished product should look like. The images shown in this package are representational and may not match your exact installation.

Ensure you know what the designed elevation is for the finished safety surface. All heights provided in these instructions will be relative to the finished play surface. The finished surface elevation is not within the scope of these instructions and should be provided by others.

THESE INSTRUCTIONS ARE BASED ON A STANDARD WHICH ASSUMES A LEVEL PLAYING SURFACE THAT IS 305mm (12") DEEP.

STEP 2 - LAYOUT SLIDE PIERS

Layout the centre of all slide piers using the pier layout plan and the pier location table this sheet. Use the corners of the tower post base brackets noted as reference points in the complete tower installation package.

STEP 3 - AUGER HOLES

Auger all slide pier holes as per Typical Augered Pier detail this sheet as per the diameter noted in Pier Layout Table this sheet. Note depth of augured hole provided from the standard **finished play surface grade**. Finished grades are not within the scope of these instructions and should be provided by others.

SLIDE SUPPORT POSTS TO BE CAST IN PLACE DURING INSTALLATION.

DO NOT POUR CONCRETE YET.

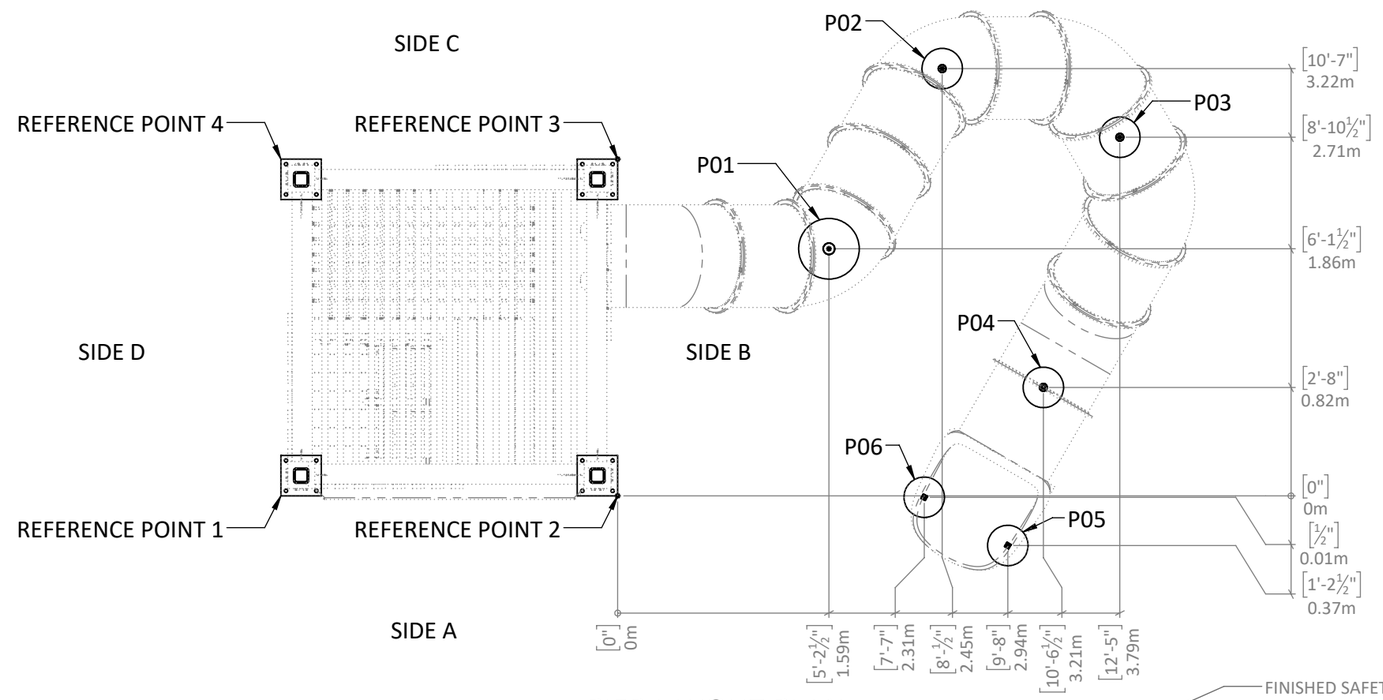

PIER LAYOUT PLAN

PIER LAYOUT TABLE			
PIER I.D.	RAY FROM REF. POINT 2	RAY FROM REF. POINT 3	PIER DIAMETER
P01	[8'-½"] 2.45m	[5'-8"] 1.73m	[1'-6"] ∅0.46m
P02	[13'-3½"] 4.05m	[8'-4"] 2.54m	[1'-0"] ∅0.30m
P03	[15'-3"] 4.65m	[12'-5½"] 3.79m	[1'-0"] ∅0.30m
P04	[10'-10½"] 3.31m	[11'-11½"] 3.64m	[1'-0"] ∅0.30m
P05	[9'-9"] 2.97m	[13'-7"] 4.14m	[1'-0"] ∅0.30m
P06	[7'-7"] 2.31m	[11'-3½"] 3.44m	[1'-0"] ∅0.30m

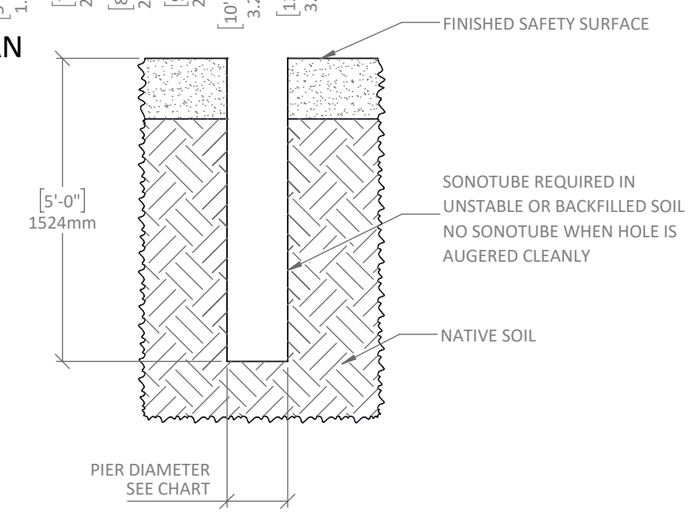

TYPICAL AUGERED PIER

PROPERTY OF EARTHSCAPE PLAY INC. - DO NOT COPY. DO NOT DISTRIBUTE.

SLIDE ENTRANCE

PLASTIC TUBE SLIDE - FLANGE - 12' - TURN RIGHT

STEP 4 - PREP TOWER FOR TUBE SLIDE INSTALL

Temporarily remove tread from wooden step from inside of tower at entrance to slide as shown in Inside View. Save screws

STEP 5 - INSTALL TUBE SLIDE ENTRANCE SECTION

Position the slide entrance section as shown in Slide Entrance Section View and Slide Entrance Elevation View this sheet.

Secure the tube slide entrance section to the steel panel already mounted on the timber tower as per Detail B.

Reinstall tread for wooden step inside the tower.

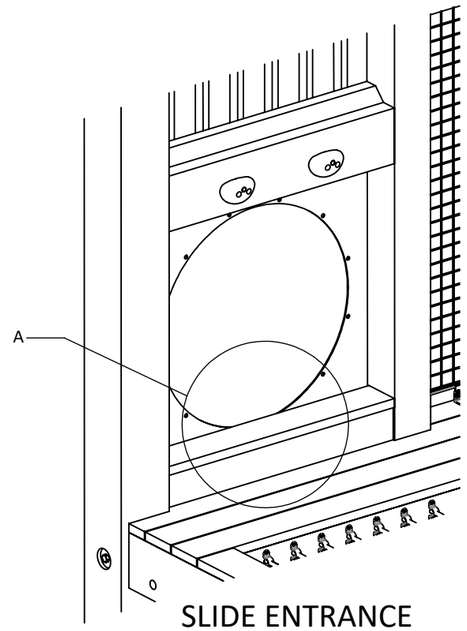

SLIDE ENTRANCE
INSIDE VIEW

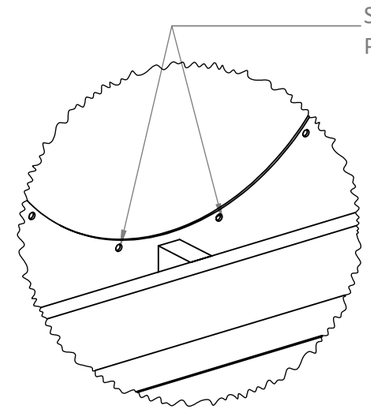

DETAIL A

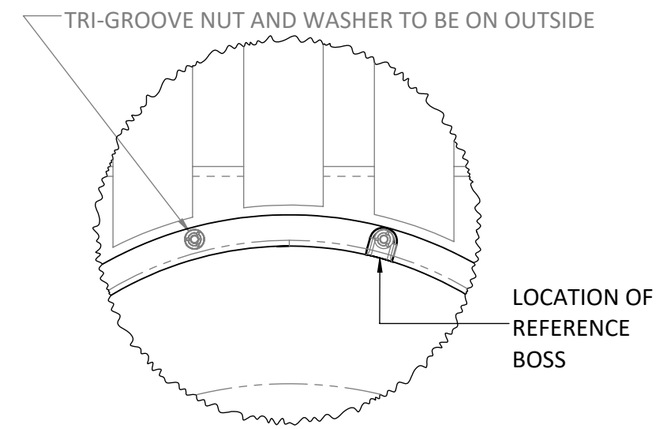

DETAIL B

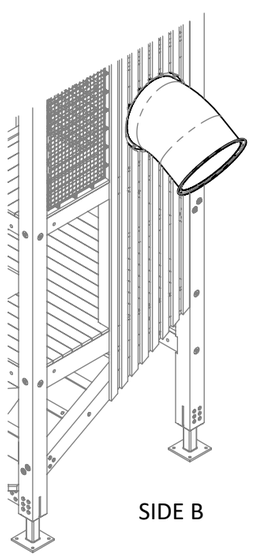

ISOMETRIC VIEW

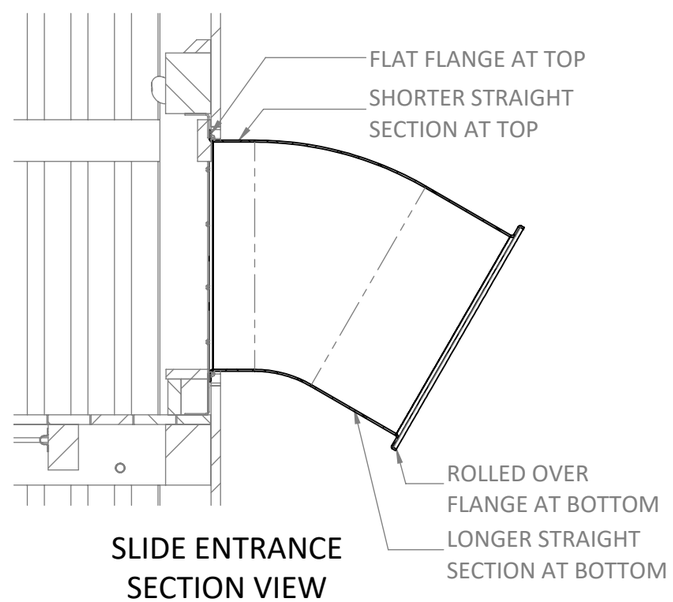

SLIDE ENTRANCE
SECTION VIEW

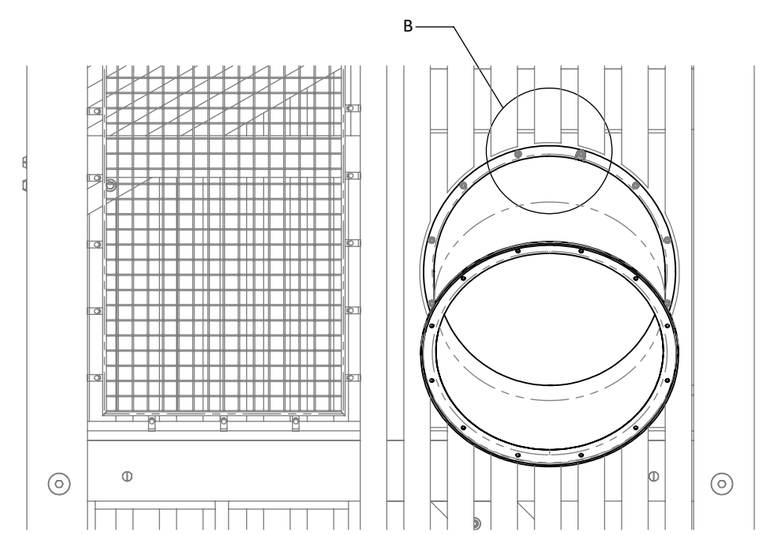

SLIDE ENTRANCE
ELEVATION VIEW

PROPERTY OF EARTHSCAPE PLAY INC. - DO NOT COPY. DO NOT DISTRIBUTE.

ASSEMBLE SLIDE

PLASTIC TUBE SLIDE - FLANGE - 12' - TURN RIGHT

STEP 6 - ASSEMBLE REMAINDER OF TUBE SLIDE

Complete the assembly and installation of the slide in the order noted on the Slide Master Layout this sheet working from the entrance of the slide to the exit.

Tube sections should be rotated so the reference bosses aligns from one section to the next except for slide exit pieces. See slide exit detail next sheet.

Refer to chart on this sheet that matches Earthscape part numbers to the slide manufacturer part numbers and the manufacturer's assembly/installation package numbers. Refer to slide manufacturer's assembly/installation package for more information.

Provide temporary support for the slide as it's being assembled. Once entire slide assembled, support post will be added. See next sheet.

Do not pour concrete piers at this time.

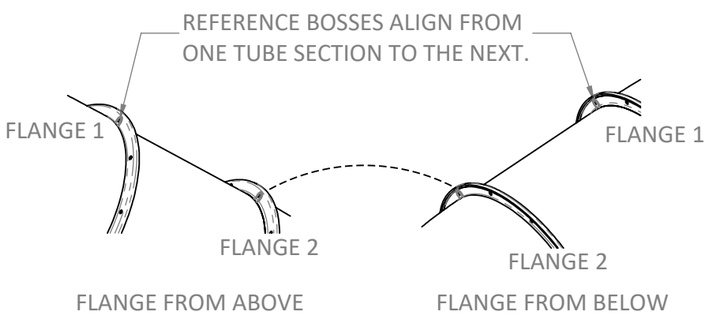

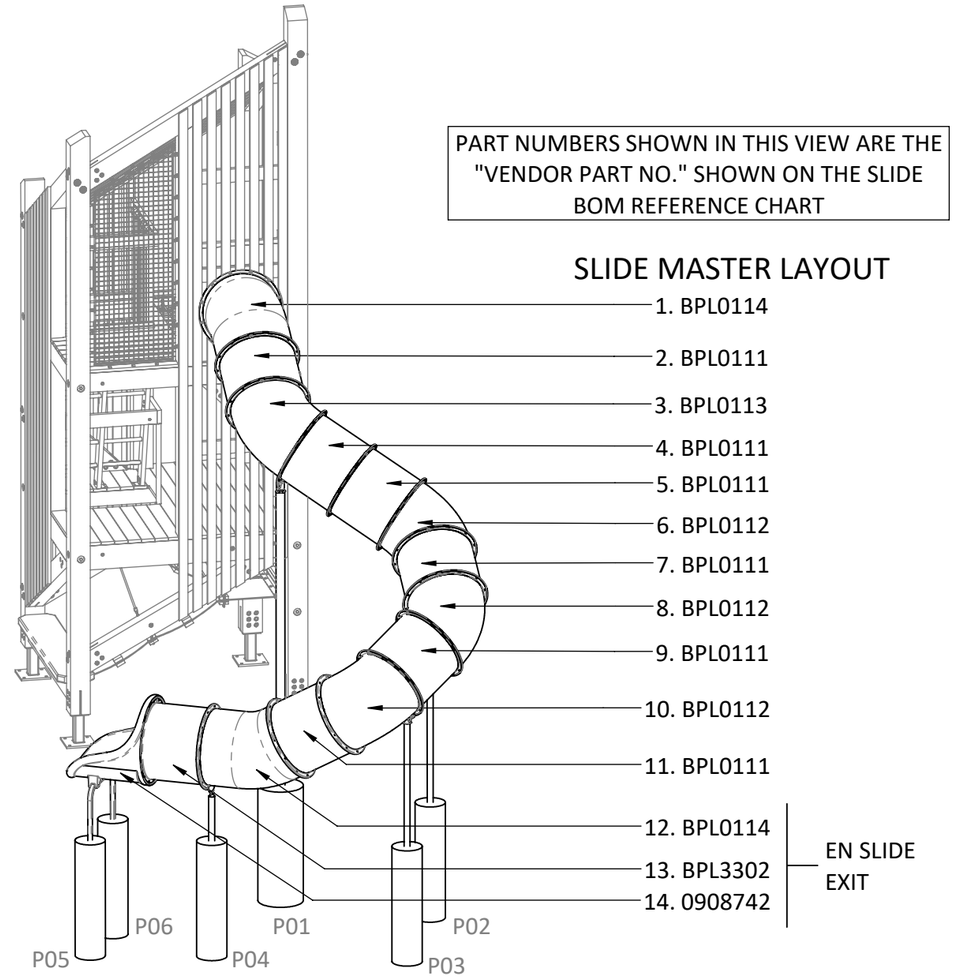

SLIDE BOM REFERENCE CHART				
EARTHSCAPE PART NO.	VENDOR PART NO.	VENDOR ASM NO.	DESCRIPTION	QTY.
SL3001	(2X) BPL0114 + (1X) BPL3302 + (1X) 0908742	ZZYYA846	CUSTOM SLIDE ENTRANCE WITH EN SLIDE EXIT - IN GROUND	1
SL3002	BPL0111	ZZUN3007	30" ROUND STRAIGHT TUBE SECTION	6
SL3004	BPL0113	ZZUN3008	30" ROUND LEFT TUBE SECTION	1
SL3005	BPL0112	ZZUN3009	30" ROUND RIGHT TUBE SECTION	3
SL3000		ZZUN3011	DO NOT CLIMB - SLIDE PANEL	1
SL3007		ZZUN3036	3FT ROUND TUBE SLIDE SUPPORT LEG - IN GROUND	1
SL3010		ZZUN3027	6FT ROUND TUBE SLIDE SUPPORT LEG - IN GROUND	1
SL3013		ZZUN3024	9FT TUBE SLIDE SUPPORT LEG - IN GROUND	1

REFER TO SLIDE MANUFACTURER'S INSTALLATION INSTRUCTIONS WHICH REFERNCE THE VENDOR ASM NO.

PROPERTY OF EARTHSCAPE PLAY INC. - DO NOT COPY. DO NOT DISTRIBUTE.

INSTALL SUPPORT POSTS

PLASTIC TUBE SLIDE - FLANGE - 12' - TURN RIGHT

STEP 6 - INSTALL SUPPORT POSTS

Secure the slide support posts to the slide with the bottom of the posts hanging in the augered holes. Support post installation as per slide manufacturer's details.

Refer to chart on the previous sheet that matches Earthscape part numbers to the slide manufacturer's assembly/installation package numbers.

Finished grade labels on support posts may be wrong. Correct heights noted on this sheet.

Do not pour concrete at this time.

STEP 7 - CHECK POSTS AND ADJUST HEIGHTS

Once all supports posts are hanging from the slide, confirm slide position by checking that all support posts are centered in the augered pier holes. Adjust slide position as needed.

With all support posts attached to the slide, adjust the temporary bracing so the support post heights match the dimensions provided on this sheet.

Slide exit height should be approximately 0.28m - 0.30m [11"-12"] above the finished play surface.

Ensure slide exit is sloped to drain water.

Pour concrete piers.

STEP 8 - REMOVE TEMPORARY SUPPORTS

Once concrete has cured remove the temporary supports.

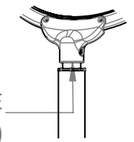

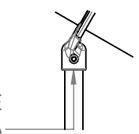

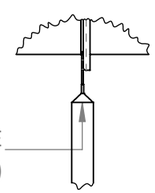

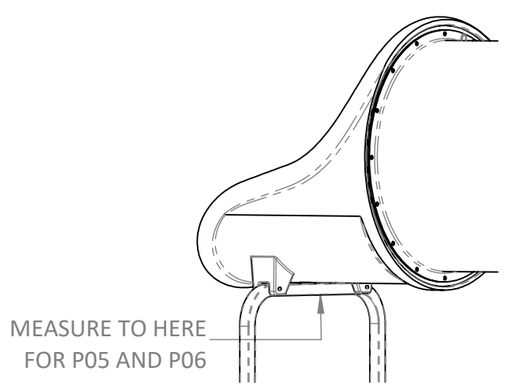

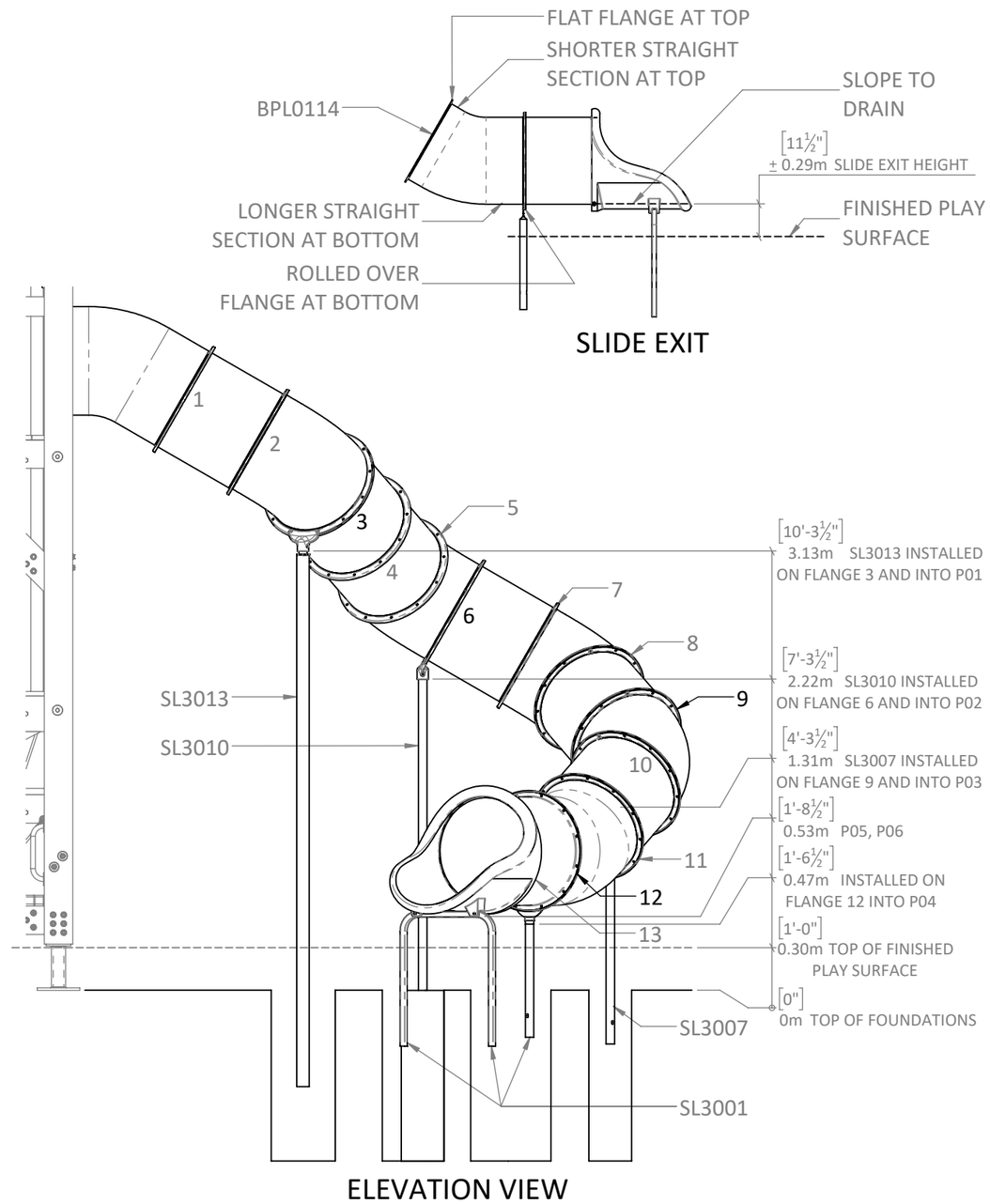

PROPERTY OF EARTHSCAPE PLAY INC. - DO NOT COPY. DO NOT DISTRIBUTE.

INSTALLATION INSTRUCTIONS

EARTHSCAPE COLLECTIONS

WITZEL DYCE
ENGINEERING INC.
PROJECT NO.: 12936-165

LICENSED PROFESSIONAL ENGINEER
M. JOHNSON
100514620
Sep 22, 2025
PROVINCE OF ONTARIO

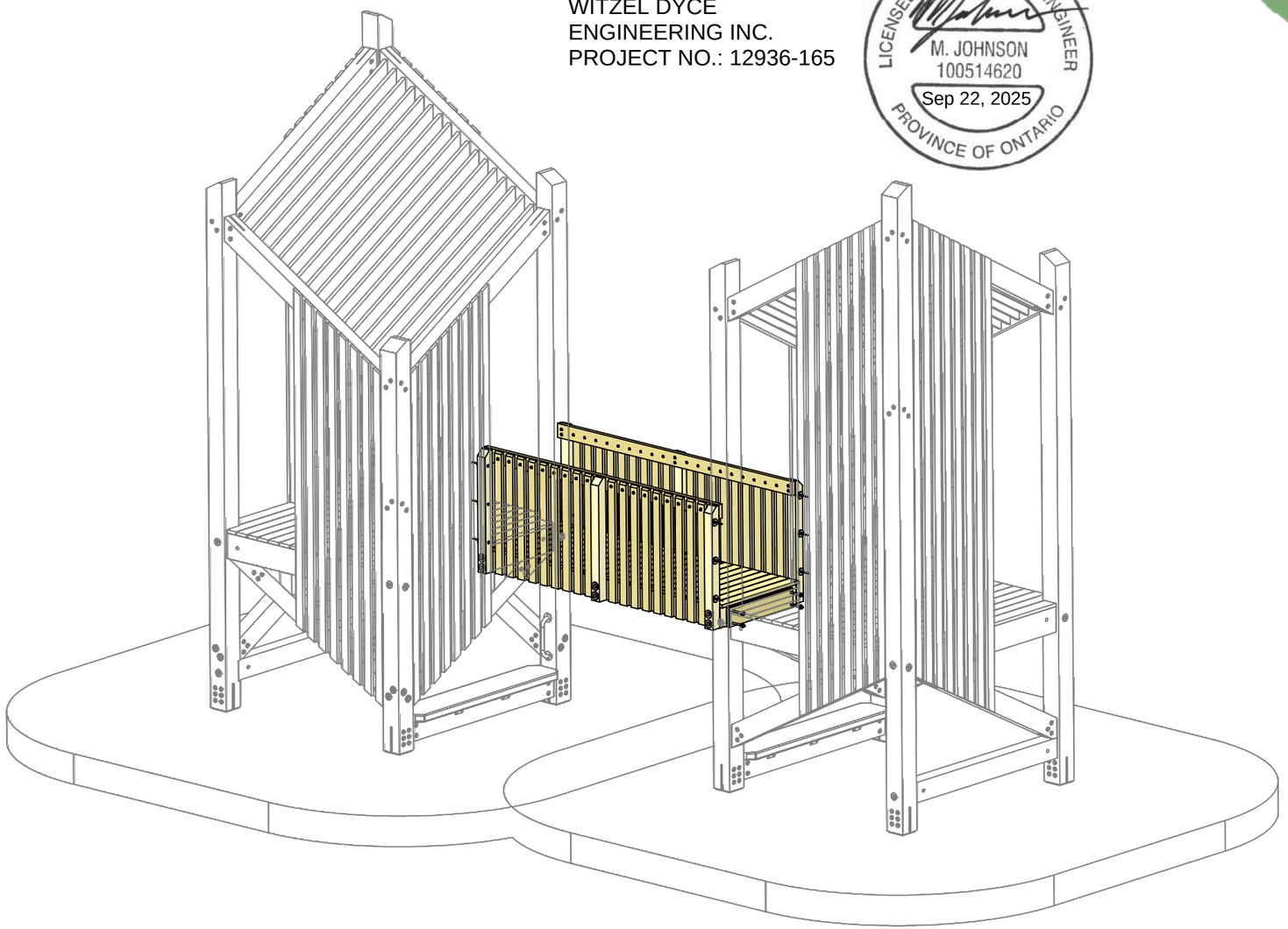

10' WOODEN BRIDGE

THESE INSTRUCTIONS APPLY TO THE FOLLOWING VERSIONS OF THIS PRODUCT:

F00363 - 10' WOODEN BRIDGE

WHICH IS DESIGNED TO BE INSTALLED ON THE FOLLOWING PRODUCTS:

F00182 - 2 LEVEL TIMBER TOWER
F00185 - 1 LEVEL TIMBER TOWER
F00407 - 2 LEVEL TIMBER TOWER
F00408 - 3 LEVEL TIMBER TOWER

NOTE: COLOURS SHOWN ARE REPRESENTATIONAL AND MAY NOT BE THE SAME AS THOSE OF THE SUPPLIED PRODUCT

FOR CSA AND ASTM SPECIFICATIONS AND GENERAL NOTES SEE MAIN STRUCTURE INSTALLATION PACKAGE

DATE DOCUMENT RELEASED 2022-05-30
DOCUMENT NUMBER: 1073001-R1

PROPERTY OF EARTHSCAPE PLAY INC. - DO NOT COPY. DO NOT DISTRIBUTE.

PLEASE READ ALL INSTRUCTIONS

Before starting to install this equipment be sure to read through and understand these instructions.

If you have any questions, contact your local dealer for assistance before proceeding.

MEASUREMENTS AND STANDARDS

Measurements have been provided in both metres and [feet-inches]. Ensure to follow standards noted for the location in which this play equipment is being installed. Those marked CSA are to be used in Canada and those marked ASTM to be used in the United States.

LIST OF ABBREVIATIONS

AYC = Alaskan Yellow Cedar
WRC = Western Red Cedar
DPS = Designated Play Surface
SS = Stainless Steel
HDG = Hot Dipped Galvanized
WWM = Welded Wire Mesh
TYP = Typical
C/W = Complete With
UNO = Unless Noted Otherwise
EWF = Engineered Wood Fiber
PIP = Poured-In-Place Rubber Surfacing
PT = Pressure Treated

TOOLS SUPPLIED WITH THIS PRODUCT

- No tools supplied

TOOLS THE INSTALLER NEEDS TO SUPPLY

- High torque drill
- Set of wood drill bits up to 1/2"
- T25 drive bit
- T40 drive bit
- Circular saw
- Transit or laser Level
- Rigging and lifting straps

EQUIPMENT THE INSTALLER NEEDS TO SUPPLY

- Machine to lift and position 300 kg [670 lb] pre-assembled wooden bridge.

INSTALLER CREW AND TIME REQUIRED

Number of people needed: 3
Typical total person-hours to install: 3

Time breakdown:
- 1 hours x 3 people to position and anchor the bridge in place

MATERIALS THE INSTALLER NEEDS TO SUPPLY

- No additional materails required

WARNINGS

These instructions do not provide specific guidance on the use of tools or the lifting and moving heavy objects. It is assumed that competent people are installing this product who are familiar with using the tools and equipment required and are knowledgeable and skilled at lifting and positioning heavy objects.

PROPERTY OF EARTHSCAPE PLAY INC. - DO NOT COPY. DO NOT DISTRIBUTE.

MAKE SURE YOU HAVE ALL THE PARTS

Examine the equipment and ensure you have all the required parts listed in the table below.

PART IMAGE	ITEM NO.	PART NO.	DESCRIPTION	QTY.
	1	H16687	ASSY SK A2 8mm X 200mm SS	12
	2	H16685	ASSY SK A2 8mm X 100mm SS	8
SEE IMAGE THIS SHEET	3	F00363	PRE-ASSEMBLED WOODEN BRIDGE 10'	1

IMAGES OF FASTENERS IN THIS TABLE ARE REPRESENTATIONAL TO HELP IDENTIFY PARTS.

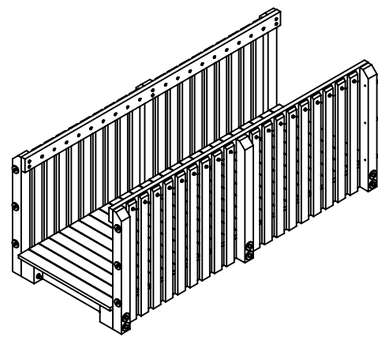

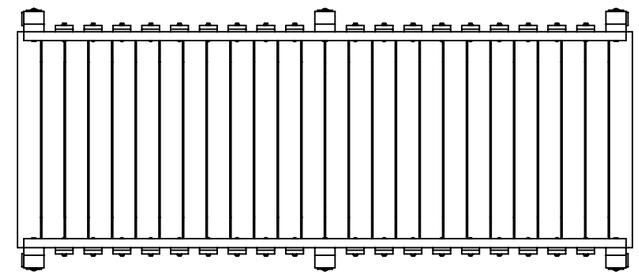

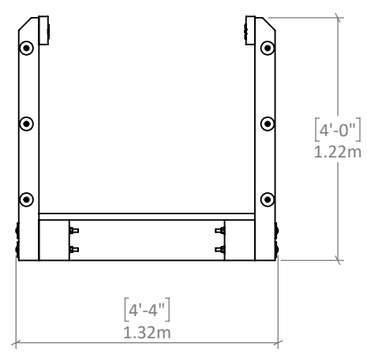

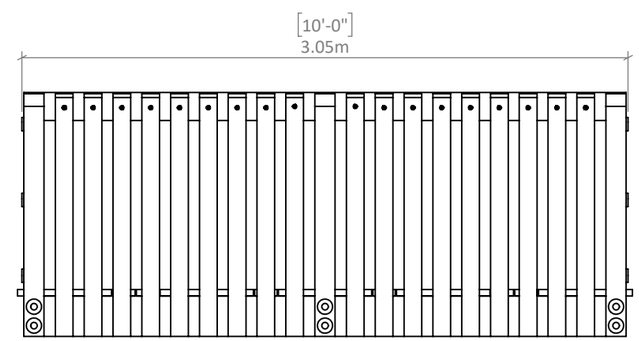

TIMBER BRIDGE SHIPPED PRE-ASSEMBLED AS SHOWN

PROPERTY OF EARTHSCAPE PLAY INC. - DO NOT COPY. DO NOT DISTRIBUTE.

STEP 1 - CONFIRM WHERE THE ACCESSORY IS TO BE INSTALLED

Review the complete tower installation package to determine on which side this accessory is to be installed and what the finished product should look like. The images shown on this page are representational and may not match your exact installation.

STEP 2 - INSTALL BRIDGE PRIOR TO ANCHORING TOWERS TO FOUNDATION PAD.

It might be necessary to make minor adjustments the position of the timber towers to suit the as-built bridge. Anchors towers after bridge has been installed.

STEP 3 - PREP BRIDGE AND CONFIRM GAP BETWEEN TOWERS IS SLIGHTLY LARGER THEN THE BRIDGE IS LONG.

Temporarily remove the end deckboard from both ends of bridge as per Figure 1. Make sure to note which end they came from and their orientation.

Measure distance between towers and compare to supplied bridge length. Pull towers away from each other enough to be able to fit bridge between.

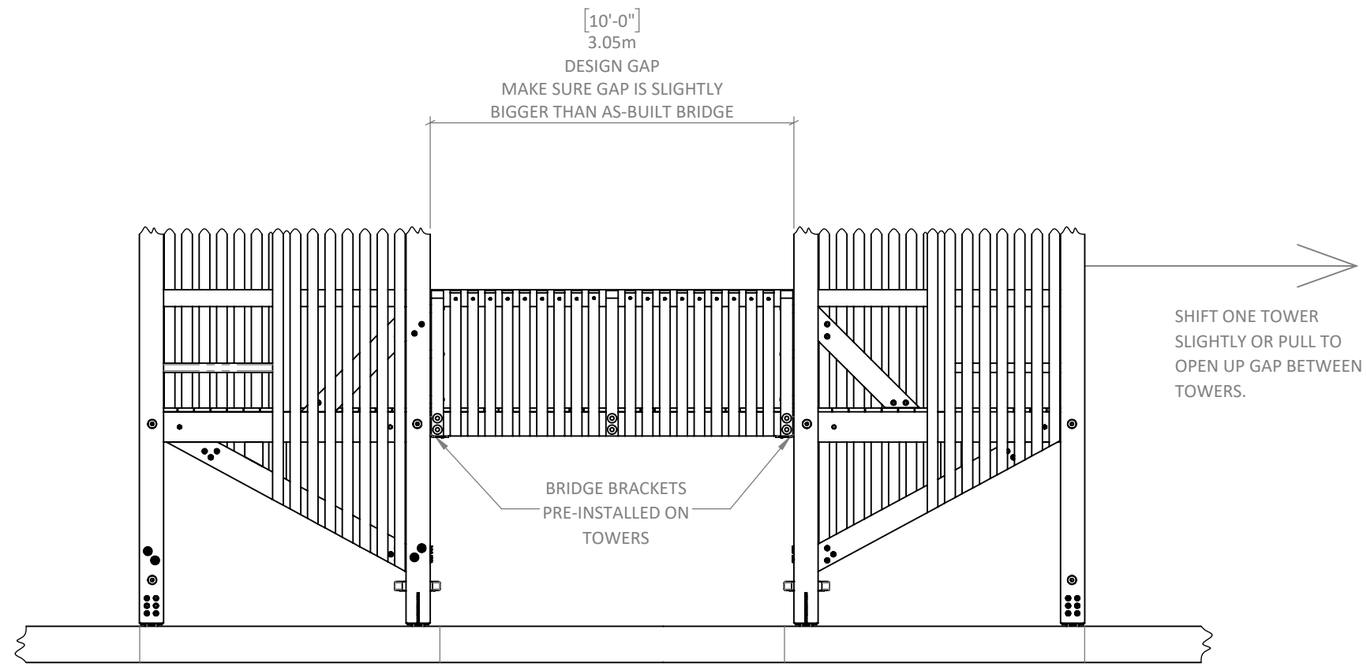

SAMPLE ELEVATION

(ACTUAL INSTALLATION MIGHT DIFFER FROM THIS VIEW. CHECK MAIN INSTALLTION PACKAGE TO SEE PORJECT SPECIFIC ARRANGMENT OF BRIDGE AND TOWERS

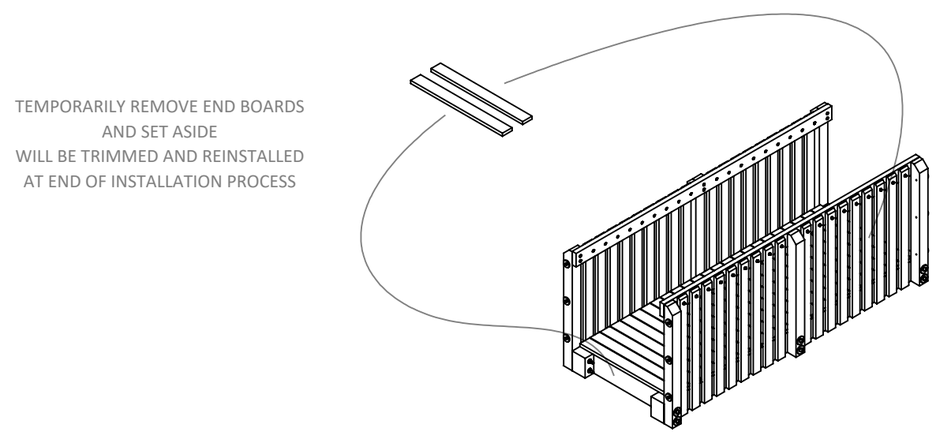

FIGURE 1

PROPERTY OF EARTHSCAPE PLAY INC. - DO NOT COPY. DO NOT DISTRIBUTE.

BRIDGE INSTALLATION 2 OF 3

10' WOODEN BRIDGE

STEP 4 - LIFT AND PLACE BRIDGE

Lift bridge with apporpriate equipment and move into position.
Lower bridge on to the 2 brackets pre-installed on the timber towers ensuring the bridge is centered in the tower opening.

STEP 5 - ADJUST POSITION OF TOWERS

Draw towers together so they are tight to the ends of the bridge.
Make minor adjustments to tower position to ensure both ends of bridge are centered in tower opening and that towers are tight to the end of the bridge.

STEP 6 - SECURE BRIDGE GUARDRAIL POSTS

Install screws through pre-dilled holes in end guardrail posts into timber tower posts.

Pre-drill all screw holes as per general notes.

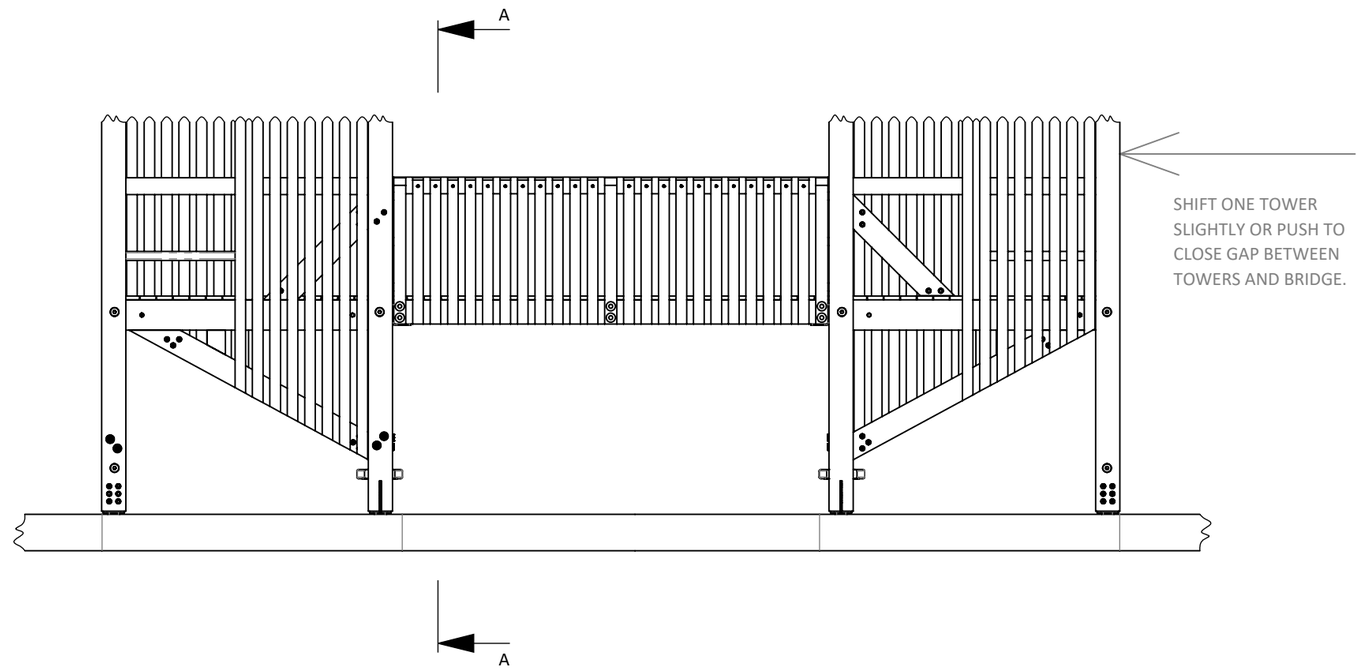

SAMPLE ELEVATION

(ACTUAL INSTALLATION MIGHT DIFFER FROM THIS VIEW. CHECK MAIN INSTALLTION PACKAGE TO SEE PORJECT SPECIFIC ARRANGMENT OF BRIDGE AND TOWERS

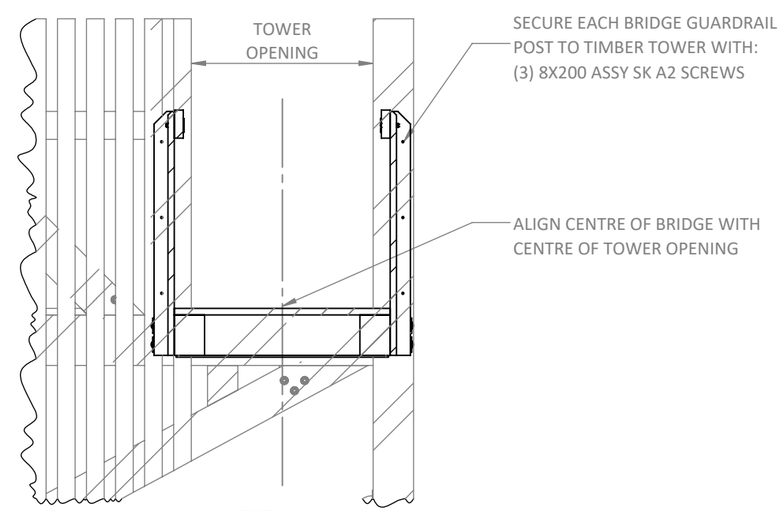

SECTION A-A

PROPERTY OF EARTHSCAPE PLAY INC. - DO NOT COPY. DO NOT DISTRIBUTE.

STEP 7 - SECURE BRIDGE STRINGERS

Install screws through bottom of steel brackets into underside of bridge timber stringers.

Pre-drill all screw holes as per general notes.

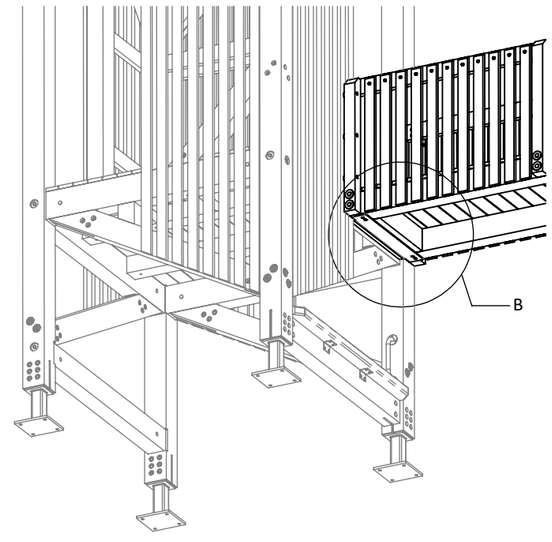

LOOKING UNDER BRIDGE

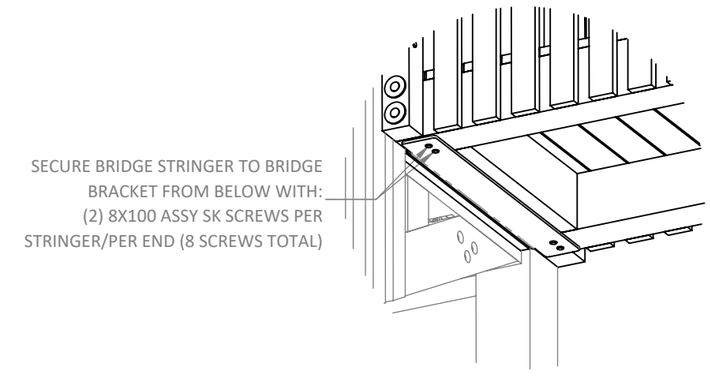

DETAIL B

STEP 8 - REINSTALL DECKBOARDS

Trim the removed deckboards to suit the gap in decking between the bridge and tower.

Ensure a +/-6mm (1/4") gap between deckboards as per Figure 2. Deckboards must not touch. Reinstall with the original screws.

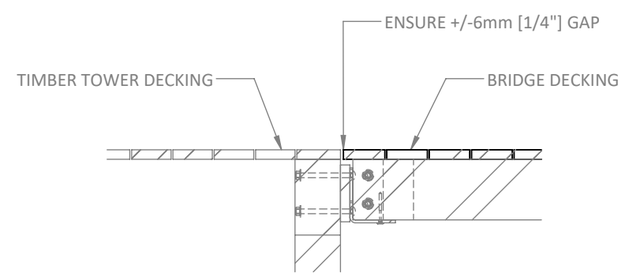

FIGURE 2

PROPERTY OF EARTHSCAPE PLAY INC. - DO NOT COPY. DO NOT DISTRIBUTE.

INSTALLATION INSTRUCTIONS

EARTHSCAPE COLLECTIONS

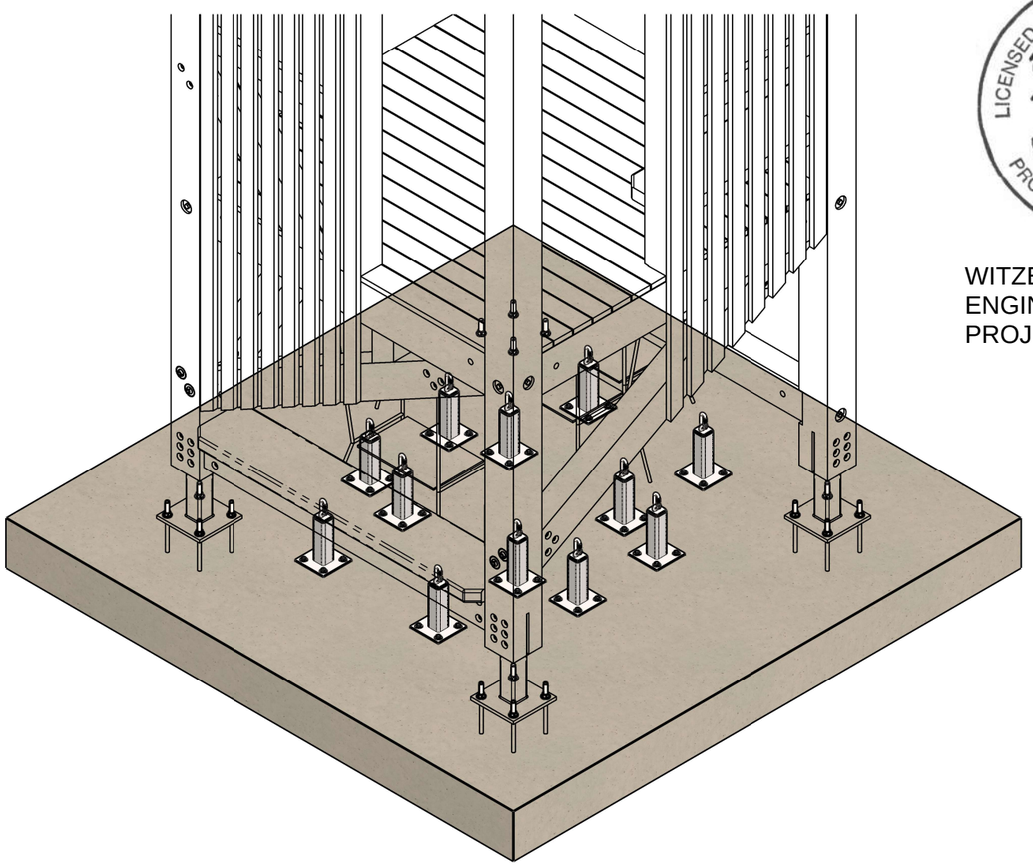

WITZEL DYCE
ENGINEERING INC.
PROJECT NO.: 12936-165

SLING SEATS - PIP

THESE INSTRUCTIONS APPLY TO THE FOLLOWING VERSIONS OF THIS PRODUCT:

F00403 - SLING SEATS - PIP

NOTE: COLOURS SHOWN ARE REPRESENTATIONAL AND MAY NOT BE THE SAME AS THOSE OF THE SUPPLIED PRODUCT

DATE DOCUMENT RELEASED 2022-06-05
DOCUMENT NUMBER: 1073938-R1

PROPERTY OF EARTHSCAPE PLAY INC. - DO NOT COPY. DO NOT DISTRIBUTE.

PLEASE READ ALL INSTRUCTIONS

Before starting to install this equipment be sure to read through and understand these instructions.

If you have any questions, contact your local dealer for assistance before proceeding.

MEASUREMENTS AND STANDARDS

Measurements have been provided in both metres and [feet-inches]. Ensure to follow standards noted for the location in which this play equipment is being installed. Those marked CSA are to be used in Canada and those marked ASTM to be used in the United States.

LIST OF ABBREVIATIONS

AYC = Alaskan Yellow Cedar
WRC = Western Red Cedar
DPS = Designated Play Surface
SS = Stainless Steel
HDG = Hot Dipped Galvanized
WWM = Welded Wire Mesh
TYP = Typical
C/W = Complete With
UNO = Unless Noted Otherwise
EWF = Engineered Wood Fiber
PIP = Poured-In-Place Rubber Surfacing
PT = Pressure Treated

TOOLS SUPPLIED WITH THIS PRODUCT

- No tools supplied

TOOLS THE INSTALLER NEEDS TO SUPPLY

- High torque drill
- 1/2" impact driver
- Set of socket - up to 3/4"
- Hammer drill
- Concrete drill bit, 1/2" x 8"
- Transit or Laser Level
- Rigging and lifting straps

EQUIPMENT THE INSTALLER NEEDS TO SUPPLY

- None

INSTALLER CREW AND TIME REQUIRED

Number of people needed: 2
Typical total person-hours to install: 4 hours
Time breakdown:

- 2 hours x 2 people for onsite fabrication and play equipment installation

MATERIALS THE INSTALLER NEEDS TO SUPPLY

- Threadmate threadlocker Vibra-Tite VC-3 (or equal)

WARNINGS

These instructions do not provide specific guidance on the use of tools or the lifting and moving heavy objects. It is assumed that competent people are installing this product who are familiar with using the tools and equipment required and are knowledgeable and skilled at lifting and positioning heavy objects.

PROPERTY OF EARTHSCAPE PLAY INC. - DO NOT COPY. DO NOT DISTRIBUTE.

MAKE SURE YOU HAVE ALL THE PARTS

Examine the equipment and ensure you have all the required parts listed in the table below.

PART IMAGE	ITEM NO.	PART NO.	DESCRIPTION	QTY.
SEE IMAGE THIS SHEET	1	B00022	CLIMBING NET ATTACHMENT POST - SURFACE MOUNT	12
	2	H30020	WASHER 1/2" X 1-3/8" SS	48
NO IMAGE PROVIDED	3	H60001	WELDED CHAIN 316 SS 0.375IN X 36IN LONG	12
	4	H60018	QUICK LINK 3/8" SS 316	12
	5	H60020	TITEN HD 1/2" X 5" CONCRETE SCREW	48

IMAGES OF FASTENERS IN THIS TABLE ARE REPRESENTATIONAL TO HELP IDENTIFY PARTS.

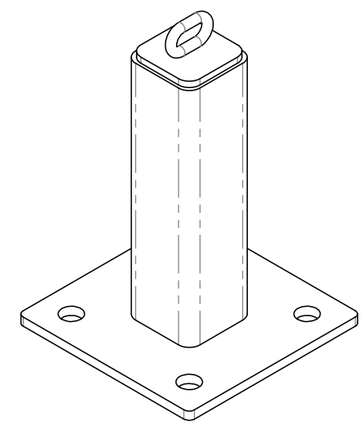

B00022 - CLIMBING NET ATTACHMENT POST

PROPERTY OF EARTHSCAPE PLAY INC. - DO NOT COPY. DO NOT DISTRIBUTE.

LOCATE PLAY EQUIPMENT

SLING SEATS - PIP

STEP 1 - LOCATING THE EQUIPMENT ON SITE

Layout the edges of the 12 Net Attachment Posts relative to the 1 level tower corner post base bracekts. Ensure you reference the correct side of the tower.

STEP 2 - SECURE BRACKETS TO CONCRETE FOUNDATION

Secure the bottom of the sling seat ropes (pre-installed on 1 level tower) to the Climbing Net Attachment Post as per Detail A this sheet.

Include 3/8" chain and quicklink as noted. Adjust length of chain as needed. Cut and dispose of excess.

STEP 3 - PIP SURFACING

Layout and installation of PIP surfacing is beyond the scope of these instructions, however, please refere to Typical PIP Surface Detail this sheet to see the intended cross section of the play surface relative to the Net Attachment Post bracket.

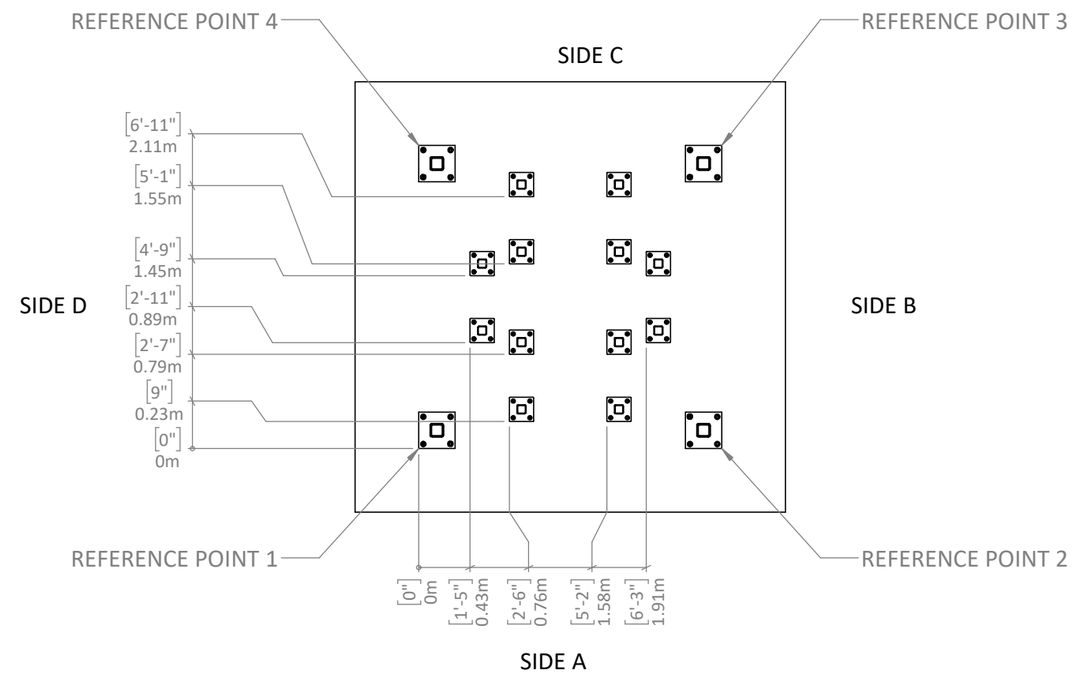

NET ATTACHMENT POST LAYOUT

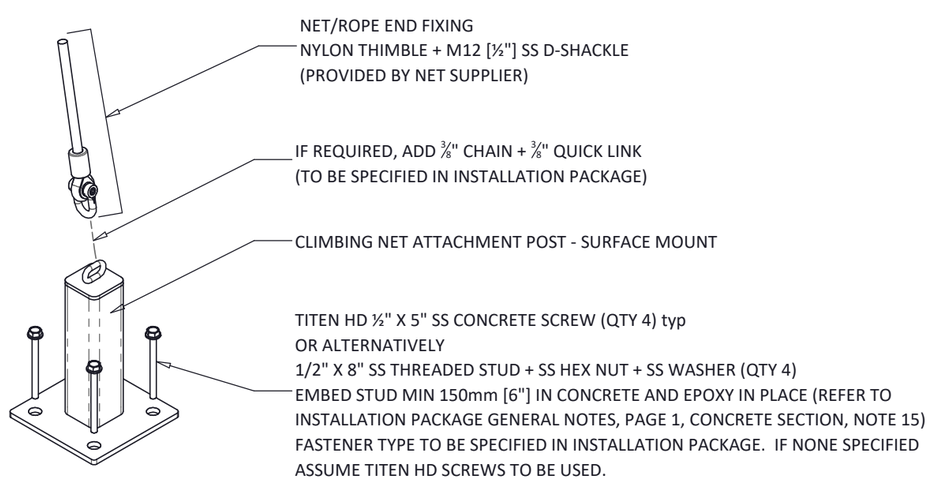

DETAIL A

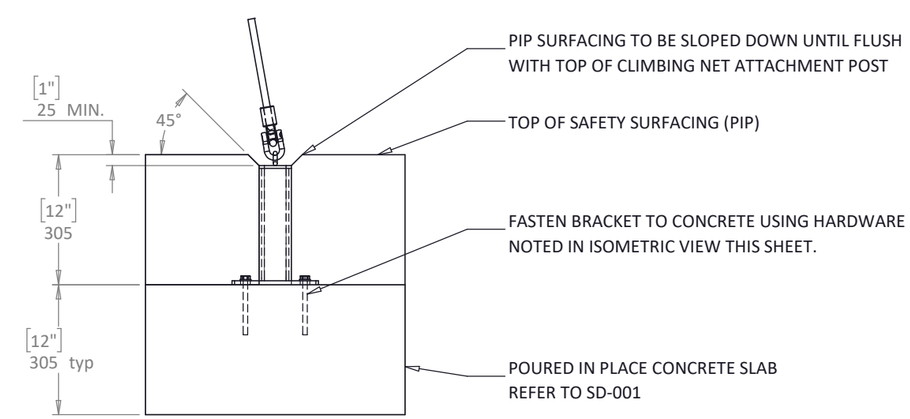

TYPICAL PIP SURFACING DETAIL

PROPERTY OF EARTHSCAPE PLAY INC. - DO NOT COPY. DO NOT DISTRIBUTE.

INSTALLATION INSTRUCTIONS

EARTHSCAPE COLLECTIONS

WITZEL DYCE
ENGINEERING INC.
PROJECT NO.: 12936-165

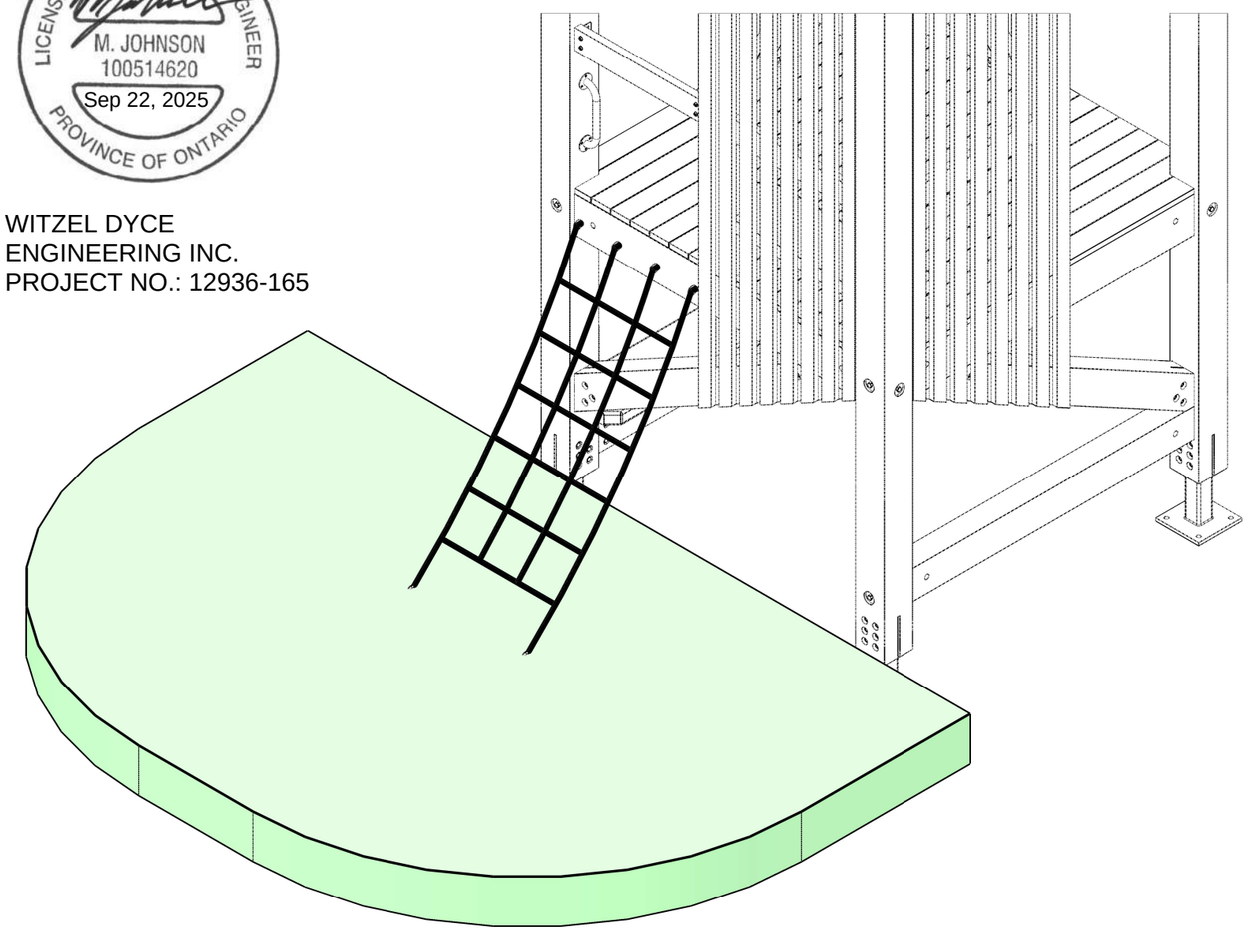

SAMPLE ISOMETRIC
(MAY NOT MATCH PROJECT SPECIFIC LOCATION OF SUB-ASSEMBLY)

ACCESS CLIMBING NET - PIP

THESE INSTRUCTIONS APPLY TO THE FOLLOWING VERSIONS OF THIS PRODUCT:

F00405 - ACCESS CLIMBING NET - PIP

WHICH IS DESIGNED TO BE INSTALLED ON THE FOLLOWING PRODUCTS:

F00185 - 1 LEVEL TIMBER TOWER
F00407 - 2 LEVEL TIMBER TOWER
F00408 - 3 LEVEL TIMBER TOWER

NOTE: COLOURS SHOWN ARE REPRESENTATIONAL AND MAY NOT BE THE SAME AS THOSE OF THE SUPPLIED PRODUCT

FOR CSA AND ASTM SPECIFICATIONS AND GENERAL NOTES SEE MAIN STRUCTURE INSTALLATION PACKAGE

DATE DOCUMENT RELEASED 2022-06-05
DOCUMENT NUMBER: 1073937-R1

PROPERTY OF EARTHSCAPE PLAY INC. - DO NOT COPY. DO NOT DISTRIBUTE.

PLEASE READ ALL INSTRUCTIONS

Before starting to install this equipment be sure to read through and understand these instructions.

If you have any questions, contact your local dealer for assistance before proceeding.

MEASUREMENTS AND STANDARDS

Measurements have been provided in both millimeters and [feet-inches]. Ensure to follow standards noted for the location in which this play equipment is being installed. Those marked CSA are to be used in Canada and those marked ASTM to be used in the United States.

LIST OF ABBREVIATIONS

AYC = Alaskan Yellow Cedar
WRC = Western Red Cedar
DPS = Designated Play Surface
SS = Stainless Steel
HDG = Hot Dipped Galvanized
WWM = Welded Wire Mesh
TYP = Typical
C/W = Complete With
UNO = Unless Noted Otherwise
EWF = Engineered Wood Fiber
PIP = Poured-In-Place Rubber Surfacing
PT = Pressure Treated

TOOLS SUPPLIED WITH THIS PRODUCT

- None supplied

TOOLS THE INSTALLER NEEDS TO SUPPLY

- Hammer drill
- Set of concrete drill bits - diameter and length as needed to install concrete screws
- High torque drill
- 1/2" ratcheting socket wrench
- Socket set up to 3/4"

EQUIPMENT THE INSTALLER NEEDS TO SUPPLY

- None

INSTALLER CREW AND TIME REQUIRED

Number of people needed: 2
Typical total person-hours to install: 2

Time breakdown:
- 1 hour x 2 person for onsite fabrication and play equipment installation

MATERIALS THE INSTALLER NEEDS TO SUPPLY

- Threadmate threadlocker Vibra-Tite VC-3 (or equal)

WARNINGS

These instructions do not provide specific guidance on the use of tools or the lifting and moving heavy objects. It is assumed that competent people are installing this product who are familiar with using the tools and equipment required and are knowledgeable and skilled at lifting and positioning heavy objects.

PROPERTY OF EARTHSCAPE PLAY INC. - DO NOT COPY. DO NOT DISTRIBUTE.

MAKE SURE YOU HAVE ALL THE PARTS

Examine the equipment and ensure you have all the required parts listed in the table below.

Access net comes pre-installed on tower.

PART IMAGE	ITEM NO.	PART NO.	DESCRIPTION	QTY.
SEE IMAGE THIS SHEET	1	B00022	CLIMBING NET ATTACHMENT POST - SURFACE MOUNT	2
	2	H30020	WASHER 1/2" X 1-3/8" SS	8
	3	H60020	TITEN HD 1/2" X 5" CONCRETE SCREW	8

IMAGES OF FASTENERS IN THIS TABLE ARE REPRESENTATIONAL TO HELP IDENTIFY PARTS.

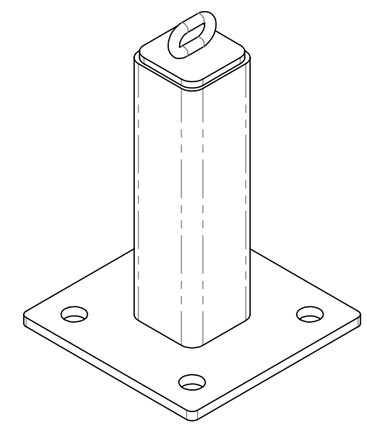

B00022 - CLIMBING NET ATTACHMENT POST

PROPERTY OF EARTHSCAPE PLAY INC. - DO NOT COPY. DO NOT DISTRIBUTE.

FINISHED PRODUCT

ACCESS CLIMBING NET - PIP

WHAT THE FINISHED PRODUCT LOOKS LIKE

Finished play surface and concrete foundations by Installer.

Foundation layout and details not shown in this package. Please review the main tower installation package for this information.

Views on this sheet may not match project specific location of the add-on accessory. It could be on a different side of the tower.
Review main tower installation package to see the position of this add-on for your specific project.

Layout and installation of PIP surfacing is beyond the scope of these instructions, however, please refere to Typical PIP Surface Detail this sheet to see the intended cross section of the play surface relative to the Net Attachment Post bracket.

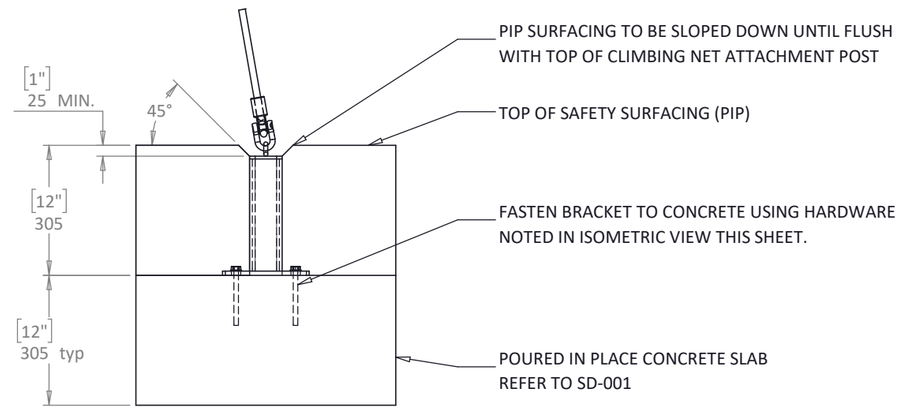

TYPICAL PIP SURFACE DETAIL

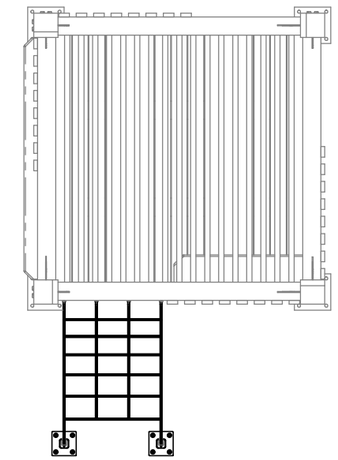

PLAN VIEW

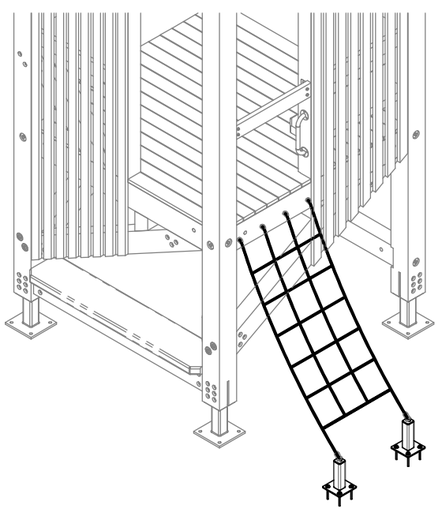

ISOMETRIC VIEW

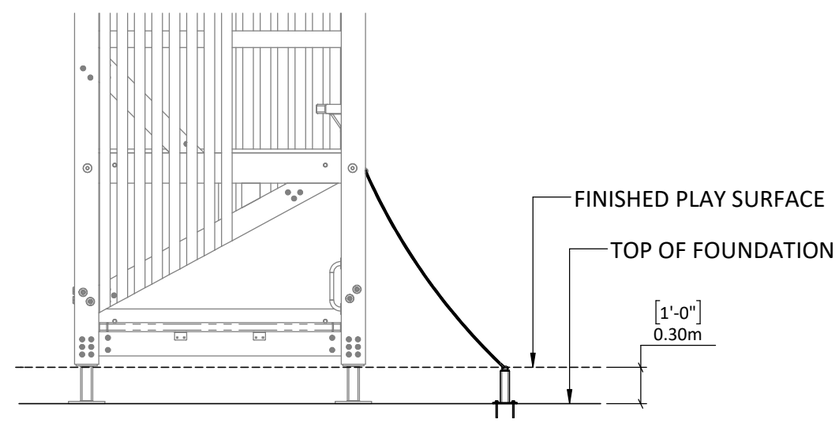

SIDE VIEW

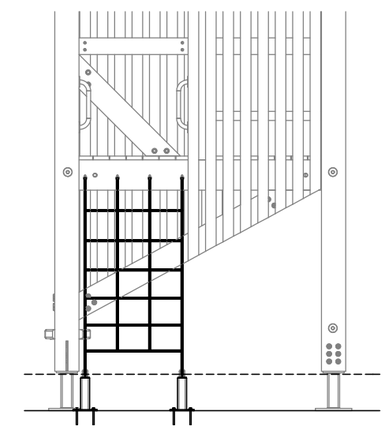

FRONT VIEW

PROPERTY OF EARTHSCAPE PLAY INC. - DO NOT COPY. DO NOT DISTRIBUTE.

LOCATE PLAY EQUIPMENT

ACCESS CLIMBING NET - PIP

STEP 1 - NET FOUNDATION

The concrete foundation needed for this add-on is illustrated in the main tower installation package and can vary from project to project. See main tower installation package for more information.

STEP 2 - PREPARE NET

Top end of net is pre-installed on tower. Unpack the net so it is hanging from the tower.

STEP 3 - LAYOUT CLIMBING NET ATTACHEMENT POSTS

Layout the position of the Climbing Net Attachment Post brackets as per the main tower installation package.

STEP 4 - CONNECT NET TO TOP OF POSTS

Connect the bottom end of the climbing net to the Attachement Posts as per Detail A this sheet.

STEP 5 - ADJUST ATTACHMENT POST POSITION AND SECURE TO CONCRETE PAD

Position the Attachement Posts to align with the layout marks and then check the tension in the net as noted in the Sample Elevation View this sheet.

If there is not enough sag, shift the attachment posts towards or away from the tower as needed until the correct sag is achiaved.

Secure the Attachment Posts to the pad with concrete screws as noted in Detail A this sheet.

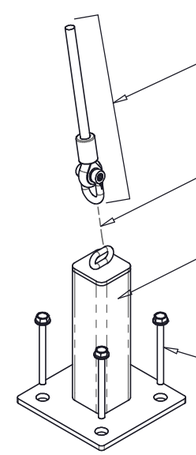

NET/ROPE END FIXING
NYLON THIMBLE + M12 [½"] SS D-SHACKLE
(PROVIDED BY NET SUPPLIER)

IF REQUIRED, ADD ⅜" CHAIN + ⅜" QUICK LINK
(TO BE SPECIFIED IN INSTALLATION PACKAGE)

CLIMBING NET ATTACHMENT POST - SURFACE MOUNT

TITEN HD ½" X 5" SS CONCRETE SCREW (QTY 4) typ
OR ALTERNATIVELY
1/2" X 8" SS THREADED STUD + SS HEX NUT + SS WASHER (QTY 4)
EMBED STUD MIN 150mm [6"] IN CONCRETE AND EPOXY IN PLACE (REFER TO INSTALLATION PACKAGE GENERAL NOTES, PAGE 1, CONCRETE SECTION, NOTE 15)
FASTENER TYPE TO BE SPECIFIED IN INSTALLATION PACKAGE. IF NONE SPECIFIED ASSUME TITEN HD SCREWS TO BE USED.

DETAIL A

APPLY THREADLOCK TO SECURE ALL SCREW CONNECTIONS

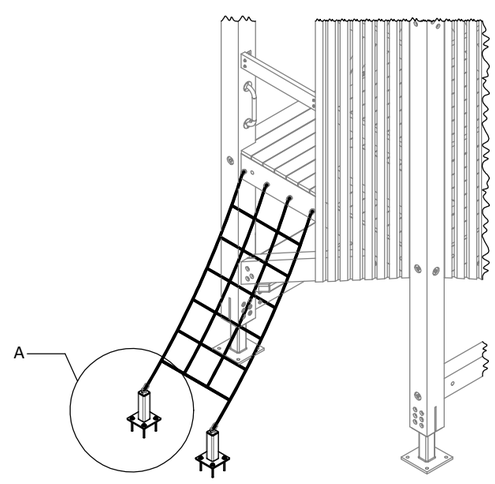

SAMPLE ISOMETRIC
(MAY NOT MATCH PROJECT SPECIFIC LOCATION OF SUB-ASSEMBLY)

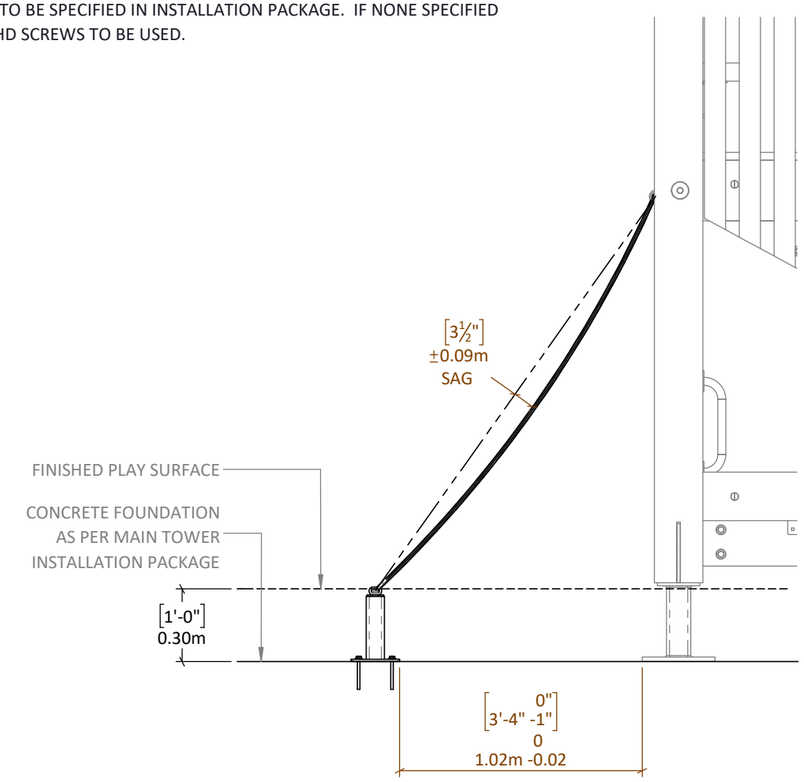

SAMPLE ELEVATION VIEW

Map of Targeted Areas and Species for Plant Management
Hurld Park Climate Resiliency Hub
Woburn, MA
March 2024

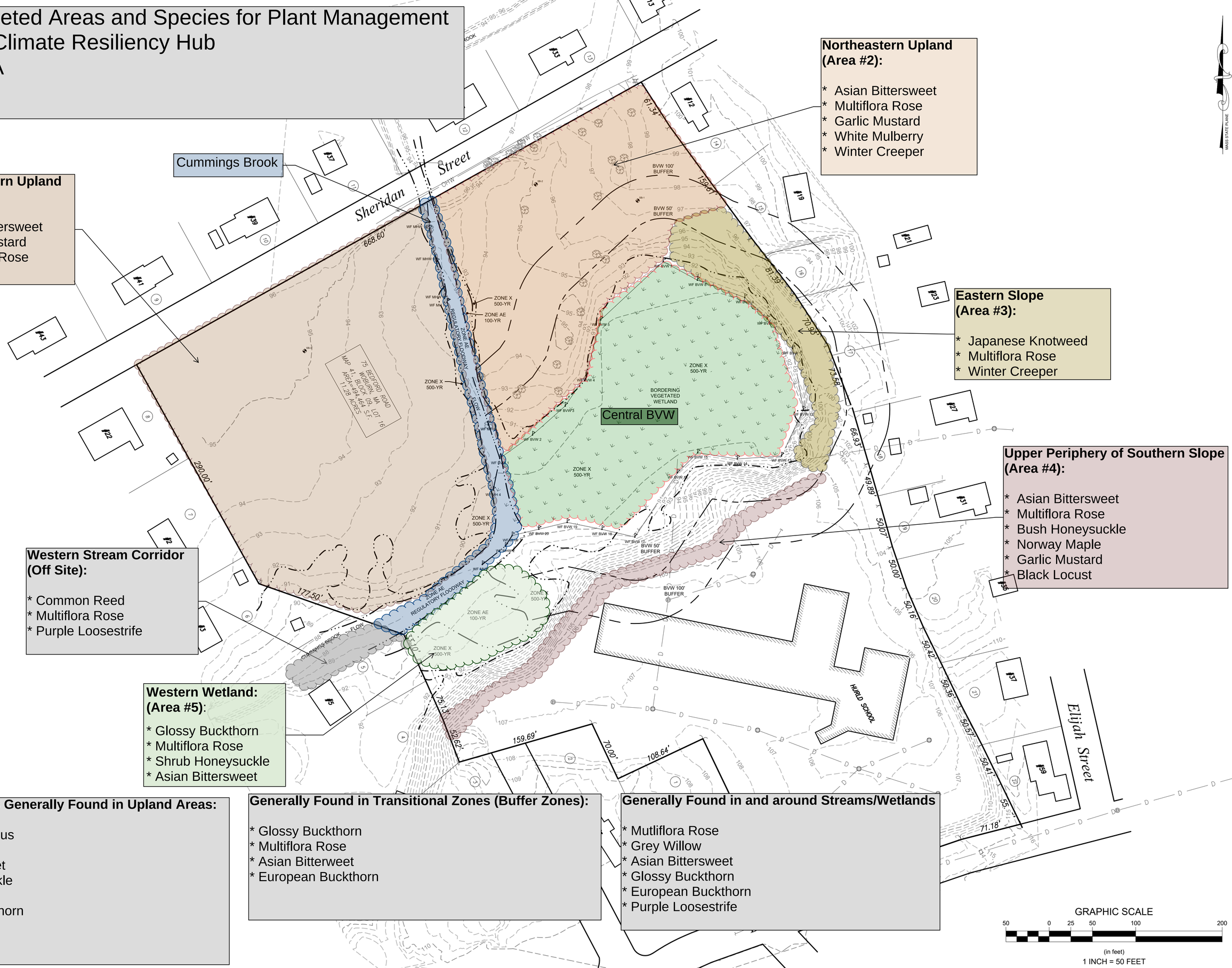

Northeastern Upland (Area #2):

* Asian Bittersweet
* Multiflora Rose
* Garlic Mustard
* White Mulberry
* Winter Creeper

Northwestern Upland (Area #1):

* Asian Bittersweet
* Garlic Mustard
* Multiflora Rose

Eastern Slope (Area #3):

* Japanese Knotweed
* Multiflora Rose
* Winter Creeper

Upper Periphery of Southern Slope (Area #4):

* Asian Bittersweet
* Multiflora Rose
* Bush Honeysuckle
* Norway Maple
* Garlic Mustard
* Black Locust

Western Stream Corridor (Off Site):

* Common Reed
* Multiflora Rose
* Purple Loosestrife

Western Wetland: (Area #5):

* Glossy Buckthorn
* Multiflora Rose
* Shrub Honeysuckle
* Asian Bittersweet

Invasive Species Generally Found in Upland Areas:

* Winged Euonymus
* Multiflora Rose
* Asian Bittersweet
* Bush Honeysuckle
* Garlic Mustard
* European Buckthorn
* Norway Maple
* Tree of Heaven

Generally Found in Transitional Zones (Buffer Zones):

* Glossy Buckthorn
* Multiflora Rose
* Asian Bitterweet
* European Buckthorn

Generally Found in and around Streams/Wetlands

* Mutliflora Rose
* Grey Willow
* Asian Bittersweet
* Glossy Buckthorn
* European Buckthorn
* Purple Loosestrife

GRAPHIC SCALE

50 0 25 50 100 200

(in feet)

1 INCH = 50 FEET

SPECIFICATIONS FOR CONSTRUCTION

1 GENERAL NOTES

1.1 THESE DESIGN DOCUMENTS WERE PREPARED BY 'VORTEX AQUATIC STRUCTURES INTERNATIONAL' FOR THE USE OF THEIR CLIENT ONLY. THE MATERIAL USED AND IDENTIFIED IN THEM REFLECTS VORTEX AQUATIC STRUCTURES INTERNATIONAL'S BEST JUDGMENT IN LIGHT OF THE INFORMATION AVAILABLE AT THE TIME OF PREPARATION. FOR THE PURPOSE OF THESE DESIGN DOCUMENTS, 'VORTEX AQUATIC STRUCTURES INTERNATIONAL' IS SYNONYMOUS WITH 'VORTEX'.

1.2 VORTEX ACCEPTS NO RESPONSIBILITY FOR DAMAGES, IF ANY, SUFFERED BY ANY THIRD PARTY AS A RESULT OF DECISIONS MADE OR ACTIONS BASED ON THESE DESIGN DOCUMENTS WITHOUT THE PREVIOUS CONSULTATION TO VORTEX.

1.3 ALL WORK, MATERIALS AND THEIR ASSEMBLIES SHALL CONFORM TO THE STANDARDS, REGULATIONS AND CODES CURRENTLY IN FORCE FOR ALL TRADES, AISC, ACNOR, EN, OR IBC.

1.4 THESE DESIGN DOCUMENTS DO NOT INDICATE THE METHOD OR MEANS OF CONSTRUCTION. WHEN APPLICABLE, THE CONTRACTORS SHALL SUPERVISE AND DIRECT ALL THE WORK AND SHALL BE SOLELY RESPONSIBLE FOR ALL CONSTRUCTION MEANS, METHODS, PROCEDURES AND SEQUENCES AS PER STANDARD BEST PRACTICES.

1.5 DO NOT SCALE DRAWINGS.

1.6 USE ONLY THOSE MARKED "ISSUED FOR CONSTRUCTION".

1.7 THE CONTRACTOR SHALL REVIEW THESE DESIGN DOCUMENTS AND REPORT ANY CONFLICTS OR OMISSIONS TO THE VORTEX IMMEDIATELY.

1.8 TEMPORARY SUPPORTS, WHICH WILL BE REQUIRED DURING CONSTRUCTION, SUCH AS FORMWORK, BRACING, SHORING, ETC. ARE NOT SHOWN ON THESE DRAWINGS AND ARE THE RESPONSIBILITY OF THE CONTRACTOR. THE CONTRACTOR IS RESPONSIBLE TO ENSURE THAT ALL SAFE CONSTRUCTION PROCEDURES ARE FOLLOWED.

1.9 THE FOLLOWING SPECIFICATIONS ARE VORTEX'S MINIMUM RECOMMENDATIONS TO OBTAIN A QUALITY PRODUCT. THE CONTRACTOR SHALL FOLLOW THE LOCAL CODES IF MORE RESTRICTIVE.

1.10 ALL SEEFLOW COMPONENTS TO BE SNUG-TIGHT ONLY. USING POWER TOOLS OR TIGHTEN HARDWARE FULLY-TENSIONED CAN PRODUCE CRACKING ON THE PLASTIC.

2 EXCAVATION

2.1 ANY SHORING OR TEMPORARY SHORING NOT SHOWN ON DRAWINGS WILL BE EXECUTED, IN A SAFE MANNER, BY THE GENERAL CONTRACTOR.

2.2 IT IS THE RESPONSIBILITY OF OTHERS TO VERIFY THE EXISTENCE OF ANY UNDERGROUND SERVICES ETC.

2.3 IF AVAILABLE, REFER TO SOIL REPORT FOR BACKFILL REQUIREMENTS. ALL BACKFILL (FOR SLAB ON GRADE, ETC.) MUST BE DONE IN ACCORDANCE WITH THE RECOMMENDATIONS OF A QUALIFIED PROFESSIONAL. USE ONLY FREE DRAINING, GRANULAR, MINERAL, INERT AND NON- REACTIVE FILL.

3 FOUNDATIONS

3.1 REFER TO SOIL REPORT FOR RECOMMENDATIONS.

3.2 ALL FOOTINGS SHALL REST ON A HOMOGENEOUS LAYER OF UNDISTURBED SOIL OR ENGINEERED BACKFILL WITH A MINIMUM ALLOWABLE BEARING CAPACITY OF 100KPA (2000 PSF) AND MAXIMUM DIFFERENTIAL SETTLEMENT OF 19 MM (0.75"). ALL ORGANIC MATERIAL SHALL BE REMOVED.

3.3 IT IS THE CONTRACTOR'S RESPONSIBILITY TO ENSURE THAT THE SOIL AT ALL FOOTING LOCATIONS BE VERIFIED BY A QUALIFIED SOILS EXPERT BEFORE POURING FOOTINGS TO ENSURE FOOTINGS REST ON APPROPRIATE STRATA.

3.4 WHEN APPLICABLE, FOLLOW GEOTECHNICAL EXPERT RECOMMENDATIONS FOR ALL EXTERIOR FOOTINGS TO ENSURE FROST PROTECTION.

4 CONCRETE

4.1 ALL CONCRETE MATERIALS, PROCEDURES, TOLERANCES & WORKMANSHIP SHALL CONFORM TO THE LATEST ISSUES OF ACI-318 AND ACI 317 OR ACNOR CAN3-A23.1 & A23.2, DEPENDING ON PROJECT LOCATION.

4.2 CONCRETE THAT HAS BEEN IN THE TRUCKS LONGER THAN 2 HOURS SHALL BE REJECTED. DO NOT ADD WATER TO THE CONCRETE IN THE TRUCKS OR ON THE SITE UNDER ANY CIRCUMSTANCES.

4.3 USE MAXIMUM 76mm (3") SLUMP, 19mm (3/4") AGGREGATE, UNLESS OTHERWISE-NOTED. USE 5-7% AIR ENTRAINMENT FOR CONCRETE EXPOSED TO WEATHER ONLY.

4.4 ALL GROUT SHALL BE NON-SHRINK TYPE WITH A MINIMUM 28 DAYS STRENGTH OF 35.0 MPA (5000 PSI). USE 25 MM (1") GROUT UNDER ALL STEEL COLUMN BASE PLATES.

4.5 CONCRETE STRENGTH @ 28 DAYS TO BE:

4.5.1 FOUNDATIONS (FOOTINGS): 25.0 MPA (3500 PSI), UNLESS OTHERWISE NOTED.

4.5.2 INTERIOR SLAB ON GRADE: 25.0 MPa (3500 PSI), UNLESS OTHERWISE NOTED.

4.5.3 EXTERIOR SLAB ON GRADE: 32.0 MPa (4500 PSI), UNLESS OTHERWISE NOTED.

4.6 MINIMAL RE-BAR COVER:

4.6.1 CONCRETE POURED ON-GRADE = 76mm (3") COVER

4.6.2 CONCRETE POURED INTO FORMWORK BUT EXPOSED TO SOIL AND WEATHER FOR REBAR 15m (#4) AND UNDER = 50mm (2") COVER

5 REINFORCING STEEL

5.1 DEPENDING ON PROJECT LOCATION, ALL REINFORCING STEEL SHALL CONFORM TO ASTM A615 (BARS 15m (#4) TO BE GRADE 60 WITH SUPPLEMENTARY REQUIREMENTS ON S1.

BARS SMALLER THAN 15m (#4), TO BE GRADE 40); OR TO ACNOR GRADE G30.12 [FY = 400MPA (60,000 PSI), UNLESS OTHERWISE NOTED].

5.2 USE CONCRETE, PLASTIC OR STEEL SUPPORT BARS, AS PER ACI (MANUAL OF STANDARD PRACTICE FOR DETAILING CONCRETE STRUCTURES). THE RE-BAR PLACER MUST REMAIN ON-SITE DURING POURS TO VERIFY CORRECT POSITIONING OF RE-BARS. SLANT UPPER REINFORCING STEEL IN LINE WITH THE SLOPE OF THE SLAB, IF APPLICABLE.

5.3 BARS SHALL BE SECURELY WIRED PER LATEST EDITION OF CRSI (RECOMMENDED PRACTICE FOR PLACING REINFORCING BARS).

5.4 ALL REINFORCING STEEL IS TO BE KEPT CLEAN AND FREE OF MUD, SNOW, ICE, AND ANY CONTAMINANTS.

5.5 VERTICAL AND CONTINUOUS REBAR SHALL BE LAPPED TO DEVELOP FULL TENSILE CAPACITY OF THE BAR. FOR 15M (#4) BARS MINIMUM LAP OF 610mm (24").

6 EXTERIOR / INTERIOR SLAB ON GRADE

6.1 FOLLOW THE GEOTECHNICAL EXPERT RECOMMENDATIONS FOR PREPARATION OF SOIL BEFORE POURING THE CONCRETE. ALL GRANULAR MATERIAL SHALL BE MOISTENED

IMMEDIATELY BEFORE POURING THE CONCRETE. WATER AS NEEDED. DO NOT USE A VAPOR BARRIER.

6.2 NO TRUCKS ARE PERMITTED ON THE CONSTRUCTION SITE (OF THE SLAB) AFTER THE FINAL COMPACTION, EITHER BEFORE OR DURING, THE POUR.

6.3 SLAB TO BE MINIMUM 6" THICK, REINFORCED WITH 10m (#3) @ 300mm (12") C/C REBAR PLACED IN BOTH DIRECTIONS AT MID-HEIGHT OF THE SLAB, UNLESS OTHERWISE NOTED ON PLANS.

6.4 REFER TO CONCRETE SECTION FOR MINIMUM COMPRESSIVE STRENGTH AND AIR-ENTRAINMENT REQUIREMENTS.

6.5 FINISHING WILL BE MEDIUM BROOM.

6.6 CONTROL JOINTS (SAW-CUTS) TO BE LOCATED IN EACH DIRECTION, AT REGULAR INTERVALS, WITH A MAXIMUM DISTANCE OF 3 METERS (10 FEET). SHALL BE MINIMUM 3 MM (1/8") WIDE AND SHALL PENETRATE THE SLAB TO A MINIMUM DEPTH OF 1/3 OF THE THICKNESS OF THE SLAB. CONTROL JOINTS SHOULD BE DONE AS SOON AS POSSIBLE WITHOUT DAMAGING THE CONCRETE, BUT NO LATER THAN 18 HOURS AFTER POURING.

6.7 WHEN POSSIBLE AND TO AVOID SHRINKAGE CRACKING, HUMIDITY SHALL BE MAINTAINED FOR 7 DAYS DURING THE CURING PERIOD OF THE SLAB. WATER AND USE POLYETHYLENE CLOTH OR BAG. THE CONCRETE MUST DRY UNIFORMLY.

7 CONCRETE WORK IN COLD OR HOT WEATHER (MINIMUM REQUIREMENTS)

7.1 COLD WEATHER REQUIREMENTS APPLY WHEN THE MEAN AIR IS LESS THAN 5 DEGREES CELSIUS (40 DEGREES FAHRENHEIT).

7.2 GENERAL REQUIREMENTS FOR COLD WEATHER CONCRETE WORK SHALL BE AS PER ACI 306R-88; OR AS PER THE NBC'S LATEST REQUIREMENTS INCLUDING THE LATEST ISSUE OF CSA STANDARD CAN3-A23.1.

7.3 ALL SNOW AND ICE SHALL BE REMOVED FROM FORMS AND REBAR WITH STEAM AND COMPRESSED AIR BEFORE POURING. DO NOT USE DE-ICING SALT (CALCIUM CHLORIDE) OR ANY OTHER SALTS UNDER ANY CIRCUMSTANCES.

7.4 CONCRETE SHALL HAVE A MINIMUM TEMPERATURE OF 20 DEGREES CELSIUS AND A MAXIMUM TEMPERATURE OF 25 DEGREES CELSIUS WHILE POURING. IT IS THE CONTRACTOR'S RESPONSIBILITY TO ENSURE THAT THESE REQUIREMENTS ARE SATISFIED. ANY CONCRETE THAT DOES NOT CONFORM MUST BE REJECTED.

7.5 THE SURFACE OF POURED CONCRETE SHALL BE PROTECTED BY MEANS OF SUITABLE COVERINGS AND INSULATION (TO BE DETERMINED BY TEMPERATURE) DURING THE CURING PROCESS.

7.6 GENERAL REQUIREMENTS FOR HOT WEATHER CONCRETE WORK SHALL BE AS PER ACI 305R-99; OR AS PER LOCAL CODE REQUIREMENTS.

8 PIPING

8.1 WDS CONFIGURATION ARE SCHEMATIC AND MAY BE MOVED OR ADJUSTED ON SITE BY VORTEX CERTIFIED INSTALLER TO ADJUST FOR SITE CONDITIONS.

8.2 ANY REQUIRED BACKFLOW PREVENTER, PRESSURE REGULATOR & WATER METER ON THE CITY WATER MAIN SHALL BE PROVIDED BY OTHER.

8.3 ALL PIPE LINES TO FEATURES TO HAVE A 1% MINIMUM RECOMMENDED SLOPE FOR PROPER WINTERIZATION.

8.4 ALL LINE SIZING (FEATURE CONNECTION TABLE) ASSUMES A MAXIMUM DISTANCE OF 30 FEET BETWEEN THE WATER DISTRIBUTION MANIFOLD AND THE FURTHEST PLAY PRODUCT. DISTANCES ABOVE 30 FEET MAY REQUIRE AN INCREASE IN LINE SIZING. PLEASE CONTACT VORTEX.

8.5 FINAL LOCATION OF DRAIN AND LINE ROUTING ARE TO BE DETERMINED BY OTHERS.

8.6 PRESSURE LINES ARE RECOMMENDED TO BE SCHEDULE K-COPPER, AND NON-PRESSURE LINES TO BE SCHEDULE 40, UNLESS OTHERWISE REQUESTED BY LOCAL CODE.

8.7 DRAINAGE LINES ARE RECOMMENDED TO BE SDR 35, UNLESS OTHERWISE REQUESTED BY LOCAL CODE.

8.8 PIPING SHOULD BE INSPECTED AFTER TRANSPORTATION FOR CUTS, SCRATCHES, GOUGES OR SPLITS; DAMAGED SECTIONS MUST BE DISCARDED OR CUT OUT.

8.9 PIPE SHALL BE INSTALLED BELOW THE FROST LEVEL NOT LESS THAN 12" (ASTM F-645) UNLESS OTHERWISE REQUESTED BY LOCAL CODE.

8.10 PIPE INSTALLATION MINIMUM COVER SHOULD BE EVALUATED ACCORDING TO ASTM D-2774, UNLESS OTHERWISE REQUESTED BY LOCAL CODE.

8.11 SPECIAL CONSIDERATIONS SHOULD BE TAKEN FOR THERMAL CONDITIONS, EXPANSION AND CONTRACTIONS DUE TO TEMPERATURE SHOULD BE EVALUATED BEFORE THE INSTALLATION BY THE CONTRACTOR.

8.12 MINIMUM 50 PSI REQUIRED AT THE INLET OF THE BACKFLOW PREVENTER AND PRESSURE REGULATING DEVICE.

8.13 MAXIMUM FLOW CAPACITY OF HYDRAULIC ACTIVATOR IS 45 GPM.

8.14 TOTAL FLOW OF THE FEATURES IS 48.4 GPM.

8.15 THERE IS NO SEQUENCING, FEATURES ARE ON WHEN ACTIVATOR IS PRESSED.

9 ELECTRICAL

9.1 EQUIPMENT BONDING; FEATURES SHALL BE CONNECTED TO AN EQUIPOTENTIAL BONDING GRID WITH A SOLID RIGID COPPER CONDUCTOR, THE MINIMUM SIZE OF BONDING CONDUCTORS NOT BE SMALLER THAN #6 AMERICAN WIRE GAUGE (AWG) ($16mm^2$) COPPER. BOND TO ALL METALLIC PARTS LOCATED IN THE SPLASHPAD/POOL AND TO THE REBAR, TO RUN CONTINUOUS TO THE WATER PUMP AND ELECTRICAL SUPPLY PANELS.

9.2 GRID STRUCTURE; THE EQUIPOTENTIAL BONDING GRID SHALL COVER THE CONTOUR OF THE WATER BODY AREA AND ANY DECK EXTENDING 3FT (1m). HORIZONTALLY FROM THE INSIDE WALLS OF THE SPLASHPAD/WATER BODY. THE EQUIPOTENTIAL BONDING GRID SHALL BE ARRANGED IN A 12 IN (300mm). BY 12 IN (300mm). NETWORK OF CONDUCTORS IN A UNIFORMLY SPACED PERPENDICULAR GRID PATTERN WITH TOLERANCE OF 4 IN (100mm). A J-JUNCTION BOND CLAMP (DIRECT BURIAL CERTIFIED) CLAMPED TO A REBAR WITH WIRE LOOPED THROUGH CONNECTOR AND CLAMPED TO STEEL AND TO THE SPLASHPAD/POOL PUMP WATER

9.3 ALL ELECTRICAL EQUIPMENT SHALL BE GROUNDED; THE FOLLOWING EQUIPMENT SHALL BE GROUNDED. ALL ELECTRICAL EQUIPMENT LOCATED WITHIN 5FT (1.5 m) OF THE INSIDE WALL OF THE SPECIFIED BODY OF WATER." THIS EQUIPMENT ALSO INCLUDES (BUT NOT LIMITED TO): FEATURES, ELEVATIONS, DRAIN, REBAR, WATER INLET, SKIMMER, LADDER, SLIDES, DIVING STRUCTURE, UNDERWATER LIGHTING, JUNCTION BOXES, AND WATER CIRCULATING/HEATING EQUIPMENT.

ALL BONDING AND GROUNDING MUST COMPLY WITH NEC, CEC, AND LOCAL CODES.

9.4 ALTERNATE MEANS; WHERE STRUCTURAL REINFORCING STEEL IS NOT AVAILABLE OR IS ENCAPSULATED IN A NONCONDUCTIVE COMPOUND, A COPPER CONDUCTOR(S) SHALL BE UTILIZED WHERE THE FOLLOWING REQUIREMENTS ARE MET: (1) AT LEAST ONE MINIMUM 6 AWG BARE SOLID COPPER CONDUCTOR SHALL BE PROVIDED. (2) THE CONDUCTORS SHALL FOLLOW THE CONTOUR OF THE PERIMETER SURFACE. (3) ONLY LISTED SPLICES SHALL BE PERMITTED. (4) THE REQUIRED CONDUCTOR SHALL BE 18 IN TO 24 IN (450mm TO 600mm) FROM THE INSIDE WALLS OF THE POOL. (5) THE REQUIRED CONDUCTOR SHALL BE SECURED WITHIN OR UNDER THE PERIMETER SURFACE (4 IN TO 6 IN (100mm TO 150mm). BELOW THE SUBGRADE.

9.5 SPLASHPAD/POOL WATER; WHERE NONE OF THE BONDED PARTS IS IN DIRECT CONNECTION WITH THE POOL WATER, THE POOL WATER SHALL BE IN DIRECT CONTACT WITH AN APPROVED CORROSION-RESISTANT CONDUCTIVE SURFACE THAT EXPOSED NOT LESS THAN 9 IN.2 ($5800mm^2$) OF SURFACE AREA TO THE POOL WATER AT ALL TIMES. THE CONDUCTIVE SURFACE SHALL BE LOCATED WHERE IT IS NOT EXPOSED TO PHYSICAL DAMAGE OR DISLODGEMENT DURING USUAL POOL ACTIVITIES, AND IT SHALL BE BONDED IN ACCORDANCE WITH NEC, CEC, AND LOCAL CODES.

Drawing #	Drawing Name	Rev #
P-001	Plumbing Layout	00
E-003	Bonding Layout	00

VORTEX USA Inc.
3500 South Dupont Highway, Suite EP-101
Dover, Delaware
United States 19901
Phone: +1 (877) 586-7839

COPYRIGHT VORTEX USA Inc-THIS DOCUMENT AND THE IDEAS, RENDERINGS AND OTHER CONTENTS CONTAINED THEREIN ARE THE SOLE PROPETY OF VORTEX USA Inc AND MAY NOT BE DISSEMINATED, COPIED, REPRODUCED OR OTHERWISE USED WITHOUT PRIOR WRITTEN CONSENT OF VORTEX USA Inc.

Hurld Park Splashpad

Abbreviations	
A	Architectural
C	Civil Work
P	Plumbing Layout
PD	Plumbing Details
E	Electrical Layout
ED	Electrical Details
FT	Feature Drawings

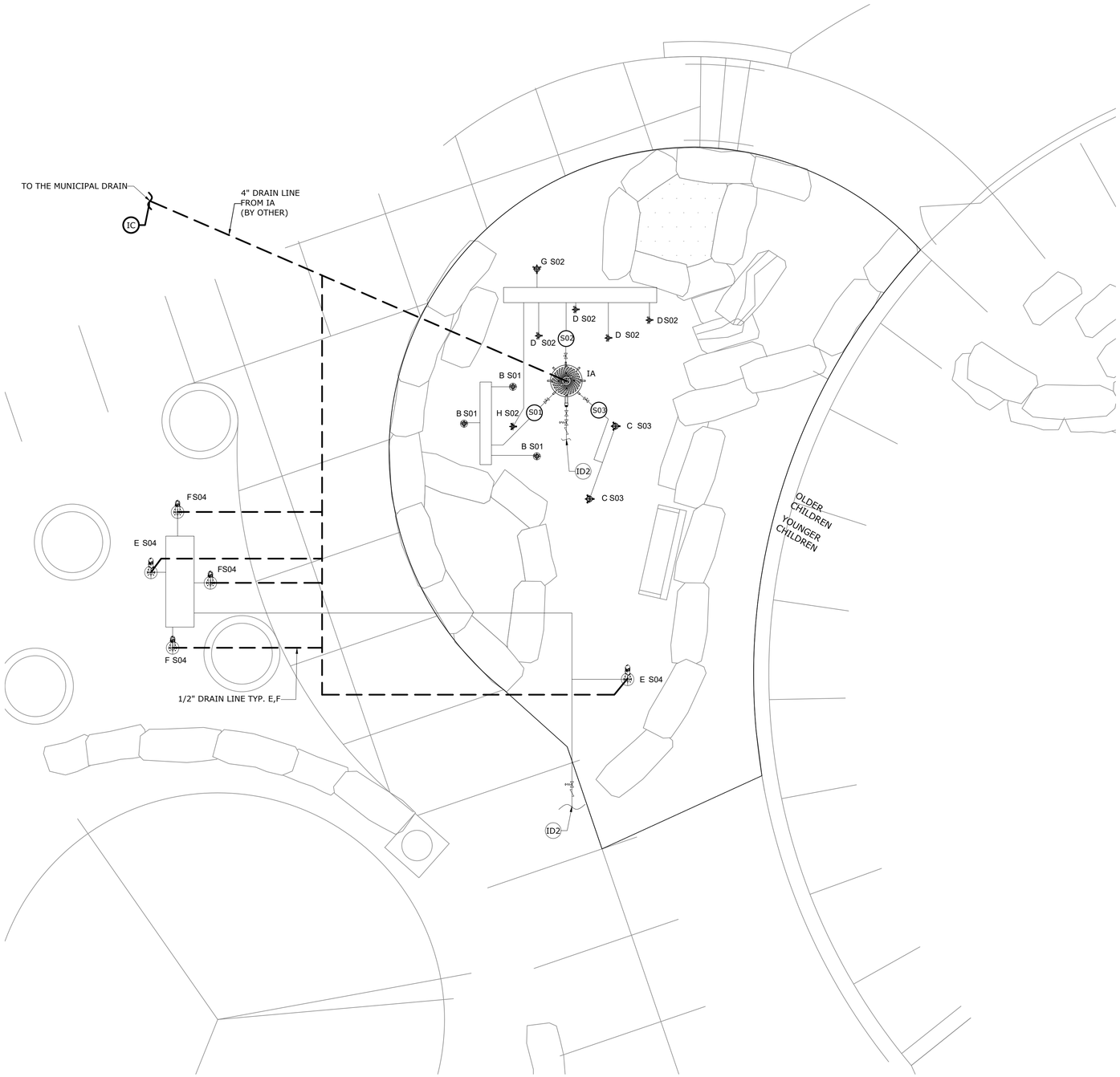

1 / P-001 PLUMBING LAYOUT

WATER LINE
DRAIN LINE

Feature Connection Table						
Manifold Output Ref.	Gate Valve	Feature Ref.	Feature	Qty	Line Size	Gpm
S01	1"	B	Water Jelly N°1 VOR 7010	3	1 1/2"	18.0
S02	1"	D	Jet Stream N°1 VOR 7512	4	1 1/2"	10
		G	Sparkle N°1 VOR 0324	1		3
		H	Geyser N°1 VOR 0301	1		7.5
S03	1"	C	Magic Mist N°2 VOR 8099	2	1"	9

Manifold Output Ref.	Feature Ref.	Feature	Qty	Line Size	Gpm
S04	E	Glomist VOR 7247	2	1"	0.8
	F	Glomist Nano VOR 7248	3		0.6

Product Legend		
Product Ref.	Product	Qty
IA	Push Button Activator VOR 0605	1
IC	4" Drain Line To Municipal Drain (By Other)	1
ID1	1 1/2" City Water Line (By Other)	1
ID2	1" City Water Line (By Other)	1
	1 1/2" Pressure Regulator (by Other)	1
	1 1/2" Backflow Preventer (by Other)	1
	1" Pressure Regulator (by Other)	1
	1" Backflow Preventer (by Other)	1
	1 1/2" Ball Valve located Inside Hydraulic Activator (by Vortex)	1
	1" Gate Valve located inside the Hydraulic Activator (by Vortex)	3

VORTEX

VORTEX USA Inc.
3500 South Dupont Highway, Suite EP-101
Dover, Delaware
United States 19901
Phone: +1 (877) 586-7839

COPYRIGHT VORTEX USA Inc-THIS DOCUMENT AND THE IDEAS, RENDERINGS AND OTHER CONTENTS CONTAINED THEREIN ARE THE SOLE PROPETY OF VORTEX USA Inc AND MAY NOT BE DISSEMINATED, COPIED, REPRODUCED OR OTHERWISE USED WITHOUT PRIOR WRITTEN CONSENT OF VORTEX USA Inc.

Hurld Park Splashpad

Project Location
Woburn, MA

Project Number
42368

Version
VC

Date	Revision Description	No.	By
05/Nov/2025	Issued for Approval	00	SN

Drawing Title
Plumbing Layout

Drawn by	Verified by
SN	MAB
Scale	**Date**
1/4"=1'-0"	05/Nov/2025

Page #
P-001

Ref	Product	Qty
IA	Push Button Activator VOR 0605	1
B	Water Jelly N°1 VOR 7010	3
C	Magic Mist N°2 VOR 8099	2
D	Jet Stream N°1 VOR 7512	4
E	Glomist VOR 7247	2
F	Glomist Nano VOR 7248	3
G	Sparkle N°1 VOR 0324	1
H	Geyser N°1 VOR 0301	1

1
E-003

BONDING LAYOUT

1. REFER TO SPECS ON COVER PAGE
2. COORDINATE THIS DRAWING WITH ARCHITECTURAL, CIVIL, PLUMBING & ELECTRICAL.

BONDING WIRE - - - - - - - - - - - - - -

VORTEX

VORTEX USA Inc.
3500 South Dupont Highway, Suite EP-101
Dover, Delaware
United States 19901
Phone: +1 (877) 586-7839

COPYRIGHT VORTEX USA Inc-THIS DOCUMENT AND THE IDEAS, RENDERINGS AND OTHER CONTENTS CONTAINED THEREIN ARE THE SOLE PROPETY OF VORTEX USA Inc AND MAY NOT BE DISSEMINATED, COPIED, REPRODUCED OR OTHERWISE USED WITHOUT PRIOR WRITTEN CONSENT OF VORTEX USA Inc.

Hurld Park Splashpad

Project Location
Woburn, MA

Project Number
42368

Version
VC

Date	Revision Description	No.	By
05/Nov/2025	Issued for Approval	00	SN

Drawing Title
Bonding Layout

Drawn by	Verified by
SN	MAB
Scale	Date
1/2"=1'-0"	05/Nov/2025

Page #
E-003

SECTION 31 13 19 – INVASIVE PLANT REMOVAL (REVISED)

PART 1 GENERAL

1.1 SUMMARY

A. Section includes: The work associated with invasive species removal by means of mechanical and chemical control. Invasive and nuisance species work on site includes Japanese Knotweed, Asiatic Bittersweet, and any other understory invasive species (shrub, vine, forb, or grass), and trees under 2" caliper that are identified on the Massachusetts Prohibited Plant List, and are within the Limit of Work depicted on the Drawings, regardless of if it is identified on the drawings or not.

B. Any infested soil and/or plant material including plant leaves, stems, and roots within the Limit of Work is to be reused in place or removed and disposed of off-site. Under no circumstances is soil infested with invasive plant biomass, stems, and roots to be re-located elsewhere on the project site. Any removed infested soils will require transportation to an appropriate disposal facility.

C. Any soil infested with Japanese knotweed, including plant leaves, stems, and roots within the Limit of Work, is to be removed and disposed of off-site. Under no circumstances is soil infested with Japanese knotweed to be reused on site and will require transportation to an appropriate disposal facility.

D. Related Sections:
   1. Section 31 20 00 – Earth Moving
   2. Section 31 10 00 – Site Clearing
   3. Section 31 25 00 – Erosion and Sediment Control
   4. Section 32 91 19 – Landscape Grading
   5. Section 32 92 19 – Seeding
   6. Section 32 93 00 – Plants

E. Review and follow all items within the Woburn Conservation Commission Order of Conditions DEP# 348-867.

1.2 COORDINATION

A. Meeting: A meeting is to be held at the site prior to commencement of any site work to discuss invasive species control activities. The earthwork contractor, the invasive management specialist, the landscape contractor, and the landscape architect or environmental scientist must be present at this meeting.

B. Approach: The approach to invasive management is to be tied into the construction sequence, with three treatment occurrences and site monitoring. Times of treatment are given to align with site earth work and planting. Methods used for treatment are at the discretion of the contractor but must be approved. Coordinate with the Owner and Landscape Architect to confirm schedule and approaches prior to commencing work under this Section.

C. Approvals: The Work Plan and Schedule must be approved by the Woburn Conservation Commission (Commission) prior to any work beginning.

1.3 SUBMITTALS

A. Work Plan & Schedule: Schedule and management techniques to be used to treat invasive species within the limit of work during construction. Include dates, management techniques, and plan for soil stock piling / transport. Plan must be approved by Landscape Architect or Environmental Scientist before beginning. Plan must be approved by the Conservation Commission as outlined in the Order of Conditions.

B. Herbicide Product Data
   1. Provide the following information:
      a. Material properties – all herbicides must be for aquatic use
      b. Material Safety Data Sheet (MSDS)
   2. Supplier: Name, address, and phone number.
   3. Certification credentials of individual licensed to apply and/or oversee herbicide applications.

C. Manufacturer's Certificate: Certify products meet or exceed the specified requirements.

D. Disposal Facility: Name and address of the facility in which the weed infested soils are to be disposed, only if approved and necessary.

E. Contactor to provide written qualification data for firm and person(s) to be responsible for work to demonstrate their capabilities and experience as outlined in Qualification for invasives removal.

F. Contractor to provide current Massachusetts herbicide applicator certificate of person(s) to perform work where herbicides are to be used.

1.4 CLOSEOUT SUBMITTALS

A. Management Reports: Submit reports with images, descriptions and dates of work performed in compliance with the previously approved Work Plan and Schedule from Section 1.3.A

B. Maintenance: Submit recommended procedures for routine year-round management of invasives previously present on site to owner.
   1. Include strategies for management for both manual & chemical treatment.
   2. Include time of year and schedule for maintenance activities.

1.5 QUALIFICATIONS

A. The selected contractor must have at least one staff member on-site who is trained and certified in invasive plant identification. The contractor may, alternatively, provide a sub-contractor with the required expertise.

B. The selected contractor must have at least one staff member on-site who is trained and certified by the Commonwealth of Massachusetts in herbicide application. The contractor may, alternatively, provide a sub-contractor with the required expertise.

C. The contractor completing the work must have a certificate in invasive management or equivalent.

D. The selected contractor is to have a minimum of five years of documented experience with invasive management including application and use of herbicides.

1.6 DELIVERY, STORAGE AND HANDLING

A. Deliver, handle, and store materials in accordance with supplier's instructions.

B. Do not order or deliver materials until required certificates, product information, supplier information, and facility information has been reviewed and approved by the landscape architect.

PART 2 PRODUCTS

2.1 HERBICIDES FOR CHEMICAL CONTROL

A. All herbicides and chemicals must be for aquatic use.

B. Utilize herbicides for individual species as required.

C. Outline herbicides proposed and percentages / mixtures in Work Plan and Schedule.

PART 3 EXECUTION

3.1 TREATMENT AREA

A. Invasive and nuisance species work on site includes Japanese Knotweed, Asiatic bittersweet, and any understory invasive species (shrub, vine, forb, or grass), and trees under 2” caliper that are identified on the Massachusetts Prohibited Plant List and are within the Limit of Work depicted on the Drawings, regardless of if species is identified on the drawings.

3.2 EXAMINATION

A. Inspect all areas within the Limit of Work. Identify all invasives present and flag large stands of invasive plants.

3.3 PREPARATION

A. A combination invasive species management approach, including mechanical (cutting) and chemical (herbicide) treatment, can be utilized. Verify that soil management and plant treatment techniques are coordinated with site work.

B. Flag all areas where soil should not be reused due to the presence of invasive plants, and specifically where soils are infested with Japanese knotweed. Maintain flags throughout duration of site work.

3.4 INFESTED SOIL STOCKPILE

A. Any infested soil and/or plant material including plant leaves, stems and roots, within the Limit of Work may be re-used in-place or else must be removed and disposed of off-site. Under no circumstances is soil infested with invasive plant biomass, stems, and roots to be re-used in any adjacent areas on the project site. Transportation to an appropriate disposal facility is required for any infested soils removed from the site.

B. Any soil infested with Japanese knotweed, including plant leaves, stems, and roots within the Limit of Work is to be removed and disposed of off-site. Under no circumstances is soil infested with Japanese knotweed to be reused on site and will these infested soils require transportation to an appropriate disposal facility.

C. Establish infested soil stockpile area during erosion controls and site clearing. Under no circumstances is removed biomass of invasive species to be stockpiled on site in undesignated areas. Coordinate with the Landscape Architect and/or Engineer if additional stockpiles are required.

D. Transport soil and invasive material to approved disposal site.

E. If there is a delay in transport or soil, surround the infested soil stockpile area with silt fence and straw bales as required to prevent overland flow from washing into or out of the area. Cover the infested soil stockpile area with black plastic or a tarp to minimize sun exposure to the invasive vegetation biomass.

3.5 INVASIVES MANAGEMENT SEQUENCE

A. FIRST TREATMENT

1. The first treatment is to occur at least two weeks prior to earth work activities in the areas where invasive species have been identified. If applicable based on species and time of year, herbicide is to be applied with a glove or by injection.
2. Treatment Acceptance:
    a. After treatment submit in writing the treatment performed with dates and imags to the Landscape Architect.
    b. The first treatment will be approved when all invasive vegetation has started to die or has been removed from the site. Additional applications or removal may be required. All invasive plant material must be removed from site prior to earth work.

B. SECOND TREATMENT

1. The second treatment must occur after final grades have been set, and before seeding and planting perennials and shrubs. Final grades are to be given at least three weeks to monitor if any invasive plants start to sprout before treatment. Contact the Landscape Architect to review the site prior to treatment. All regrowth from invasive species is to be removed mechanically if small in size or treated with herbicide. Any seeded areas damaged during treatment are to be replaced and amended.
2. Treatment Acceptance:
    a. After treatment, submit in writing the treatment performed with dates and images to the Landscape Architect.
    b. The treatment will be approved when all invasive plants within the treatment zone show signs of mortality, and no regrowth is visible one month after application. Follow-up applications may be required at no additional cost to the Owner if the initial application(s) are found to be only partially effective.

C. REVEGETATION

1. Plant and/or seed all areas as indicated on the Drawings ONLY following confirmation of no regrowth of invasive plants. Individual shoots that sprout amongst replanted vegetation shall be controlled by hand pulling, injection and/or “weed glove” methods only.

D. THIRD TREATMENT

1. The third treatment to occur one month after plants have been planted and site is starting to establish. Visit the site and review if invasive species are starting to emerge. If any are present, remove mechanically or spot treat as outlined in approved work plan. Any plants or seeded areas damaged during treatment are to be replaced. Individual shoots that sprout amongst replanted vegetation shall be controlled by hand pulling, injection and/or “weed glove” methods only.
2. Final Acceptance:
    a. After treatment, submit in writing the treatment performed with dates and images to the Landscape Architect.
    b. Contractor, Landscape Architect and Owner to convene on site one month after third treatment to review.
    c. The treatment will be approved and completed when all invasive plants within the treatment zone one month after application show signs of mortality and no regrowth is visible. Follow-up applications may be required at no additional cost to the Owner if the initial application(s) are found to be only partially effective.

E. MONITORING

1. Monitor all areas within the Limit of Work throughout construction for the appearance of invasive species. If any are present within the limit of work remove as appropriate based on species.

END OF SECTION

PROPERTY OF EARTHSCAPE PLAY INC. - DO NOT COPY. DO NOT DISTRIBUTE.

INSTALLATION INSTRUCTIONS

EARTHSCAPE COLLECTIONS

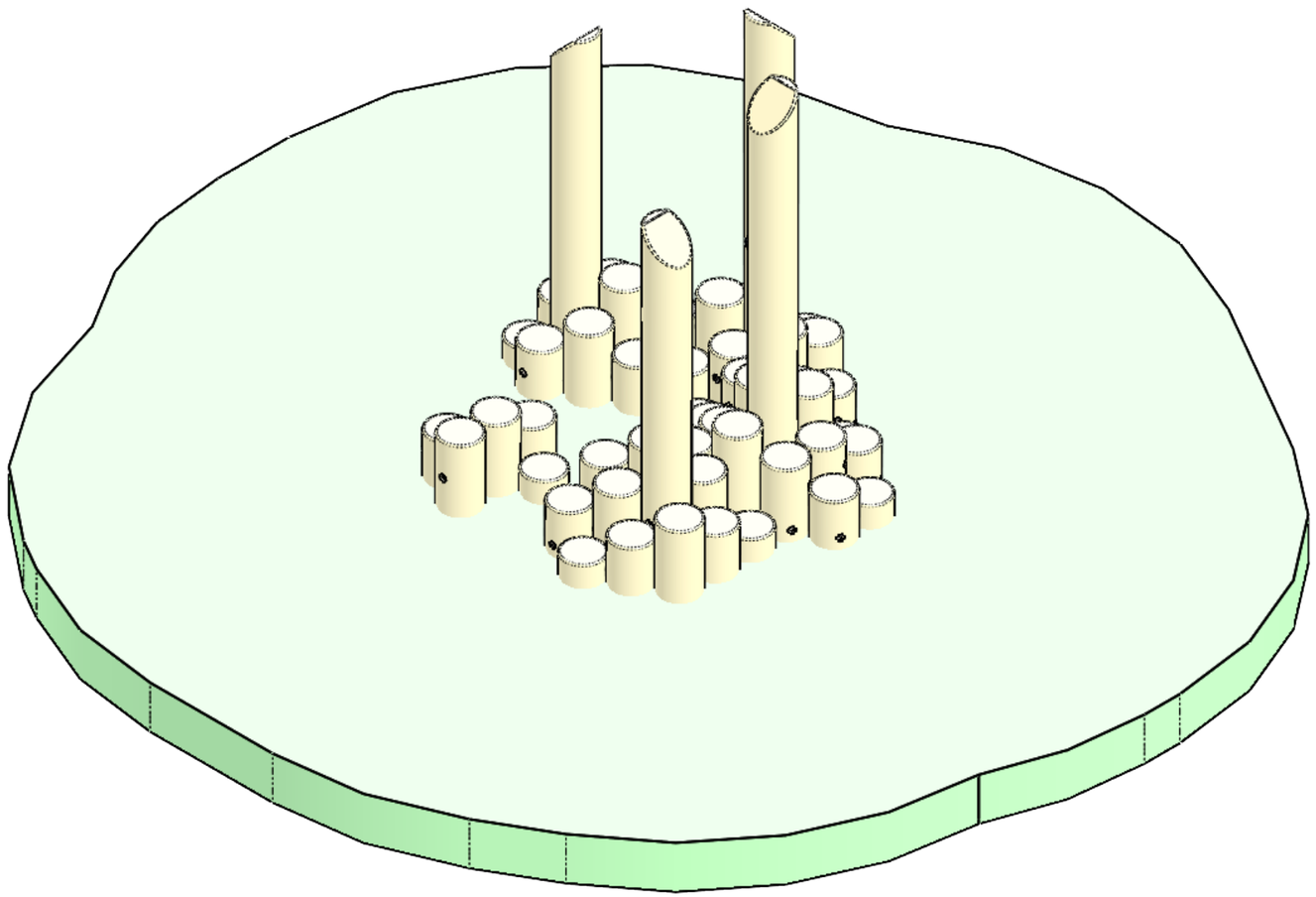

STEPPER CLUSTER M4

THESE INSTRUCTIONS APPLY TO THE FOLLOWING VERSIONS OF THIS PRODUCT:

F00496 - STEPPER CLUSTER M4
(CONCRETE FOUNDATION INSTALL)

NOTE: COLOURS SHOWN ARE REPRESENTATIONAL AND MAY NOT BE THE SAME AS THOSE OF THE SUPPLIED PRODUCT

DATE DOCUMENT RELEASED 2024-09-09
DOCUMENT NUMBER: 1063639-R2

PROPERTY OF EARTHSCAPE PLAY INC. - DO NOT COPY. DO NOT DISTRIBUTE.

SPECIFICATIONS

INTENDED USER AGE GROUP: 18m to 5y
MAXIMUM HEIGHT OF STRUCTURE: 2.74m
MAXIMUM DESIGNATED FALL HEIGHT: 0.60 m
AREA OF SURFACING: 34.9 m²
WEIGHT: 2222 kg

RECOMMENDED INSTALLATION BUFFER

Play equipment requires a variety of offsets to other elements in a playground. The plan view on this page shows the minimum recommended area needed for installing this piece of play equipment by itself. Combining this play equipment with other pieces should be reviewed by a person with a Certified Playground Safety Inspector training.
The offset shown here includes a buffer beyond the CSA requirements to account for fabrication and material variation.

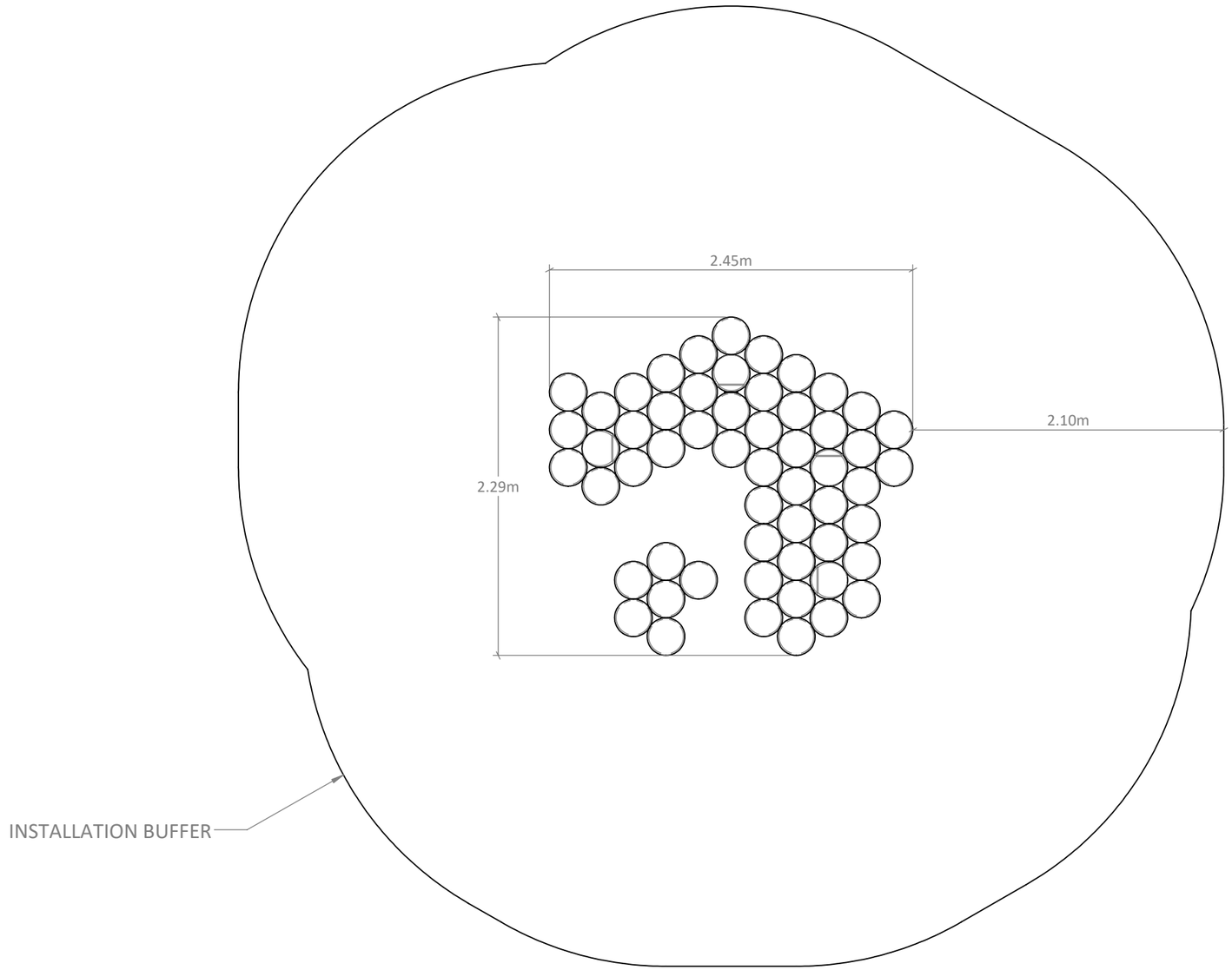

PROPERTY OF EARTHSCAPE PLAY INC. - DO NOT COPY. DO NOT DISTRIBUTE.

ASTM SPECIFICATIONS (FOR INSTALLATIONS AT U.S. SITES ONLY)

STEPPER CLUSTER M4

SPECIFICATIONS

INTENDED USER AGE GROUP: 2 to 5y
MAXIMUM HEIGHT OF STRUCTURE: 9'-0"
MAXIMUM DESIGNATED FALL HEIGHT: 2'-0"
AREA OF SURFACING: 376 ft²
WEIGHT: 4900 lb

RECOMMENDED INSTALLATION BUFFER

Play equipment requires a variety of offsets to other elements in a playground. The plan view on this page shows the minimum recommended area needed for installing this piece of play equipment by itself. Combining this play equipment with other pieces should be reviewed by a person with a Certified Playground Safety Inspector training.
The offset shown here includes a buffer beyond the ASTM requirements to account for fabrication and material variation.

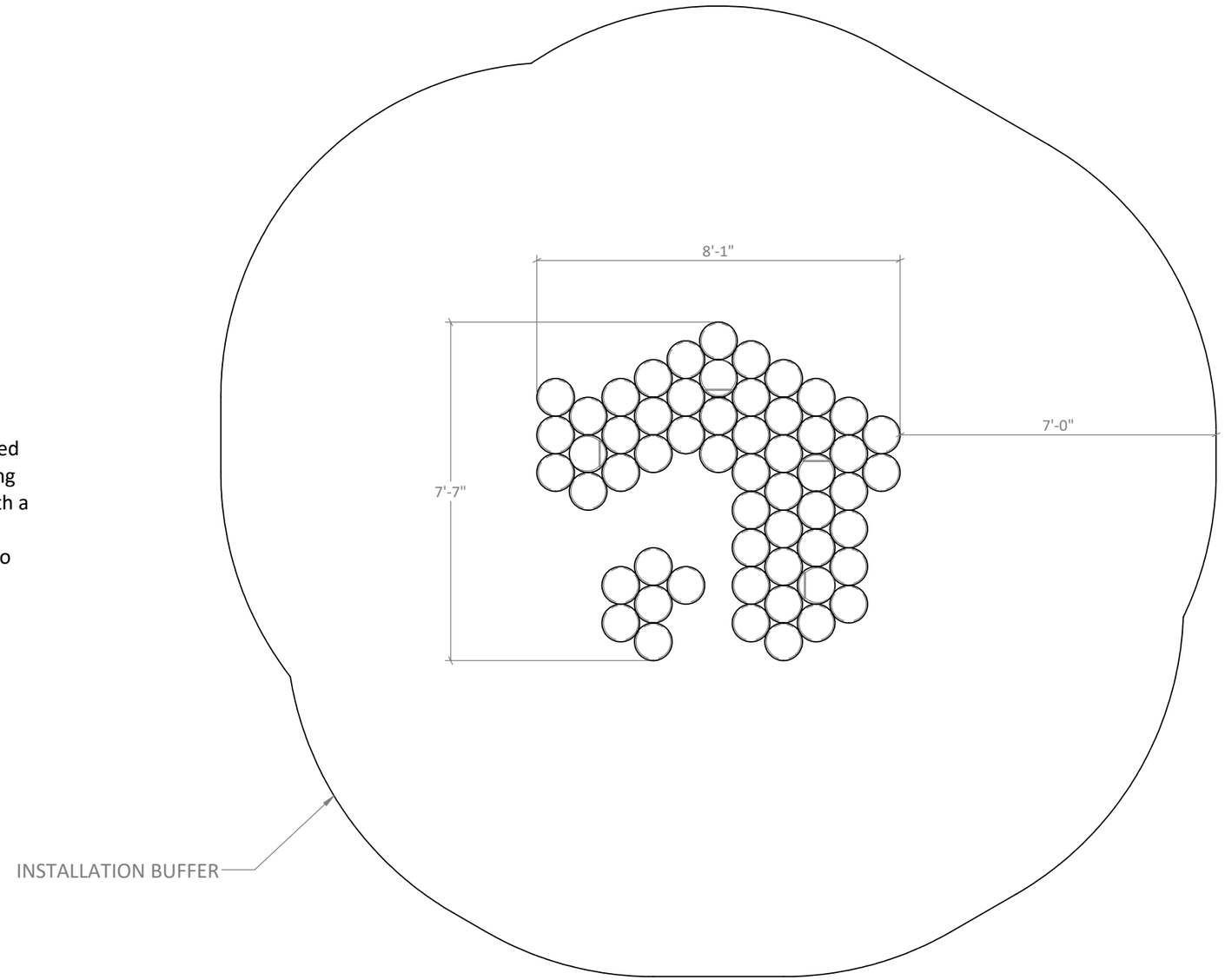

PROPERTY OF EARTHSCAPE PLAY INC. - DO NOT COPY. DO NOT DISTRIBUTE.

PLEASE READ ALL INSTRUCTIONS

Before starting to install this equipment be sure to read through and understand these instructions.
If you have any questions, contact your local dealer for assistance before proceeding.

MEASUREMENTS AND STANDARDS

Measurements have been provided in both metres and [feet-inches]. Ensure to follow standards noted for the location in which this play equipment is being installed. Those marked CSA are to be used in Canada and those marked ASTM to be used in the United States.

LIST OF ABBREVIATIONS

AYC = Alaskan Yellow Cedar
WRC = Western Red Cedar
DPS = Designated Play Surface
SS = Stainless Steel
HDG = Hot Dipped Galvanized
WWM = Welded Wire Mesh
TYP = Typical
C/W = Complete With
UNO = Unless Noted Otherwise
EWF = Engineered Wood Fiber
PIP = Poured-In-Place Rubber Surfacing
PT = Pressure Treated

TOOLS SUPPLIED WITH THIS PRODUCT

No Tools Supplied.

TOOLS THE INSTALLER NEEDS TO SUPPLY

High torque drill
Hammer drill
1/2" impact driver
Set of wood drill bits - up to 1/2"
Set of impact sockets - up to 1"
1/2" ratcheting socket wrench
T25 drive bit
T40 drive bit
Concrete drill bit, 1/2" x 8"
Angle grinder (with course 24 grit sanding disks and metal cut off disks)
Transit or Laser Level
Carpenter's Square
Rigging and lifting straps

EQUIPMENT THE INSTALLER NEEDS TO SUPPLY

Machine to lift and position heaviest element.
Stepper Cluster M4 - Trunk I +/-1030 kg [2275 lbs]

INSTALLER CREW AND TIME REQUIRED

Number of people needed: 2
Typical total person-hours to install: 16 + concrete cure time
Time breakdown:

- 4 hours x 2 people for excavation and pouring concrete
- Time for concrete cure
- 2 hours x 2 people for onsite fabrication and play equipment installation

MATERIALS THE INSTALLER NEEDS TO SUPPLY

Installer to supply materials for preparation, pour and cure of concrete. See Sheets 9 and 10.

WARNINGS

These instructions do not provide specific guidance on the use of tools or the lifting and moving heavy objects. It is assumed that competent people are installing this product who are familiar with using the tools and equipment required and are knowledgeable and skilled at lifting and positioning heavy objects.

PROPERTY OF EARTHSCAPE PLAY INC. - DO NOT COPY. DO NOT DISTRIBUTE.

MAKE SURE YOU HAVE ALL THE PARTS

Examine the equipment and ensure you have all the required parts listed in the table below.

See "As Shipped" Sheet to understand orientation of product as delivered to site.

ITEM NO.	PARTNO	DESCRIPTION	QTY.
1		STEPPER CLUSTER M4 - TRUNK I	1
2		STEPPER CLUSTER M4 - TRUNK II	1
3		STEPPER CLUSTER M4 - TRUNK III	1
4	B00060	6 X 6 DOCK BRACKET V2	10
5	H16685	WOOD SCREW, WASHER HEAD, M8X100, SS	40
6	H60020	TITEN HD 1/2" X 5" CONCRETE SCREW	20

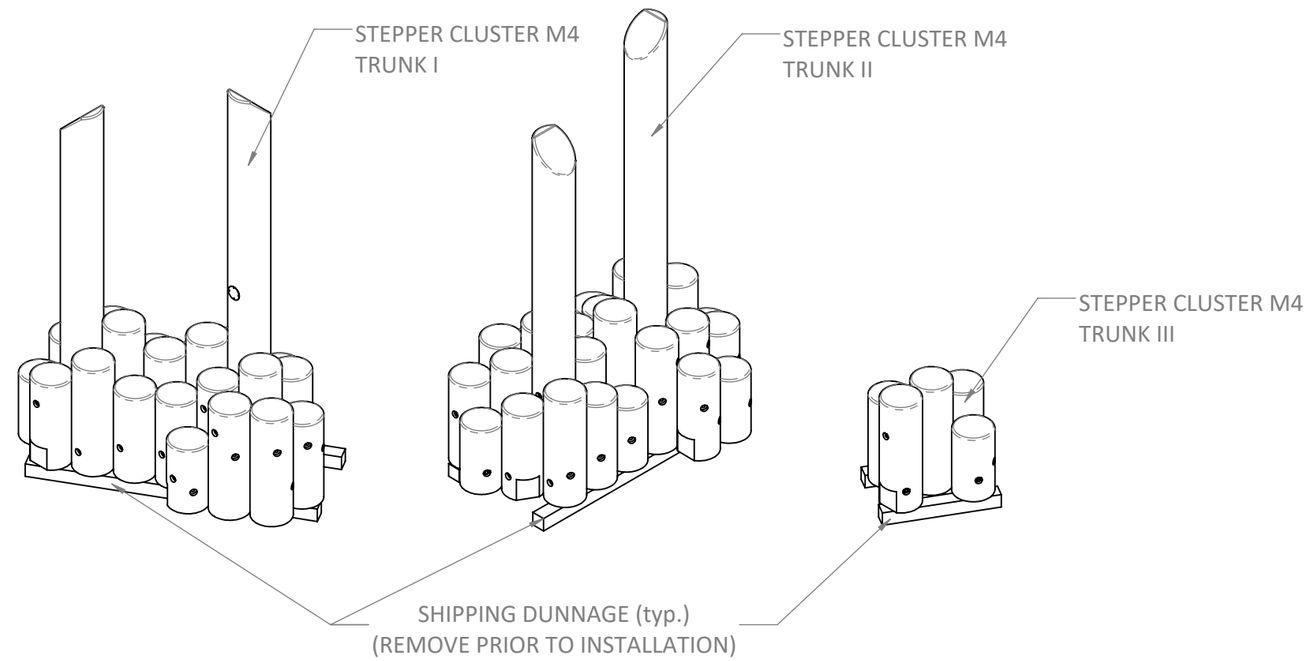

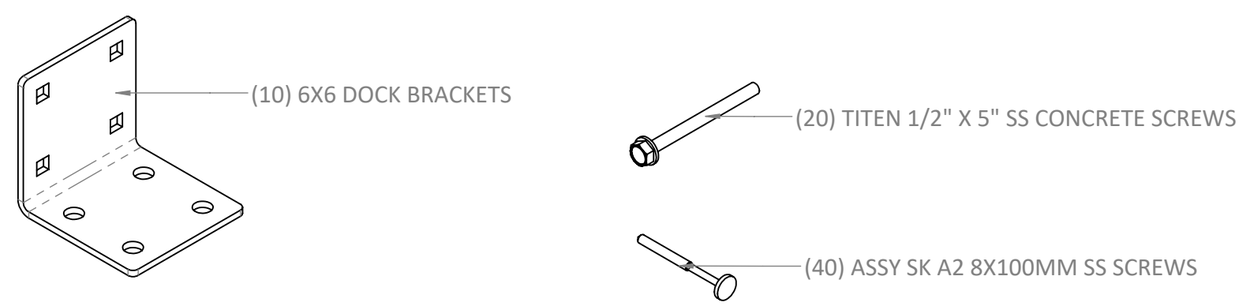

PROPERTY OF EARTHSCAPE PLAY INC. - DO NOT COPY. DO NOT DISTRIBUTE.

AS SHIPPED

STEPPER CLUSTER M4

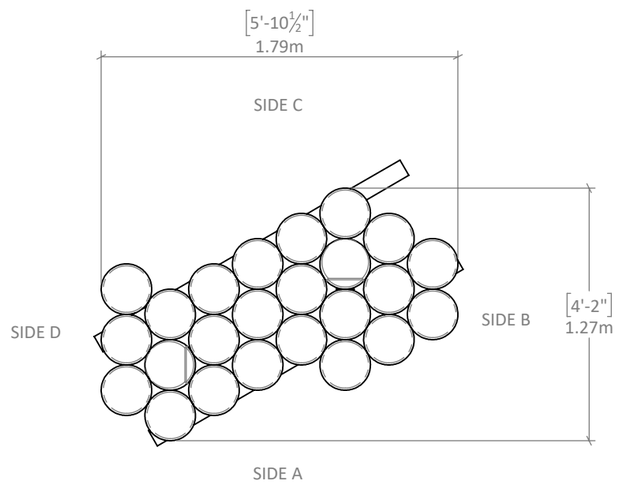

PLAN VIEW

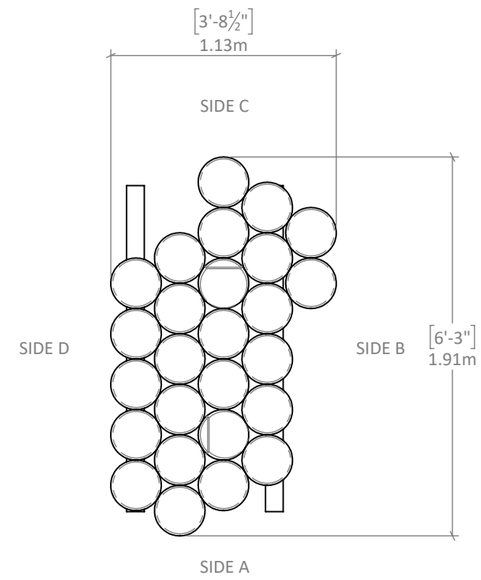

PLAN VIEW

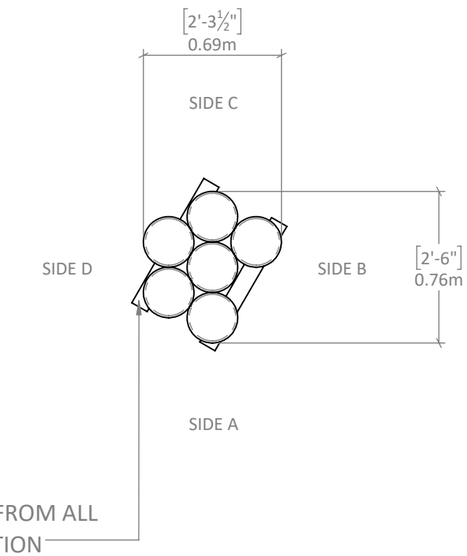

DUNNAGE TO BE REMOVED FROM ALL TRUNKS PRIOR TO INSTALLATION

PLAN VIEW

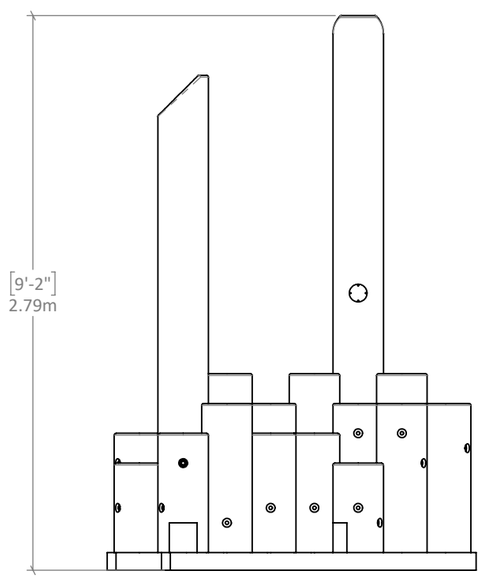

SIDE A

TRUNK I

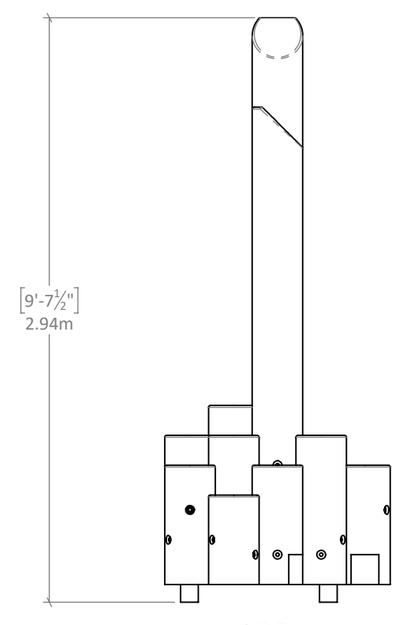

SIDE A

TRUNK II

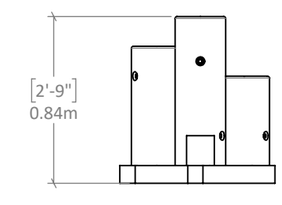

SIDE A

TRUNK III

PROPERTY OF EARTHSCAPE PLAY INC. - DO NOT COPY. DO NOT DISTRIBUTE.

HOW THE PIECES COME TOGETHER

The three pre-assembled Trunks of Stepper Cluster M4 are designed to fit with each other to form the overall finished assembly.
Trunks I and II will sit tightly together to create the majority of the assembly, while Trunk III will remain separate.

See Sheet 12 for assembly order and details.

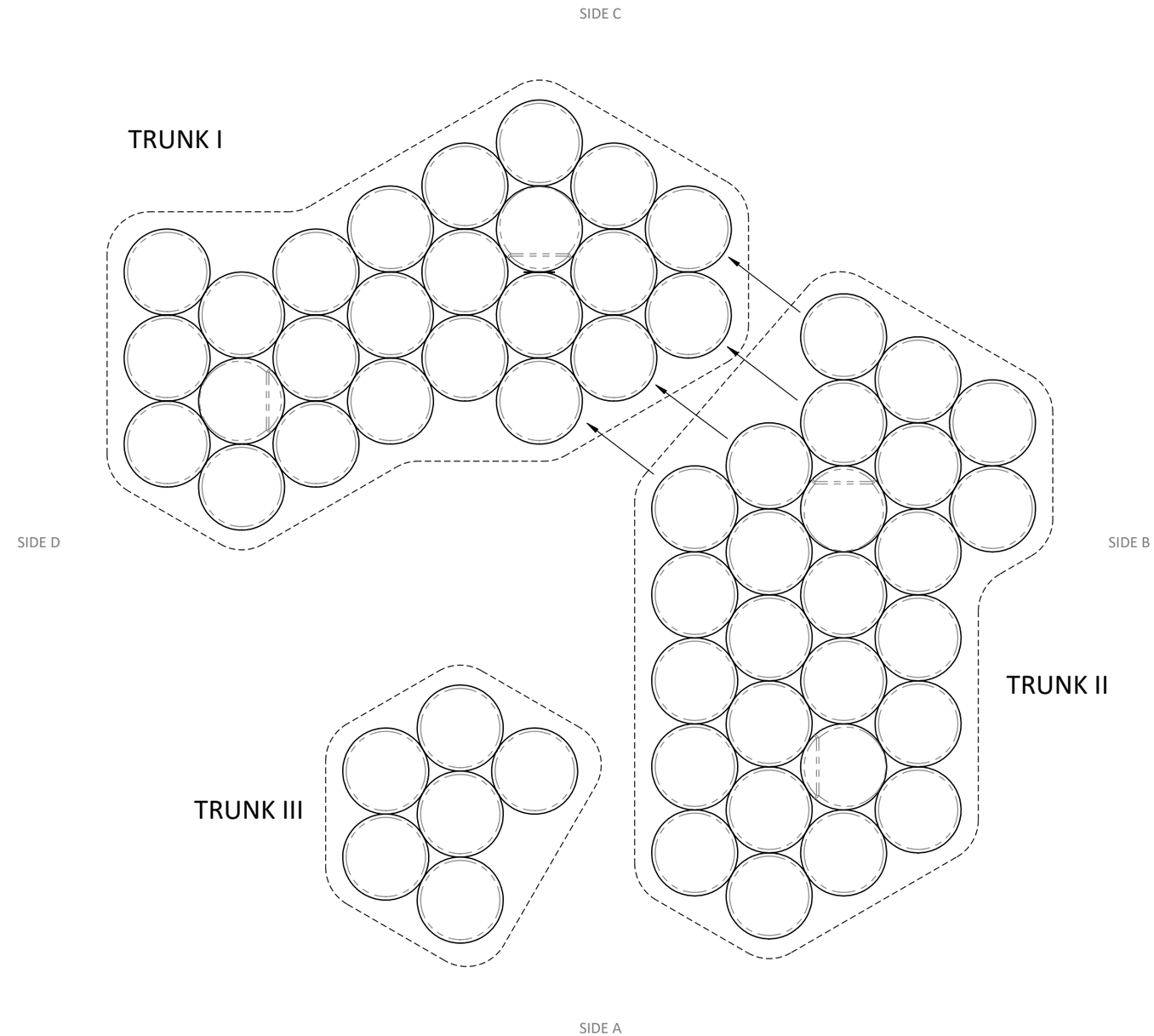

PROPERTY OF EARTHSCAPE PLAY INC. - DO NOT COPY. DO NOT DISTRIBUTE.

WHAT THE FINISHED PRODUCT LOOKS LIKE

Review the overall site layout (by others) to understand the locations and orietnation of the Stepper CLuster M4. The location of the Stepper CLuster M4 in relation to other site elements is not within the scope of these instructions and should be provided by others.

P01 is a poured-in-place concrete pad used to support and anchor Stepper Cluster M4. The concrete pad is to be provided by the installer if a suitable pad is not already provided.

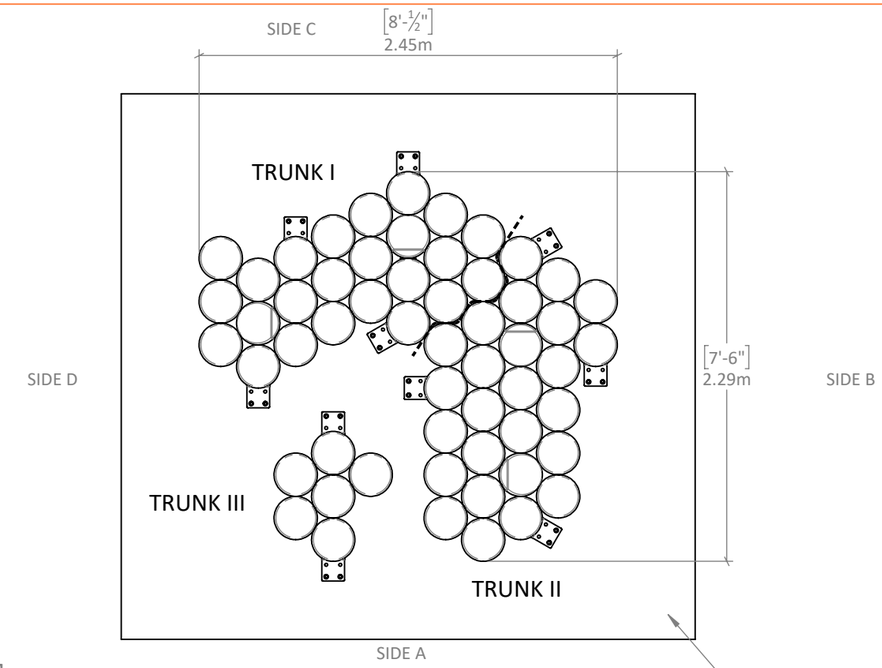

PLAN VIEW

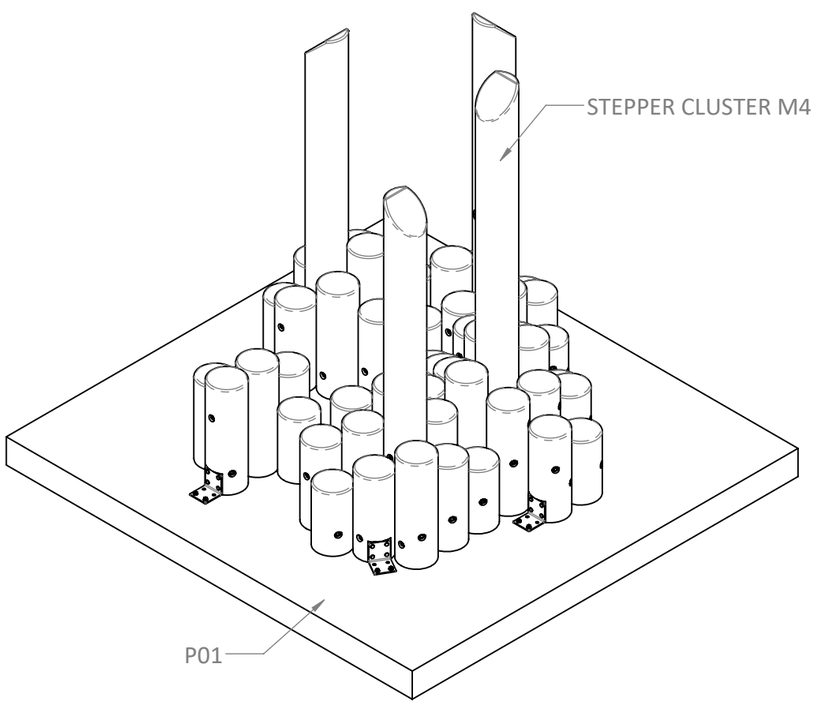

ISOMETRIC VIEW

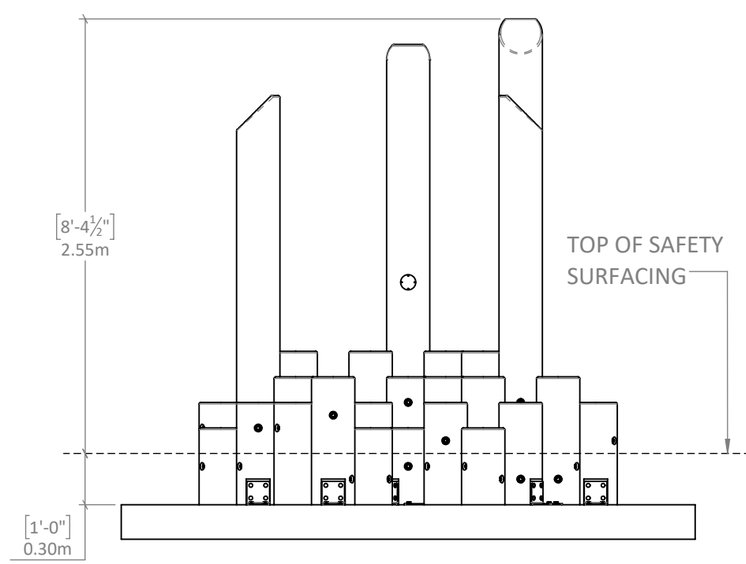

SIDE A

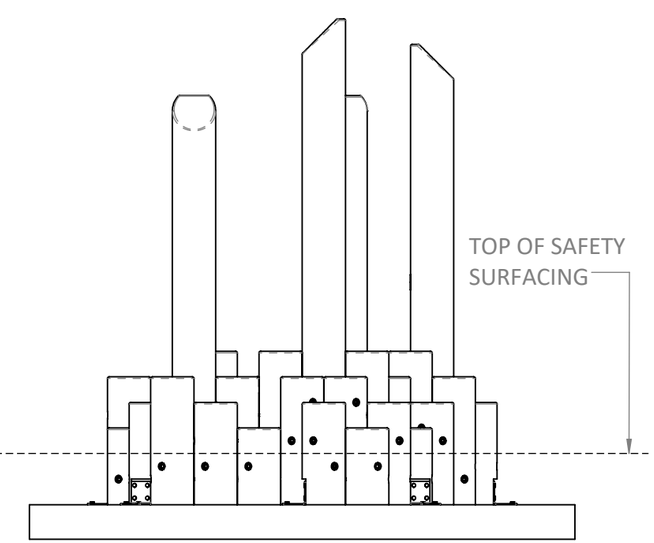

SIDE B

PROPERTY OF EARTHSCAPE PLAY INC. - DO NOT COPY. DO NOT DISTRIBUTE.

LOCATE PLAY EQUIPMENT

STEP 1 - LOCATING THE EQUIPMENT ON SITE

Lay out and mark the location of the the Stepper Cluster M4 Reference Points #1 & #2 on your site. The location of reference points relative to the site is not within the scope of these instructions and should be provided by others.

Reference Point #3 will be used only for final placement and anchoring of Trunk III and is provided here only for reference. See Sheet 12.

Ensure you know what the designed elevation is for the finished safety surface. All heights provided in these instructions will be relative to the finished safety surface. The finished surface elevation is not within the scope of these instructions and should be provided by others.

Ensure sufficient space is provided around Stepper Cluster M4 to maintain installation buffer as detailed in CSA or ASTM Specifications (sheet 2 & 3, as relevant to install location) when installed as a standalone unit.
Refer to project site plan when installed as a part of larger playground.

STEP 2 - LAYOUT CONCRETE PAD

Lay out and mark the outer edge of the concrete pad based off the dimensions provided in the Footing Plan View.

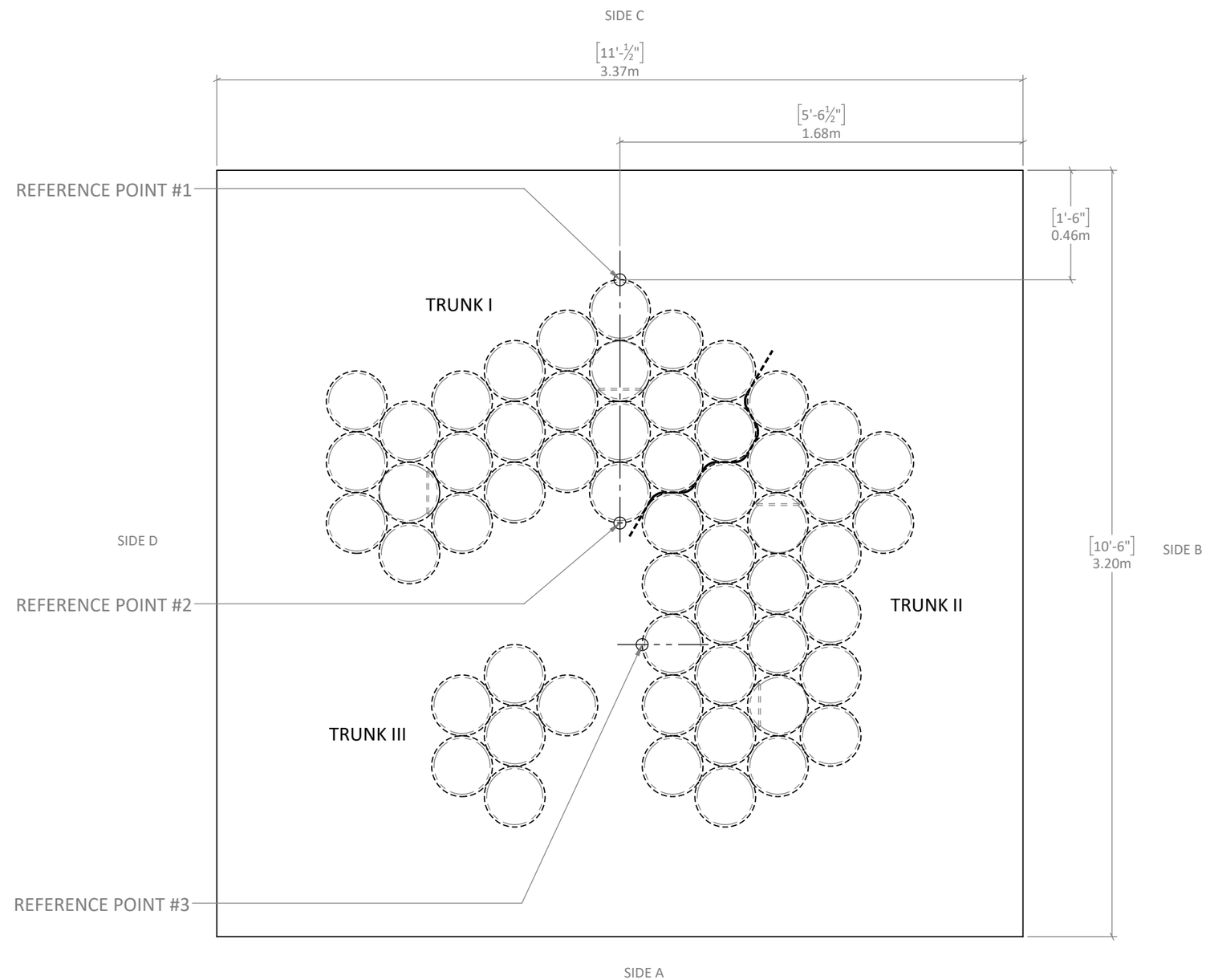

FOOTING PLAN VIEW

PROPERTY OF EARTHSCAPE PLAY INC. - DO NOT COPY. DO NOT DISTRIBUTE.

STEP 3 - EXCAVATE FOR CONCRETE PAD

Excavate area and prepare as per Concrete Placement Detail SD-001D on this sheet.

The foundation detail provided in these instructions has been developed assuming typical soil conditions specified in General Notes. If the subgrade encountered does not meet these conditions, the subgrade must be improved or revisions made to this detail. Revisions to the detail are the responsibility of the installer and it is strongly recommended any changes be reviewed and approved by a licensed professional engineer.

FOUNDATION NOTES:

1. SEE "GENERAL NOTES" SHEET FOR GENERAL NOTES.
2. TOP OF CONCRETE TO BE SET AT 300mm [12"] BELOW TOP OF SURFACING UNO.
3. SLAB TO BEAR ON MATERIAL BELOW THE FROST DEPTH, OR ALTERNATIVELY ON 300mm [12"] OF FREE DRAINING AGGREGATE, COMPACTED TO 98% SPDD.
4. CROSS SECTION ONLY. SEE PROJECT DRAWINGS FOR FOUNDATION SIZE, LAYOUT AND ADDITIONAL REBAR.

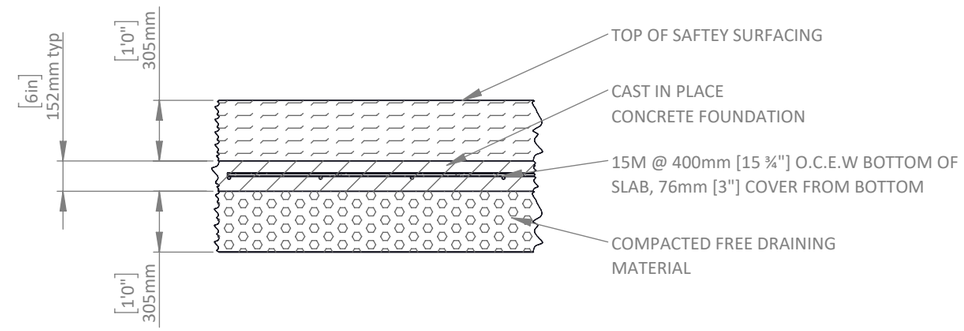

CONCRETE FOUNDATION DETAIL SD-001D

STEP 4 - POUR CONCRETE PAD

Pour concrete pad as per Concrete Placement Detail SD-001D on this sheet.
Ensure top of concrete is 300mm [12"] below finished safety surface.
Allow concrete to cure prior to proceeding to Step 5.

PROPERTY OF EARTHSCAPE PLAY INC. - DO NOT COPY. DO NOT DISTRIBUTE.

INSTALL DOCK BRACKETS

STEP 5 - INSTALL DOCK BRACKETS

Refer to Plan View drawing on this page for install positions of the Dock Brackets. Note the orientation and identify logs to receive Dock Brackets.

Identify the flat face cut into the base of indicated logs and install dock brackets such that the vertical of the dock bracket sits flush against it, with no portion protruding out from the uncut face of the log. The horizontal of the dock bracket should sit flush with the base of the Stepper Cluster L5 extending away from the log. See Detail A.

Fasten each dock bracket to the log using (4) Assy SK A2 8x100mm SS screws.

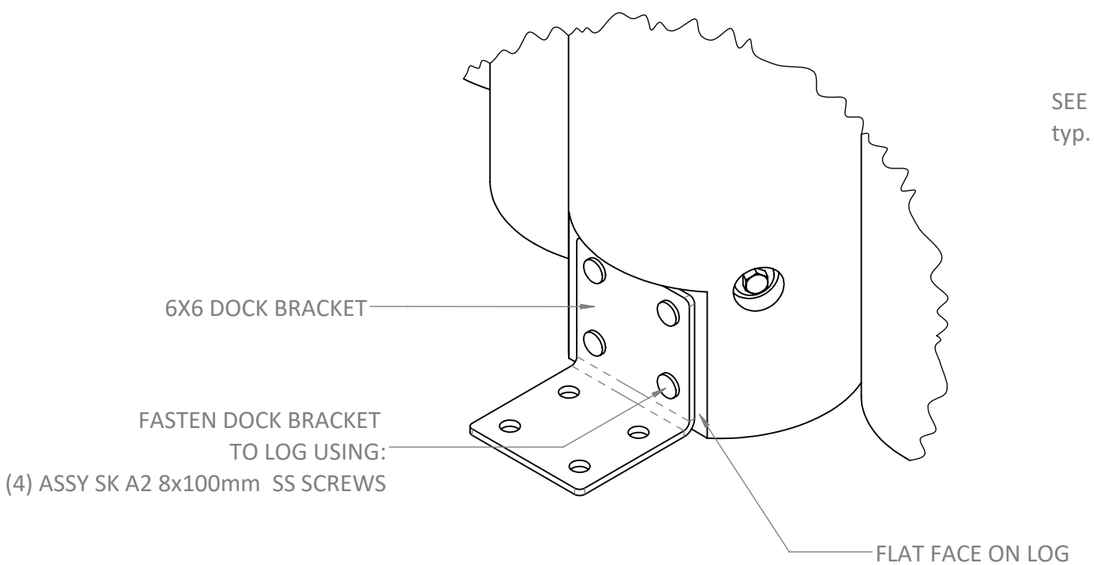

DETAIL A

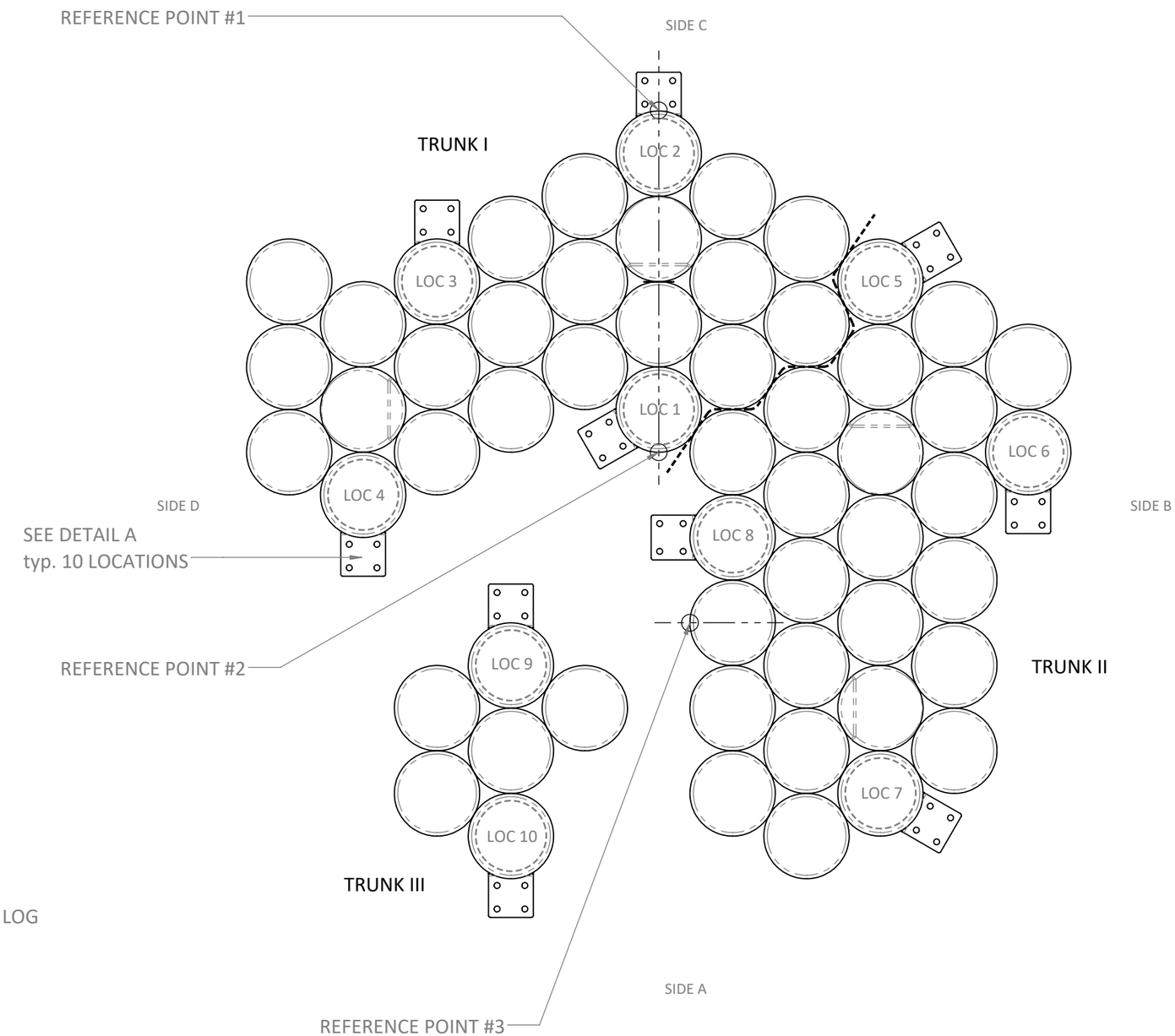

PLAN VIEW

PROPERTY OF EARTHSCAPE PLAY INC. - DO NOT COPY. DO NOT DISTRIBUTE.

SECURE STEPPER CLUSTER ON PAD

STEP 6 - SECURE STEPPER CLUSTER TO CONCRETE PAD

Ensure shipping dunnage has been removed from all Trunks.

Position the three Trunks of Stepper Cluster M4 on concrete pad P01 as per plan view on this sheet, using Reference Points marked on Stepper Cluster M4 and on site. Ensure Trunks I and II are as tightly aligned as possible.

Anchor the Dock Brackets to the concrete pad as per Detail B on this sheet. Total of 10 locations.

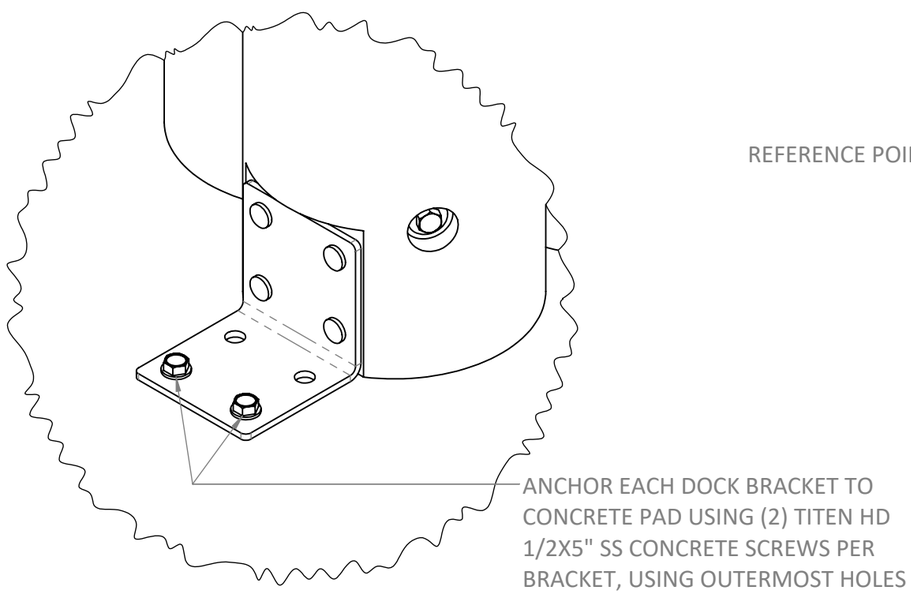

DETAIL B

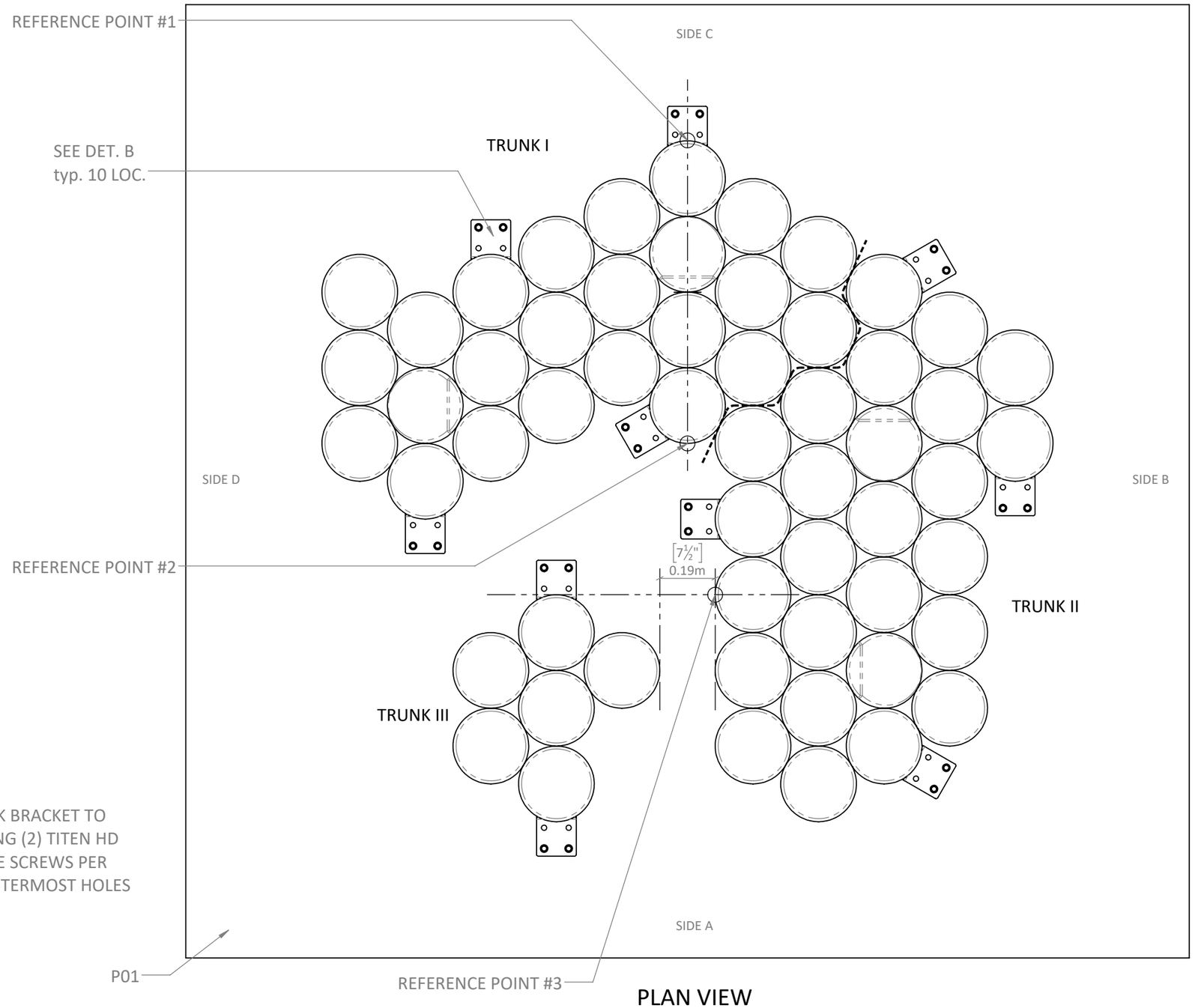

PLAN VIEW

PROPERTY OF EARTHSCAPE PLAY INC. - DO NOT COPY. DO NOT DISTRIBUTE.

GENERAL NOTES

STEPPER CLUSTER M4

FOR CANADIAN INSTALLATION SITES USE THESE NOTES

GENERAL NOTES

1. THIS DRAWING IS THE PROPERTY OF EARTHSCAPE. DO NOT COPY OR DISTRIBUTE WITHOUT PERMISSION.
2. EARTHSCAPE RESERVES OWNERSHIP OF ALL DRAWINGS, SPECIFICATIONS, AND OTHER DOCUMENTS, INCLUDING THOSE IN ELECTRONIC FORM, AUTHORED BY EARTHSCAPE. UPON SIGNING CONTRACT, EARTHSCAPE GRANTS THE OWNER LIMITED LICENSE TO USE THE INSTRUMENTS OF SERVICE SOLELY FOR USING AND MAINTAINING, OR ADDING TO THE PROJECT
3. ENGINEERING AND STRUCTURAL REVIEW: EARTHSCAPE PROVIDES STAMPED DRAWINGS AND/OR STRUCTURAL LOAD TESTING FOR ONTARIO, AS REQUIRED BY CSA Z614. LOCAL ENGINEERING APPROVAL FOR JURISDICTIONS OUTSIDE ONTARIO, IF REQUIRED, TO BE PROVIDED BY OTHERS.
4. EARTHSCAPE DESIGNS AND ENGINEERS FOR A FROST PENETRATION DEPTH OF 1200mm. SLAB ON GRADE CONSTRUCTION IS SUBJECT TO FROST MOVEMENTS. FREE DRAINING SOIL UNDER THE FOOTING IS USED TO MINIMIZE FROST EFFECTS. OVERALL TOWER/SLAB MOVEMENT MAY OCCUR.
5. INSPECTION AND TESTING: INSPECTION, TESTING (INCLUDING CONCRETE TESTING), PRE-CONSTRUCTION SURVEYS TO BE COMPLETED BY OTHERS.
6. SURFACING: WHEN AN IMPACT-ABSORBING SURFACE MATERIAL IS REQUIRED, IT MUST COMPLY WITH CSA Z614 (MOST RECENT EDITION) FOR THE DEFINED FALL HEIGHT OF THE EQUIPMENT SPECIFIED IN DRAWINGS BY EARTHSCAPE OR A CONTRACTUALLY OBLIGATED CRITICAL HEIGHT SPECIFIED IN ADVANCE. ENSURE USE ZONES, SAFETY ZONES, AND/OR PROTECTIVE SURFACING ZONES AROUND ALL PLAY EQUIPMENT ARE COMPLIANT WITH CSA Z614 (MOST RECENT EDITION) - BY OTHERS.
7. SURVEY AND FACILITIES: SURVEY WORK INCLUDING BENCHMARKS, LINES AND LEVELS, PRE-CONSTRUCTION SURVEY, AS-BUILT DRAWINGS BY OTHERS
8. THESE DRAWINGS ARE INTENDED TO BE PRINTED AT 11" X 17" PAGE SIZE. DO NOT SCALE
9. ALL MEASUREMENTS ARE IN METRES (m) UNLESS OTHERWISE STATED
10. EQUIPMENT SHALL COMPLY WITH THE REQUIREMENTS OF CAN/CSA-Z614 (MOST RECENT EDITION) "CHILDREN'S PLAYSPACES AND EQUIPMENT"
11. VISUAL DETAILS INCLUDING BUT NOT LIMITED TO: NET SPACING, ROPE APPEARANCE AND COLOURS ARE FOR CONCEPTUAL PURPOSES ONLY
12. ALWAYS WEAR PROPER PPE AND FOLLOW SAFE PRACTICES.
13. ALL WORK SHALL BE COMPLETED IN ACCORDANCE WITH THE OCCUPATIONAL HEALTH AND SAFETY ACT.
14. CONTRACTOR IS RESPONSIBLE FOR CONFIRMING ALL SITE CONDITIONS AND REPORTING DISCREPENCIES TO EARTHSCAPE IMMEDIATELY.
15. EARTHSCAPE IS NOT RESPONSIBLE FOR THIRD PARTY USE OF THESE DRAWINGS

FASTENERS:

1. METRIC/IMPERIAL DIAMETER CONVERSIONS OF TYPICAL SIZES:
    1. 8mm=5/16", 10mm=3/8", 12mm=1/2", 25mm=1"
    2. ROUND UP TO NEAREST STANDARD LENGTH FOR MANUFACTURER
2. ALL FASTENERS ARE TO BE STAINLESS STEEL (UNLESS OTHERWISE NOTED)
3. ALL BOLT HOLES SHALL BE PRE-DRILLED AND SHALL BE NOT LESS THAN 1mm AND NOT GREATER THAN 2mm LARGER THAN THE NOMINAL HOLE DIAMETER
4. FOR PARTIALLY THREADED SCREWS, EMBED FULL THREAD INTO SECONDARY MEMBER OR TO A DEPTH AS SPECIFIED ON DRAWINGS.
5. WHERE PRE-DRILLING OF SCREWS IS RECOMMENDED BY THE SCREW MANUFACTURER, HOLE DIAMETER TO BE STRICTLY AS PER MANUFACTURER'S INSTRUCTIONS.
6. DO NOT USE IMPACT DRILLS FOR SCREW INSTALLATION.
7. DO NOT USE A HAMMER TO ENGAGE THE FASTENER WITH THE WOOD.
8. ALL FASTENERS TO BE INSTALLED AS POSITIONED ON DRAWINGS.
9. ALL BOLTED CONNECTIONS ARE TO BE SECURED USING VIBRA-TITE "VC-3" THREAD-LOCKING FLUID OR EQUIVILENT

EXCAVATION AND BACKFILL

1. STRIP ALL TOP SOIL, PAVING, AND DELETERIOUS MATERIAL FROM UNDER FOOTINGS.
2. LOCATE ALL SERVICES PRIOR TO COMPLETING EXCAVATION.
3. ALL FOOTINGS SHALL BE PLACED AT A MINIMUM OF 1200mm BELOW GRADE UNLESS OTHERWISE NOTED ON THE DRAWINGS.
4. SUPPORTING SUBGRADE AND FILL TO HAVE A MINIMUM BEARING CAPACITY OF 150 kPa.
5. ALL FOOTINGS AND SLABS TO BE PLACED ON EITHER NATIVE GRAVEL/SAND/CLAY OR 150mm OF GRANULAR A COMPACTED TO A MINIMUM STANDARD PROCTOR DRY DENSITY OF 98%.
6. BENEATH 150mm TOP LAYER OF COMPACTED GRANULAR A, GRANULAR B FILL CAN BE USED AS REQUIRED PLACED IN MAXIMUM 200mm LIFTS, COMPACTED TO A STANDARD PROCTOR DRY DENSITY OF 96%.
7. CONTRACTOR IS RESPONSIBLE FOR SUPPORT OF EXCAVATIONS DURING CONSTRUCTION AS REQUIRED.

CONCRETE

1. ALL CONCRETE WORK AND MATERIALS SHALL BE IN ACCORDANCE WITH CAN/CSA A23.1/2
2. ALL REINFORCING STEEL TO BE IN ACCORDANCE WITH CAN/CSA A23.1/2 INCLUDING FABRICATION, DETAILING, LAP SPLICES, PLACEMENT, FIXING AND COVER.
3. REINFORCING STEEL SHALL COMPLY WITH CAN/CSA G40.18
4. DO NOT ADD WATER TO CONCRETE ONSITE.
5. ENSURE A MINIMUM COVER OF 75mm TO THE GROUND IN ALL BELOW GRADE CONCRETE.
6. CONCRETE MATERIAL TO BE:
    1. FOOTINGS: CLASS F-2 CONCRETE WITH A MINIMUM 28 DAY COMPRESSIVE STRENGTH OF 25 MPa, MAXIMUM WATER/CEMENT RATIO OF 0.55, MAXIMUM COARSE AGGREGATE SIZE OF 20mm, 4-7% AIR CONTENT, AND A MAXIMUM SLUMP OF 50-100mm.
    2. SLAB ON GRADE: CLASS C-2 CONCRETE WITH A MINIMUM 28 DAY COMPRESSIVE STRENGTH OF 32 MPa, MAXIMUM WATER/CEMENT RATIO OF 0.45, MAXIMUM COARSE AGGREGATE SIZE OF 20mm, 5-8% AIR CONTENT AND A MAXIMUM SLUMP OF 50-100mm.
7. CONCRETE REINFORCING TO DEFORMED MINIMUM YIELD STRENGTH OF 400 MPa
8. PIT RUN GRAVEL WILL NOT BE ACCEPTABLE.
9. ALL REINFORCING CHAIRS SHALL BE PLASTIC
10. ALL FORM OIL TO BE NON-STAINING MINERAL OIL, FREE OF KEROSENE.
11. WELDED WIRE MESH SHALL BE IN ACCORDANCE WITH ASTM A1064.
12. VIBRATE ALL CONCRETE TO ENSURE THAT CONCRETE IS FREE FROM VOIDS AND OTHER DEFECTS.
13. MOIST CURE ALL CONCRETE 7 DAYS.
14. IN HOT OR COLD WEATHER CONDITIONS TAKE ADDITIONAL PRECAUTIONS AS PER CAN/CSA A23.1/2.
15. UNLESS NOTED OTHERWISE, FASTEN ALL HARDWARE TO CONCRETE USING EITHER:
    1. SIMPSON STRONG TIE "TITEN HD" Ø½ X 5" SS CONCRETE SCREW
    2. THREADED ROD WITH SIMPSON STRONG TIE "SET 3G" OR HILTI "HY-200" EPOXY.
    3. REFER TO RESPECTIVE MANUFACTURER's INSTRUCTIONS FOR INSTALLATION PROCEDURE

FOR U.S. INSTALLATION SITES USE THESE NOTES

GENERAL NOTES

1. THIS DRAWING IS THE PROPERTY OF EARTHSCAPE. DO NOT COPY OR DISTRIBUTE WITHOUT PERMISSION.
2. EARTHSCAPE RESERVES OWNERSHIP OF ALL DRAWINGS, SPECIFICATIONS, AND OTHER DOCUMENTS, INCLUDING THOSE IN ELECTRONIC FORM, AUTHORED BY EARTHSCAPE. UPON SIGNING CONTRACT, EARTHSCAPE GRANTS THE OWNER LIMITED LICENSE TO USE THE INSTRUMENTS OF SERVICE SOLELY FOR USING AND MAINTAINING, OR ADDING TO THE PROJECT
3. ENGINEERING AND STRUCTURAL REVIEW: EARTHSCAPE PROVIDES STAMPED DRAWINGS AND/OR STRUCTURAL LOAD TESTING FOR ONTARIO, AS REQUIRED BY ASTM F-1487-17. LOCAL ENGINEERING APPROVAL FOR JURISDICTIONS OUTSIDE ONTARIO, IF REQUIRED, TO BE PROVIDED BY OTHERS.
4. EARTHSCAPE DESIGNS AND ENGINEERS FOR A FROST PENETRATION DEPTH OF 48". SLAB ON GRADE CONSTRUCTION IS SUBJECT TO FROST MOVEMENTS. FREE DRAINING SOIL UNDER THE FOOTING IS USED TO MINIMIZE FROST EFFECTS. OVERALL TOWER/SLAB MOVEMENT MAY OCCUR.
5. INSPECTION AND TESTING: INSPECTION, TESTING (INCLUDING CONCRETE TESTING), PRE-CONSTRUCTION SURVEYS TO BE COMPLETED BY OTHERS.
6. SURFACING: WHEN AN IMPACT-ABSORBING SURFACE MATERIAL IS REQUIRED, IT MUST COMPLY WITH ASTM F-1292 (MOST RECENT EDITION) FOR THE DEFINED FALL HEIGHT OF THE EQUIPMENT SPECIFIED IN DRAWINGS BY EARTHSCAPE OR A CONTRACTUALLY OBLIGATED CRITICAL HEIGHT SPECIFIED IN ADVANCE. ENSURE USE ZONES, SAFETY ZONES, AND/OR PROTECTIVE SURFACING ZONES AROUND ALL PLAY EQUIPMENT ARE COMPLIANT WITH ASTM F-1292 (MOST RECENT EDITION) - BY OTHERS.
7. SURVEY AND FACILITIES: SURVEY WORK INCLUDING BENCHMARKS, LINES AND LEVELS, PRE-CONSTRUCTION SURVEY, AS-BUILT DRAWINGS BY OTHERS
8. THESE DRAWINGS ARE INTENDED TO BE PRINTED AT 11" X 17" PAGE SIZE. DO NOT SCALE
9. ALL MEASUREMENTS ARE IN FEET-INCHES UNLESS OTHERWISE STATED
10. EQUIPMENT SHALL COMPLY WITH THE REQUIREMENTS OF ASTM F1487-17 "STANDARD CONSUMER SAFETY PERFORMANCE SPECIFICATION FOR PLAYGROUND EQUIPMENT"
11. VISUAL DETAILS INCLUDING BUT NOT LIMITED TO: NET SPACING, ROPE APPEARANCE AND COLOURS ARE FOR CONCEPTUAL PURPOSES ONLY
12. ALWAYS WEAR PROPER PPE AND FOLLOW SAFE PRACTICES.
13. ALL WORK SHALL BE COMPLETED IN ACCORDANCE WITH THE OCCUPATIONAL HEALTH AND SAFETY ACT.
14. CONTRACTOR IS RESPONSIBLE FOR CONFIRMING ALL SITE CONDITIONS AND REPORTING DISCREPENCIES TO EARTHSCAPE IMMEDIATELY.
15. EARTHSCAPE IS NOT RESPONSIBLE FOR THIRD PARTY USE OF THESE DRAWINGS

FASTENERS

1. METRIC/IMPERIAL DIAMTER CONVERSIONS:
    1. 8mm=5/16", 10mm=3/8", 12mm=1/2", 25mm=1"
    2. ROUND UP TO NEAREST STANDARD LENGTH FOR MANUFACTURER
2. ALL FASTENERS ARE TO BE STAINLESS STEEL (UNLESS OTHERWISE NOTED)
3. ALL BOLT HOLES SHALL BE PRE-DRILLED AND SHALL BE NOT LESS THAN 3/64" AND NOT GREATER THAN 5/64" LARGER THAN THE NOMINAL HOLE DIAMETER
4. FOR PARTIALLY THREADED SCREWS, EMBED FULL THREAD INTO SECONDARY MEMBER OR TO A DEPTH AS SPECIFIED ON DRAWINGS.
5. WHERE PRE-DRILLING OF SCREWS IS RECOMMENDED BY THE SCREW MANUFACTURER, HOLE DIAMETER TO BE STRICTLY AS PER MANUFACTURER'S RECOMMENDATIONS.
6. DO NOT USE IMPACT DRILLS FOR SCREW INSTALLATION.
7. DO NOT USE A HAMMER TO ENGAGE THE FASTENER WITH THE WOOD.
8. ALL FASTENERS TO BE INSTALLED AS POSITIONED ON SHOP DRAWINGS.
9. ALL BOLTED CONNECTIONS ARE TO BE SECURED USING VIBRA-TITE "VC-3" THREAD-LOCKING FLUID OR EQUIVILENT

EXCAVATION AND BACKFILL

1. STRIP ALL TOP SOIL, PAVING, AND DELETERIOUS MATERIAL FROM UNDER FOOTINGS.
2. LOCATE ALL SERVICES PRIOR TO COMPLETING EXCAVATION.
3. ALL FOOTINGS SHALL BE PLACED AT A MINIMUM OF 4' BELOW GRADE UNLESS OTHERWISE NOTED ON THE DRAWINGS.
4. SUPPORTING SUBGRADE AND FILL TO HAVE A MINIMUM BEARING CAPACITY OF 3000PSF.
5. ALL FOOTINGS AND SLABS TO BE PLACED ON EITHER NATIVE GRAVEL/SAND/CLAY OR 6" OF GRANULAR A COMPACTED TO A MINIMUM STANDARD PROCTOR DRY DENSITY OF 98%.
6. BENEATH 6" TOP LAYER OF COMPACTED GRANULAR A, GRANULAR B FILL CAN BE USED AS REQUIRED PLACED IN MAXIMUM 8" LIFTS, COMPACTED TO A STANDARD PROCTOR DRY DENSITY OF 96%.
7. CONTRACTOR IS RESPONSIBLE FOR SUPPORT OF EXCAVATIONS DURING CONSTRUCTION AS REQUIRED.

CONCRETE

1. ALL CONCRETE WORK AND MATERIALS SHALL BE IN ACCORDANCE WITH ACI-301
2. ALL REINFORCING STEEL TO BE IN ACCORDANCE WITH ASTM A615 AND ACI-301 INCLUDING FABRICATION, DETAILING, LAP SPLICES, PLACEMENT, FIXING AND COVER.
3. REINFORCING STEEL SHALL COMPLY WITH ASTM A615
4. DO NOT ADD WATER TO CONCRETE ONSITE.
5. ENSURE A MINIMUM COVER OF 3" TO THE GROUND IN ALL BELOW GRADE CONCRETE.
6. CONCRETE MATERIAL TO BE:
    1. FOOTINGS AND SLABS: CONCRETE WITH A MINIMUM 28 DAY COMPRESSIVE STRENGTH OF 4000 PSI, MAXIMUM WATER/CEMENT RATIO OF 0.50, MAXIMUM COARSE AGGREGATE SIZE OF 3/4", 4-7% AIR CONTENT (WHERE CONCRETE PLACED ABOVE FROST), AND A MAXIMUM SLUMP OF 2 - 4 INCHES.
7. CONCRETE REINFORCING TO DEFORMED MINIMUM YIELD STRENGTH OF 58000 PSI
8. PIT RUN GRAVEL WILL NOT BE ACCEPTABLE.
9. ALL REINFORCING CHAIRS SHALL BE PLASTIC
10. ALL FORM OIL TO BE NON-STAINING MINERAL OIL, FREE OF KEROSENE.
11. WELDED WIRE MESH SHALL BE IN ACCORDANCE WITH ASTM A1064.
12. VIBRATE ALL CONCRETE TO ENSURE THAT CONCRETE IS FREE FROM VOIDS AND OTHER DEFECTS.
13. MOIST CURE ALL CONCRETE 7 DAYS.
14. IN HOT OR COLD WEATHER CONDITIONS TAKE ADDITIONAL PRECAUTIONS AS PER ACI 305 OR 306 RESPECTIVELY.
15. UNLESS NOTED OTHERWISE, FASTEN ALL HARDWARE TO CONCRETE USING EITHER:
    1. SIMPSON STRONG TIE "TITEN HD" Ø½ X 5" SS CONCRETE SCREW
    2. THREADED ROD WITH SIMPSON STRONG TIE "SET 3G" OR HILTI "HY-200" EPOXY
    3. REFER TO RESPECTIVE MANUFACTURER'S INSTRUCTIONS FOR INSTALLATION PROCEDURE

PROPERTY OF EARTHSCAPE PLAY INC. - DO NOT COPY. DO NOT DISTRIBUTE.

INSTALLATION INSTRUCTIONS

EARTHSCAPE COLLECTIONS

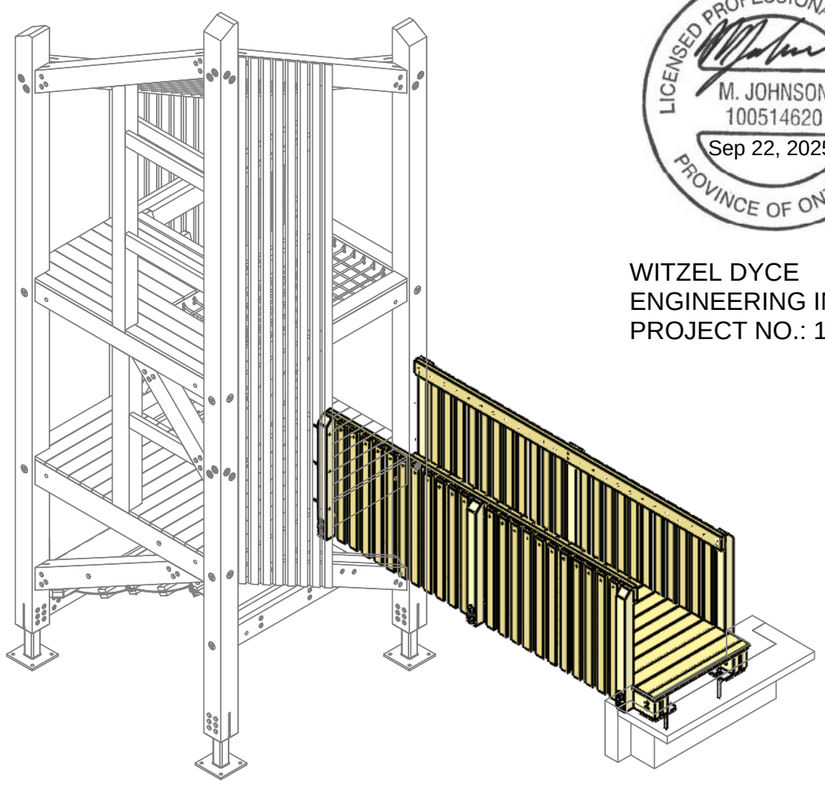

LICENSED PROFESSIONAL ENGINEER
M. JOHNSON
100514620
Sep 22, 2025
PROVINCE OF ONTARIO

WITZEL DYCE
ENGINEERING INC.
PROJECT NO.: 12936-165

MODIFIED TIMBER BRIDGE 12'

THESE INSTRUCTIONS APPLY TO THE FOLLOWING VERSIONS OF THIS PRODUCT:

1209039 - MODIFIED TIMBER BRIDGE 12'

PROJECT NUMBER: ESC0499
DESIGNED FOR: HURLD PARK
TO BE INSTALLED IN: WOBURN, MA

NOTE: COLOURS SHOWN ARE REPRESENTATIONAL AND MAY NOT BE THE SAME AS THOSE OF THE SUPPLIED PRODUCT

FOR CSA AND ASTM SPECIFICATIONS AND GENERAL NOTES SEE MAIN STRUCTURE INSTALLATION PACKAGE

DATE DOCUMENT RELEASED 2025-09-18
DOCUMENT NUMBER: 1209450-R1

PROPERTY OF EARTHSCAPE PLAY INC. - DO NOT COPY. DO NOT DISTRIBUTE.

PLEASE READ ALL INSTRUCTIONS

Before starting to install this equipment be sure to read through and understand these instructions.

If you have any questions, contact your Earthscape Representative for assistance before proceeding.

MEASUREMENTS AND STANDARDS

Measurements have been provided in both metres and [feet-inches]. Ensure to follow standards noted for the location in which this play equipment is being installed. Those marked CSA are to be used in Canada and those marked ASTM to be used in the United States.

LIST OF ABBREVIATIONS

AYC = Alaskan Yellow Cedar
WRC = Western Red Cedar
DPS = Designated Play Surface
SS = Stainless Steel
HDG = Hot Dipped Galvanized
WWM = Welded Wire Mesh
TYP = Typical
C/W = Complete With
UNO = Unless Noted Otherwise
EWF = Engineered Wood Fiber
PIP = Poured-In-Place Rubber Surfacing
PT = Pressure Treated

TOOLS SUPPLIED WITH THIS PRODUCT

- No tools supplied

TOOLS THE INSTALLER NEEDS TO SUPPLY

- High torque drill
- Set of wood drill bits up to 1/2"
- T25 drive bit
- T40 drive bit
- Circular saw
- 1/2" Impact driver
- Socket set up to 1-1/8"
- Hammer Drill
- Concrete drill bit set up to and including size required by epoxy manufacturer to set 3/4" threaded rod 8" deep in concrete abutment
- Angle grinder (With course 24 grit sanding disks and metal cut off disks
- Transit or laser Level
- Rigging and lifting straps

EQUIPMENT THE INSTALLER NEEDS TO SUPPLY

- Machine to lift and position 400 kg [870 lb] pre-assembled wooden bridge.

INSTALLER CREW AND TIME REQUIRED

Number of people needed: 3
Typical total person-hours to install: 3

Time breakdown:
- 1 hours x 3 people to position and anchor the bridge in place

MATERIALS THE INSTALLER NEEDS TO SUPPLY

- Epoxy - Simpson Strong Tie "Set 3G" or Hilti "Hy-200"

WARNINGS

These instructions do not provide specific guidance on the use of tools or the lifting and moving heavy objects. It is assumed that competent people are installing this product who are familiar with using the tools and equipment required and are knowledgeable and skilled at lifting and positioning heavy objects.

PROPERTY OF EARTHSCAPE PLAY INC. - DO NOT COPY. DO NOT DISTRIBUTE.

MAKE SURE YOU HAVE ALL THE PARTS

Examine the equipment and ensure you have all the required parts listed in the table below.

PART IMAGE	ITEM NO.	PART NO.	DESCRIPTION	QTY.
SEE IMAGE THIS SHEET	1	1209039	PRE-ASSEMBLED MODIFIED WOODEN BRIDGE 12'	1
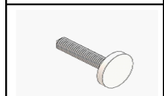	2	H16685	WOOD SCREW, WASHER HEAD M8X100, SS	4
	3	H16687	WOOD SCREW, WASHER HEAD M8X200, SS	6
	4	H20028	THREADED STUD 3/4"X 12" HDG	2
	5	H30080	WASHER 3/4" X 2" HDG	2
	6	H40046	HEX NUT 3/4-10 HDG	4

IMAGES OF FASTENERS IN THIS TABLE ARE REPRESENTATIONAL TO HELP IDENTIFY PARTS.

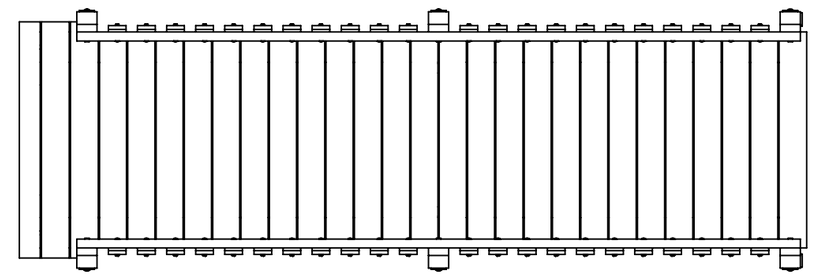

PLAN VIEW

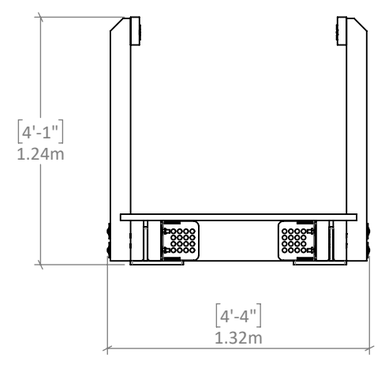

FRONT VIEW

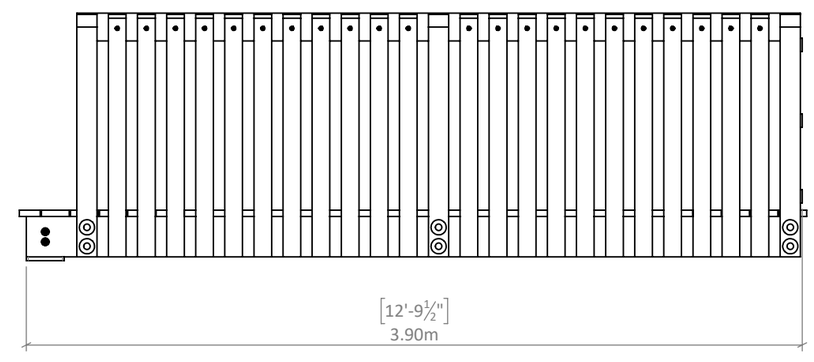

SIDE VIEW

TIMBER BRIDGE SHIPPED PRE-ASSEMBLED AS SHOWN
WEIGHT: 400 KG [870 LB]

PROPERTY OF EARTHSCAPE PLAY INC. - DO NOT COPY. DO NOT DISTRIBUTE.

ABUTMENT DETAILS

ABUTMENT DETAILS OVERVIEW

Before installing the bridge ensure the concrete abutment is cured and matches the specifications shown on this sheet.

Concrete to be provided by installer.

REACTION LOADS

- DL = 250 lbs
- LL = 900 lbs
- Playground loading = 1500 lbs (not to be considered with live load
- SL = 650 lbs
- WL = 625 lbs (perp to bridge)
- EQ = 75 lbs (perp to bridge)

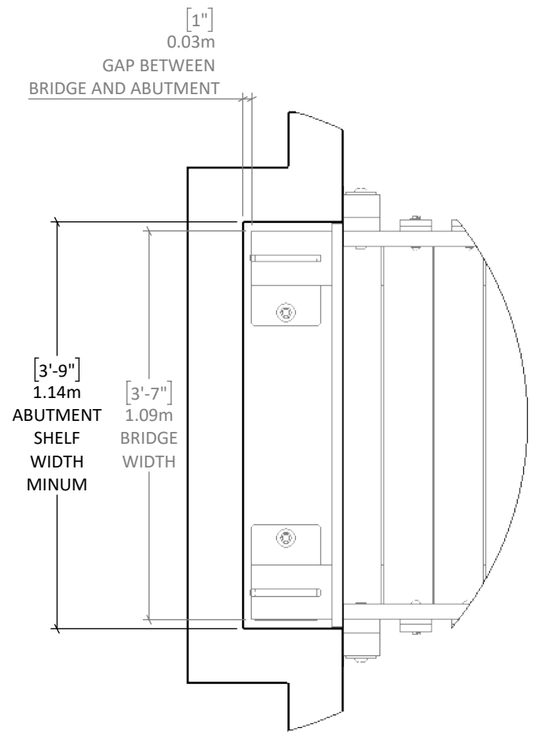

DETAIL A

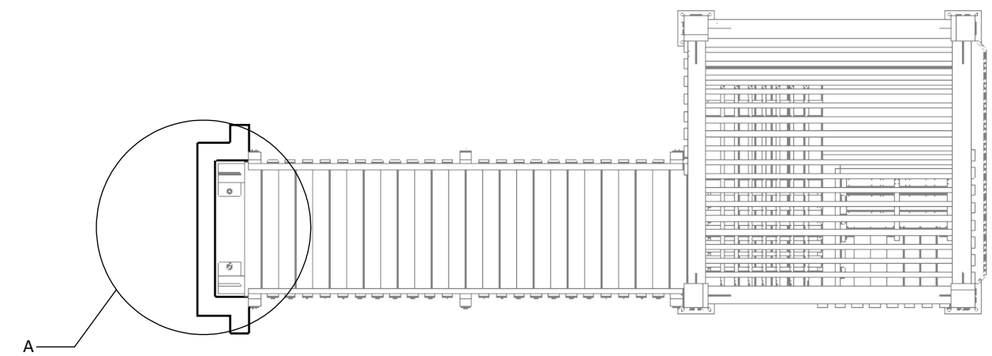

ABUTMENT PLAN VIEW

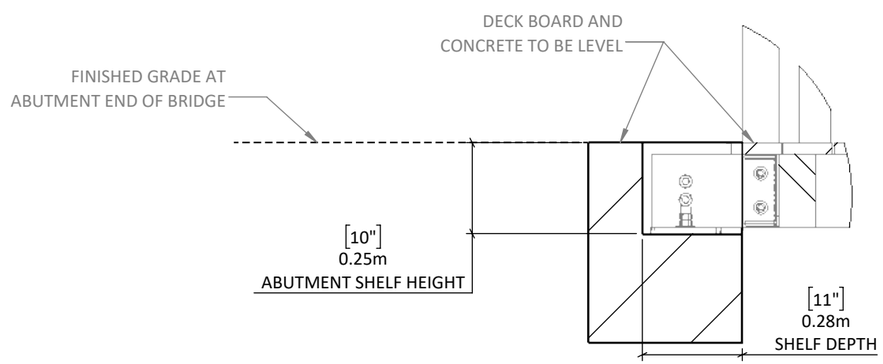

DETAIL B

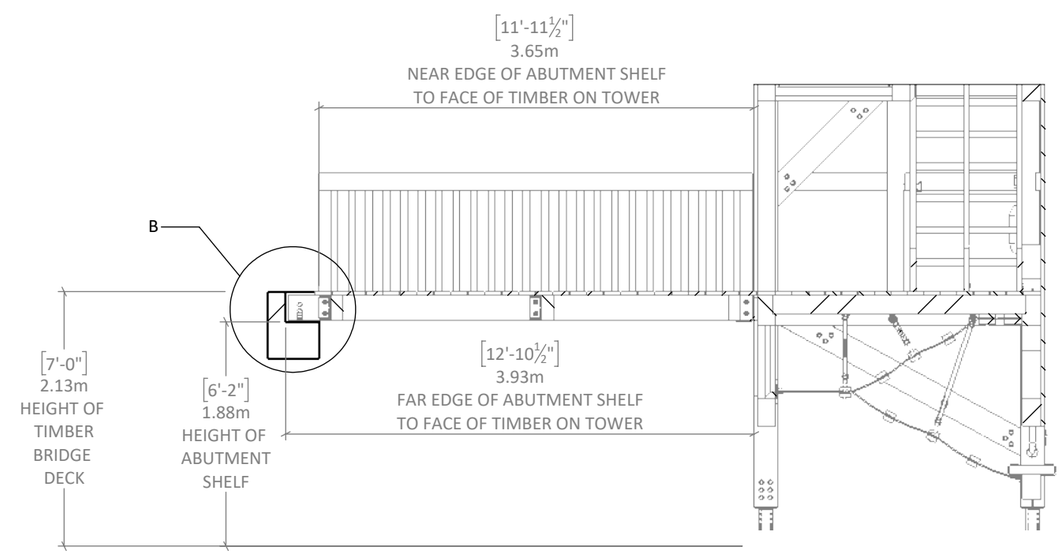

ABUTMENT LOCATION

PROPERTY OF EARTHSCAPE PLAY INC. - DO NOT COPY. DO NOT DISTRIBUTE.

PREP BRIDGE AND TOWER

MODIFIED TIMBER BRIDGE 12'

STEP 1 - CONFIRM WHERE THE ACCESSORY IS TO BE INSTALLED

Review the complete tower installation package to determine on which side this accessory is to be installed and what the finished product should look like.

STEP 2 - INSTALL BRIDGE PRIOR TO ANCHORING TOWERS TO FOUNDATION PAD

It might be necessary to make minor adjustments the position of the timber tower to suit the as-built bridge. Anchor tower after bridge has been installed. Ensure the tower opening is centered on the opening of the abutment, also the tower is parallel to the abutment face.

STEP 3 - PREP BRIDGE

Temporarily remove the end deckboards from both ends of bridge as per Figure 1. Make sure to note which end they came from and their orientation.

STEP 4 - ATTACH THE BRIDGE BRACKET TO TOWER

Attach the bridge bracket to the timber tower as shown in Section H-H.

STEP 5 - CONFIRM GAP BETWEEN TOWER AND ABUTMENT

Measure distance between the tower and the abutment concrete and compare to supplied bridge length. Pull tower away from concrete enough to be able to fit bridge between.

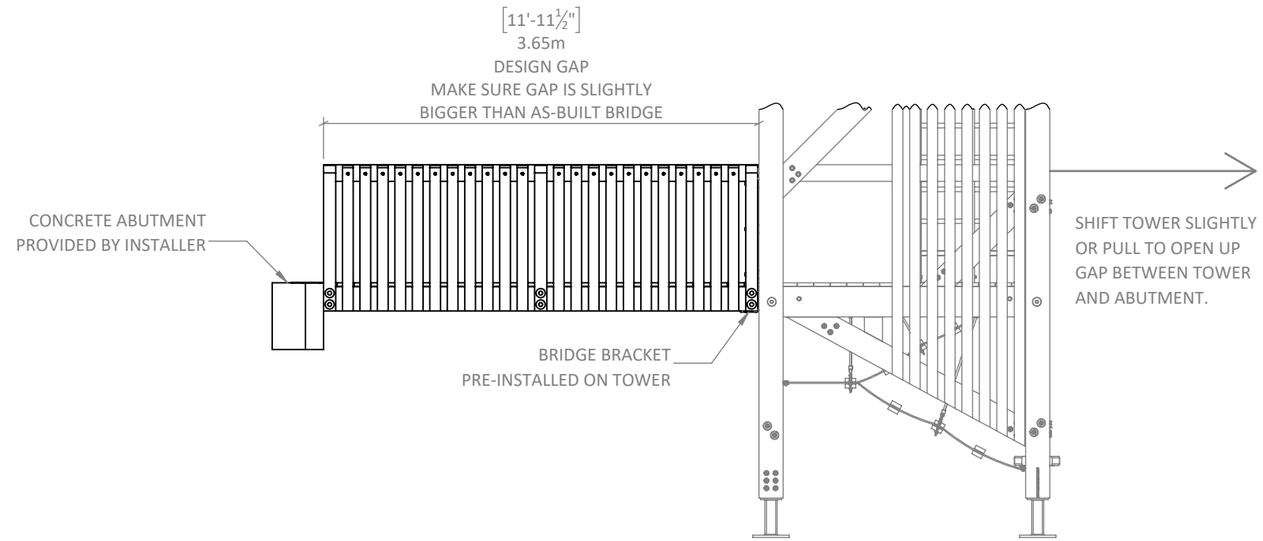

SIDE ELEVATION

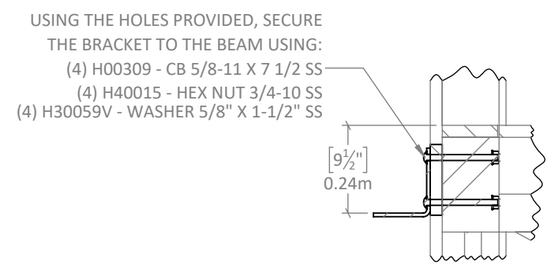

SECTION H-H

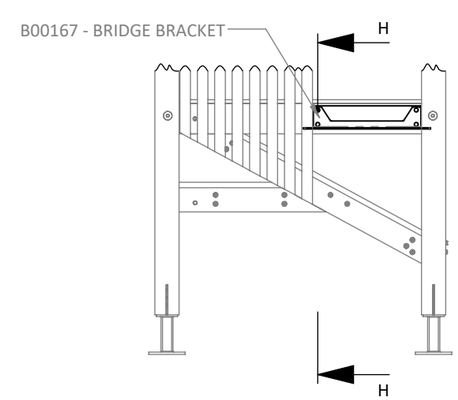

FRONT ELEVATION

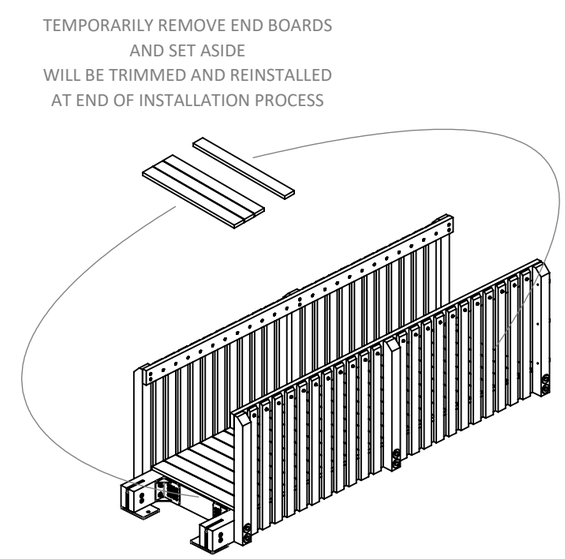

FIGURE 1

PROPERTY OF EARTHSCAPE PLAY INC. - DO NOT COPY. DO NOT DISTRIBUTE.

LIFT AND PLACE BRIDGE

MODIFIED TIMBER BRIDGE 12'

STEP 6 - LIFT AND PLACE BRIDGE

Lift bridge with appropriate equipment and move into position. Lower bridge on to the tower bracket and the concrete abutment. Ensure the bridge is centered in the tower opening and centered in the concrete abutment.

STEP 7 - ADJUST POSITION OF TOWERS

Draw the tower so the end of the bridge is tight to the tower and the bridge is sitting on the abutment. Ensure a gap is present from the end of the bridge to the concrete as shown in the plan view.

Make minor adjustments to the tower position to ensure both ends of the bridge are centered in the tower opening and the concrete abutment. Ensure the tower is tight to the end of the bridge.

STEP 8 - SECURE BRIDGE GUARDRAIL POSTS

Install screws through pre-drilled holes in the end guardrail posts into timber tower posts.

Pre-drill all screw holes as per general notes.

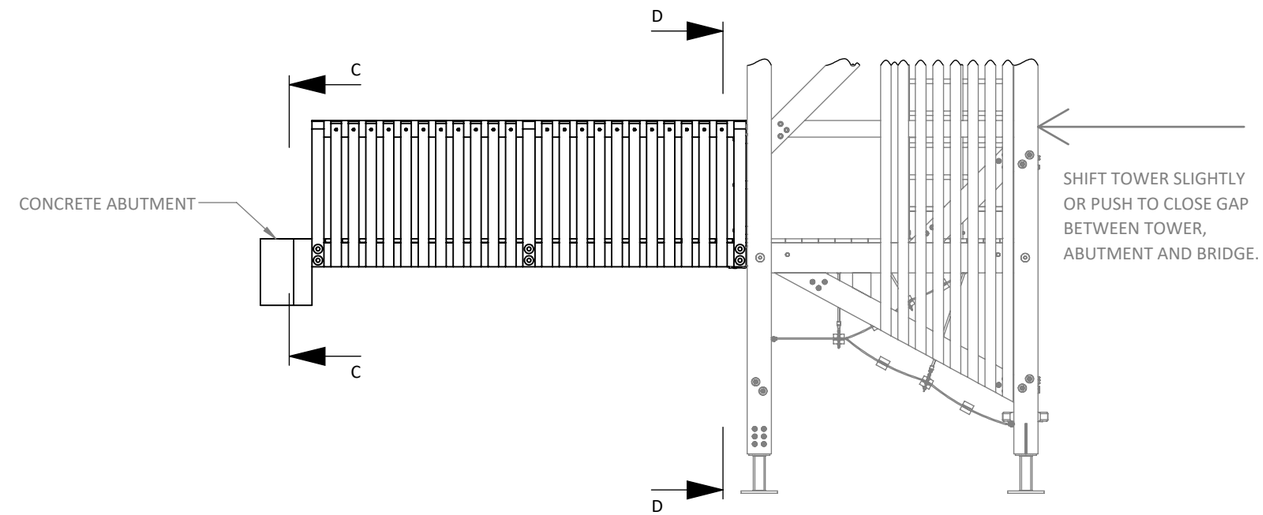

SIDE ELEVATION

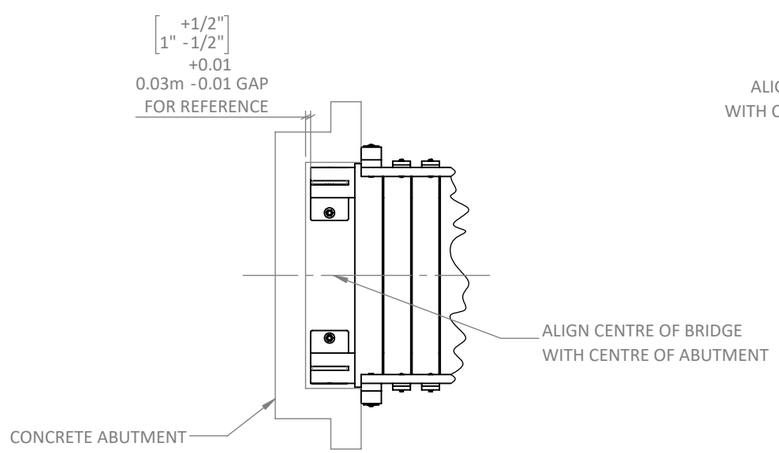

PLAN VIEW

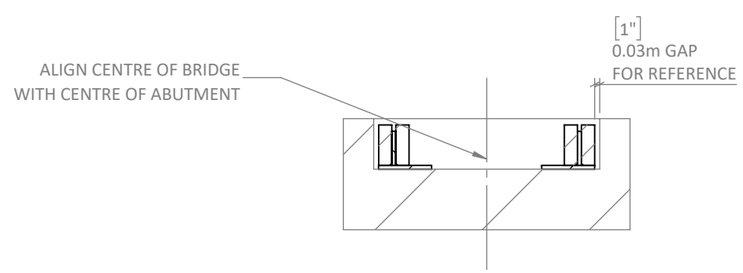

SECTION C-C
ABUTMENT SIDE

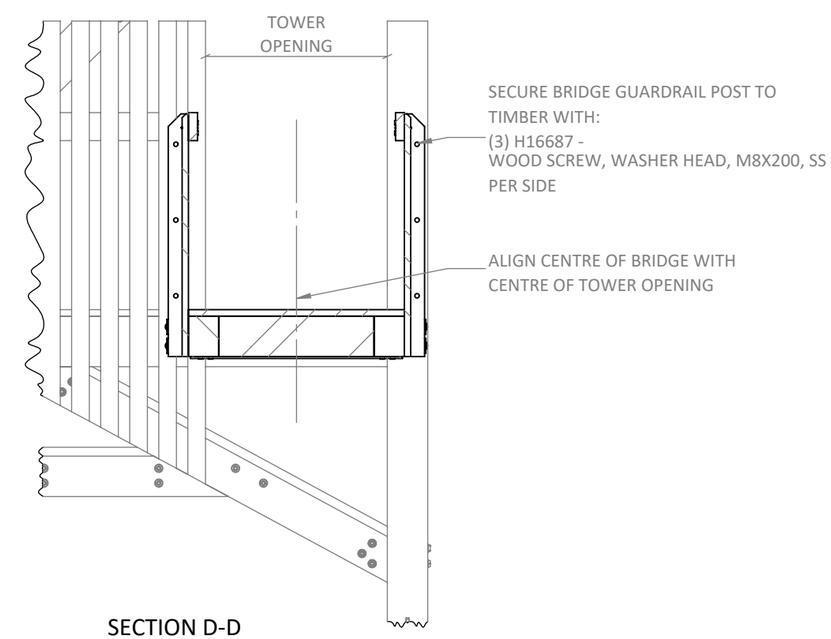

SECTION D-D
TOWER SIDE

PROPERTY OF EARTHSCAPE PLAY INC. - DO NOT COPY. DO NOT DISTRIBUTE.

STEP 9 - SECURE BRIDGE STRINGERS

Install screws through bottom of steel brackets into underside of bridge timber stringers.

Pre-drill all screw holes as per general notes in main installation package.

STEP 10 - SECURE BRIDGE TO ABUTMENT

Install threaded rod into concrete using epoxy, see general notes in the main installation package epoxy details. Cut and grind the top of the threaded rod after installation to ensure max two threads exposed.

Ensure a minimum threaded rod embedment depth of 6".

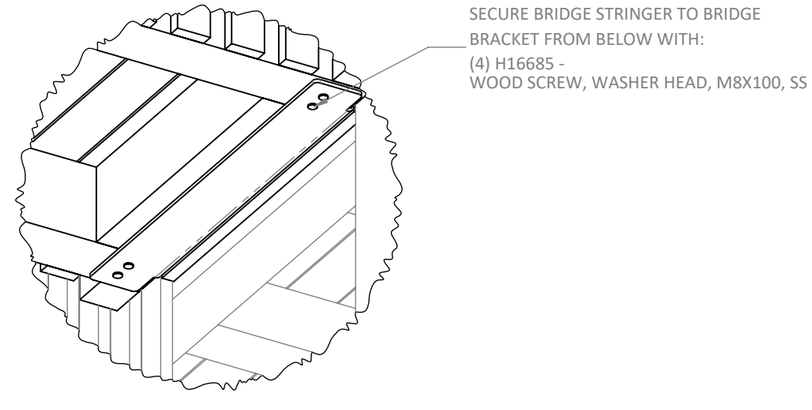

DETAIL E

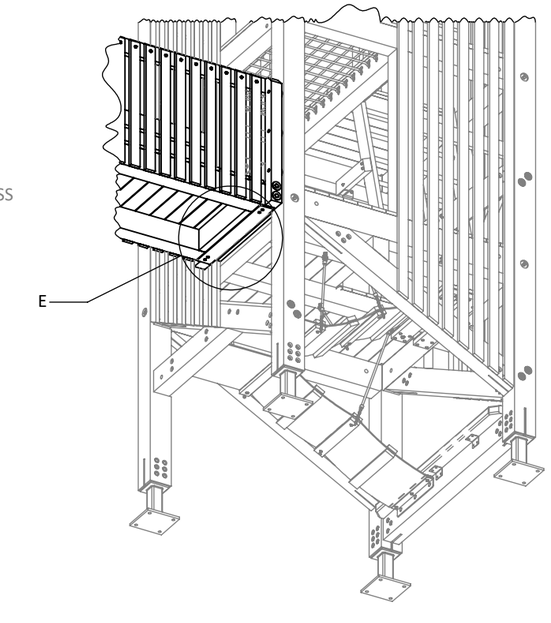

LOOKING UNDER BRIDGE

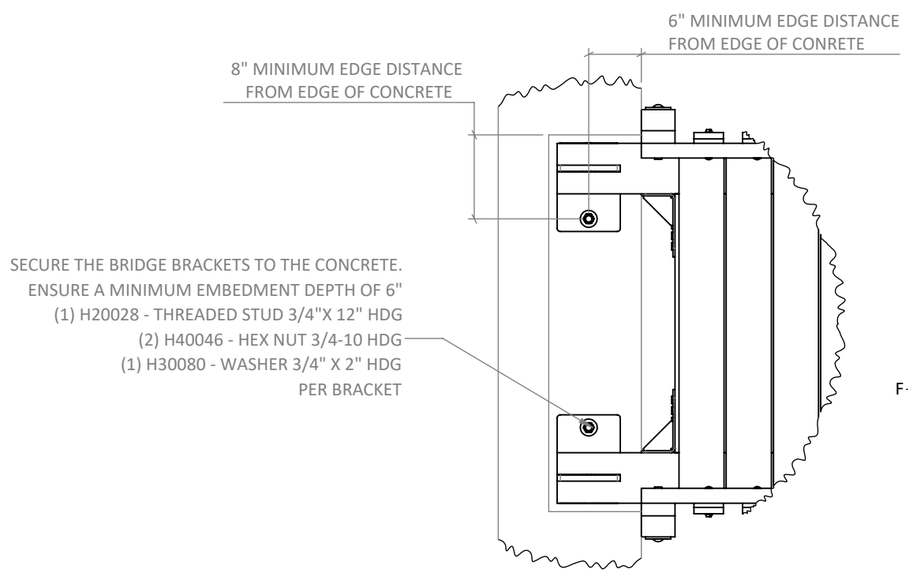

DETAIL F

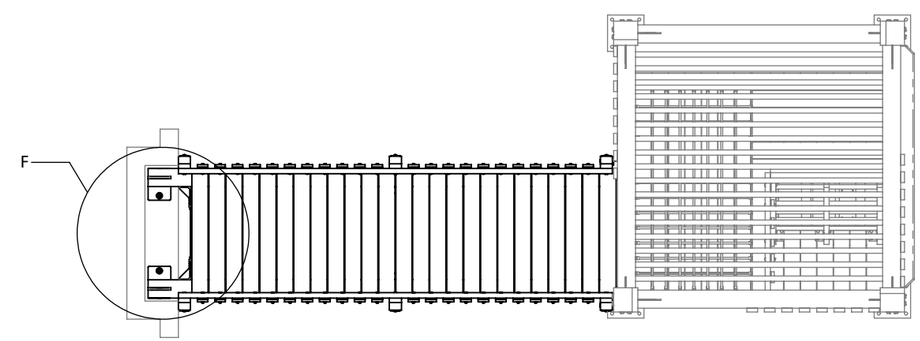

PLAN VIEW

PROPERTY OF EARTHSCAPE PLAY INC. - DO NOT COPY. DO NOT DISTRIBUTE.

REINSTALL DECKBOARDS

STEP 11 - REINSTALL DECKBOARDS AT TOWER

Trim the removed deckboards to suit the gap in decking between the bridge and tower.

Ensure a +/-6mm (1/4") gap between deckboards as per Detail K. Deckboards must not touch. Reinstall with the original screws.

STEP 12 - REINSTALL DECKBOARDS AT ABUTMENT

Trim the removed deckboards to suit the gap in decking between the bridge and the abutment. By design the deckboards are intended to be flush with the finished grade at the abutment.

Ensure a +/-6mm (1/4") gap between deckboards as per Detail J and L. Deckboards must not touch. Reinstall with the original screws.

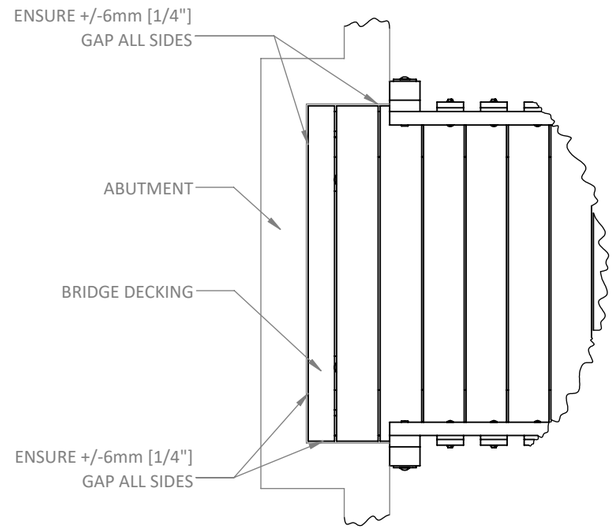

DETAIL L

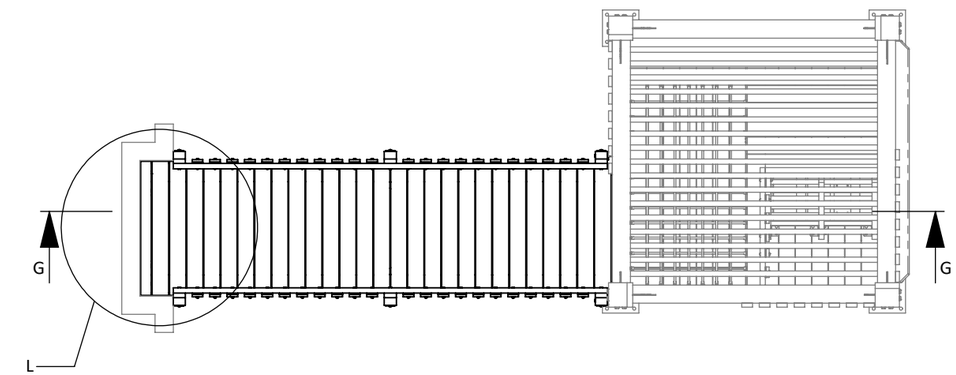

PLAN VIEW

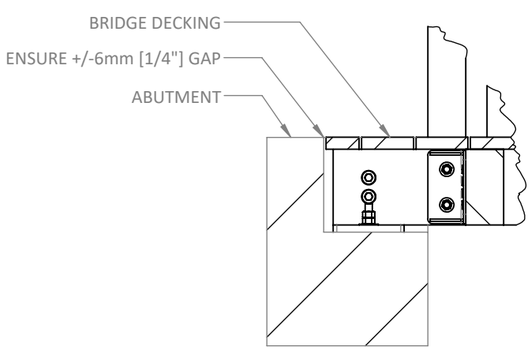

DETAIL J
DECKBOARDS AT ABUTMENT

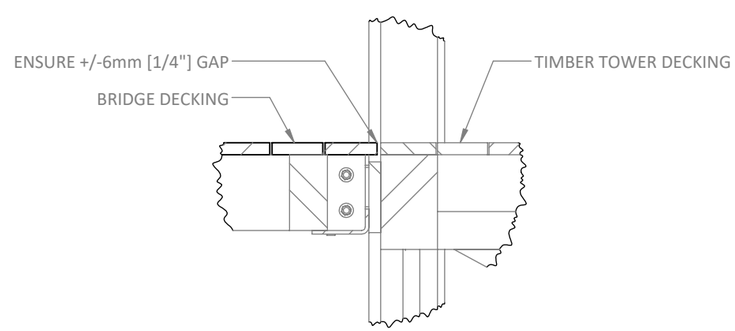

DETAIL K
DECKBOARDS AT TOWER

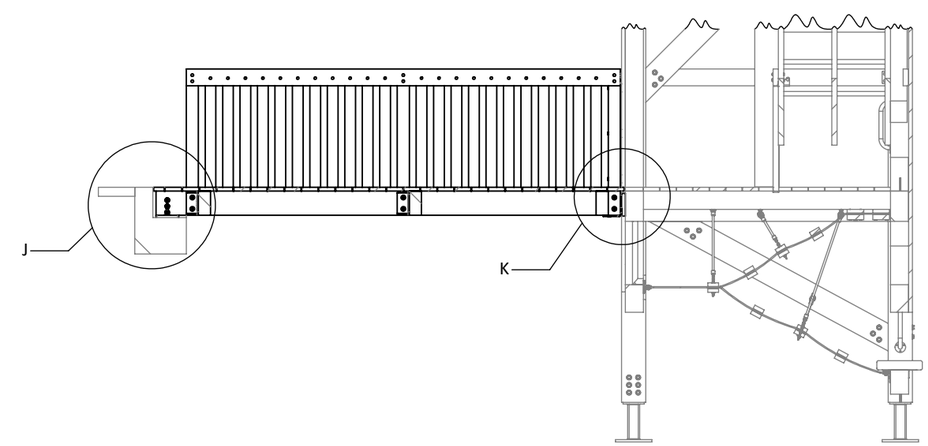

SECTION G-G

DATE DOCUMENT RELEASED 2025-09-18
DOCUMENT NUMBER: 1209450 - R1

PROPERTY OF EARTHSCAPE PLAY INC. - DO NOT COPY. DO NOT DISTRIBUTE.

INSTALLATION INSTRUCTIONS

EARTHSCAPE COLLECTIONS

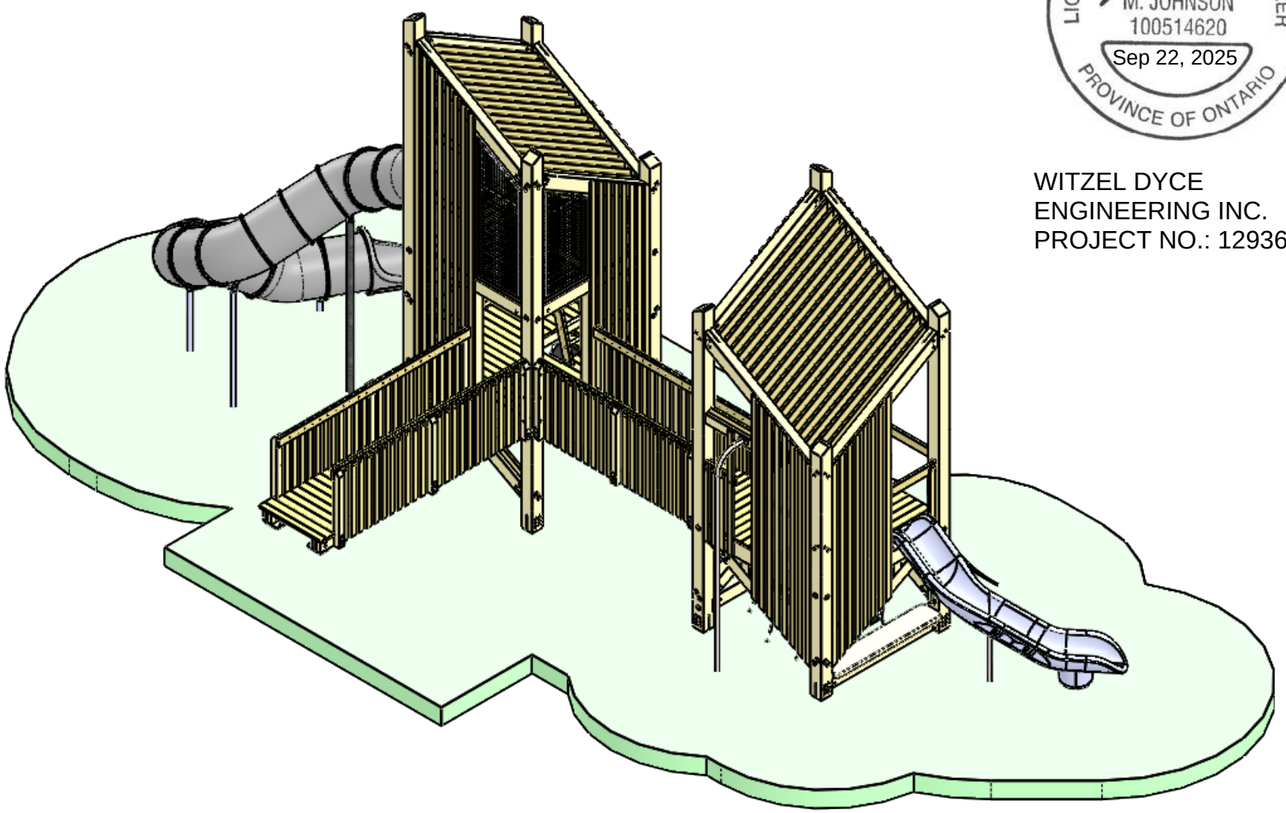

LICENSED PROFESSIONAL ENGINEER
M. JOHNSON
100514620
Sep 22, 2025
PROVINCE OF ONTARIO

WITZEL DYCE
ENGINEERING INC.
PROJECT NO.: 12936-165

COMBINED ASSEMBLY

THESE INSTRUCTIONS APPLY TO THE UNIQUE TOWER CONFIGURATION FOR:

PROJECT NUMBER: ESC0499
DESIGNED FOR: HURLD PARK
TO BE INSTALLED IN: WOBURN, MA

NOTE: COLOURS SHOWN ARE REPRESENTATIONAL AND MAY NOT BE THE SAME AS THOSE OF THE SUPPLIED PRODUCT

DATE DOCUMENT RELEASED 2025-09-18
DOCUMENT NUMBER: 1209315-R1

PROPERTY OF EARTHSCAPE PLAY INC. - DO NOT COPY. DO NOT DISTRIBUTE.

SPECIFICATIONS

INTENDED USER AGE GROUP: 5-12 y
MAXIMUM HEIGHT OF STRUCTURE: 24'0" ABOVE FINISHED PLAY SURFACE
MAXIMUM DESIGNATED FALL HEIGHT: 6'-8"
AREA OF SURFACING: 1420 ft²
APPROXIMATE AS SHIPPED WEIGHT:

- 1 LEVEL TIMBER TOWER - 4,350 LBS
- 2 LEVEL TIMBER TOWER - 5,500 LBS
- 10' WOODEN BRIDGE - 670 LBS
- 12' MODIFIED WOODEN BRIDGE - 870 LBS

RECOMMENDED INSTALLATION BUFFER

Play equipment requires a variety of offsets to other elements in a playground. The plan view on this page shows the minimum recommended area needed for installing this piece of play equipment by itself. Combining this play equipment with other pieces should be reviewed by a person with a Certified Playground Safety Inspector training.

The offset shown here includes a buffer beyond the ASTM requirements to account for fabrication and material variation.

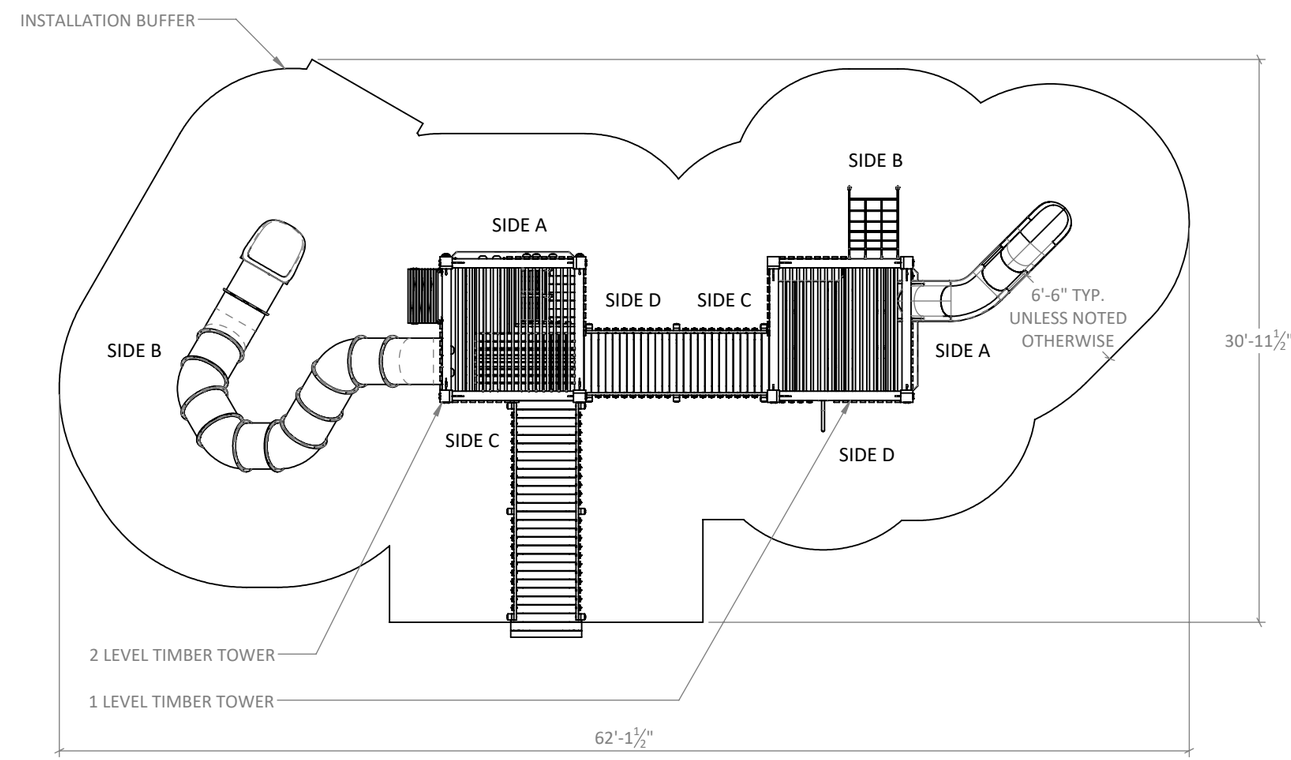

PROPERTY OF EARTHSCAPE PLAY INC. - DO NOT COPY. DO NOT DISTRIBUTE.

PLEASE READ ALL INSTRUCTIONS

Before starting to install this equipment be sure to read through and understand these instructions.

If you have any questions, contact your Earthscape Representative for assistance before proceeding.

Time, tools and materials noted on this sheet only cover the installation of the base timber tower. They do not include any of the add-ons. See separate installation packages to understand what additional time will be required.

MEASUREMENTS AND STANDARDS

Measurements have been provided in both metres and [feet-inches]. Ensure to follow standards noted for the location in which this play equipment is being installed. Those marked CSA are to be used in Canada and those marked ASTM to be used in the United States.

LIST OF ABBREVIATIONS

AYC = Alaskan Yellow Cedar
WRC = Western Red Cedar
DPS = Designated Play Surface
SS = Stainless Steel
HDG = Hot Dipped Galvanized
WWM = Welded Wire Mesh
TYP = Typical
C/W = Complete With
UNO = Unless Noted Otherwise
EWF = Engineered Wood Fiber
PIP = Poured-In-Place Rubber Surfacing
PT = Pressure Treated

TOOLS SUPPLIED WITH THIS PRODUCT

- None

TOOLS THE INSTALLER NEEDS TO SUPPLY

- T25 drive bit
- T40 drive bit
- High Torque Drill
- Wood drill bit set up to and including 1/2"
- 1/2" impact driver
- Socket Set up to and including 1-1/8"
- Hammer drill
- Concrete drill bit set up to and including size required by epoxy manufacturer to set 3/4" threaded rod 8" deep in concrete pad
- Angle grinder (with course 24 grit sanding disks and metal cut off disks)
- Transit or Laser Level
- Rigging and lifting straps

EQUIPMENT THE INSTALLER NEEDS TO SUPPLY

Machine to lift and position heaviest element.

- Pre-assembled 2 Level Tower 5,500 LBS lbs

INSTALLER CREW AND TIME REQUIRED

Number of people needed: 3
Typical total person-hours to install: 80 + concrete cure time

Time breakdown:

- 8 hours x 3 people for excavation and pouring concrete
- Time for concrete cure
- 16 hours x 3 people for onsite fabrication and play equipment installation
- 4 hours x 2 people for onsite Enclosed Bridge installation

MATERIALS THE INSTALLER NEEDS TO SUPPLY

- Threadmate threadlocker Vibra-Tite VC-3 (or equal)
- Epoxy - Simpson Strong Tie "Set 3G" or Hilti "Hy-200"
- Concrete - as specified in details

WARNINGS

These instructions do not provide specific guidance on the use of tools or the lifting and moving heavy objects. It is assumed that competent people are installing this product who are familiar with using the tools and equipment required and are knowledgeable and skilled at lifting and positioning heavy objects.

PROPERTY OF EARTHSCAPE PLAY INC. - DO NOT COPY. DO NOT DISTRIBUTE.

MAKE SURE YOU HAVE ALL THE PARTS

Examine the equipment and ensure you have all the required parts listed in the table below.

See "As Shipped Page" to understand orientation of product as delivered to site.

PART IMAGE	ITEM NO.	PART NO.	DESCRIPTION	QTY.
SEE IMAGE NEXT SHEET	1	1209039*	MODIFIED WOODEN BRIDGE 12'	1
SEE IMAGE THIS SHEET	2	F00185	1 LEVEL TIMBER TOWER	
NO IMAGE PROVIDED	3	F00227	CLIMBING HOLDS (PRE-INSTALLED)	1
SEE IMAGE NEXT SHEET	4	F00228*	CLADDED LADDER	1
SEE IMAGE THIS SHEET	5	F00302*	FILE POLE - SURFACE MOUNT 6' PLATFORM	1
SEE IMAGE THIS SHEET	6	F00308*	PLASTIC OPEN SLIDE - IN GROUND 6' - VEER LEFT	1
SEE IMAGE NEXT SHEET	7	F00316*	PLASTIC TUBE SLIDE - FLANGE 12' - TURN RIGHT	1
SEE IMAGE NEXT SHEET	8	F00363*	WOODEN BRIDGE 10'	1
SEE IMAGE NEXT SHEET	9	F00403*	SLING SEATS - PIP	1
SEE IMAGE THIS SHEET	10	F00405*	ACCESS CLIMBING NET - PIP	1
SEE IMAGE NEXT SHEET	11	F00407	2 LEVEL TIMBER TOWER	1
	12	H20019	THREADED STUD 3/4"-10 X 12" SS	32
	13	H30047V	WASHER 3/4" X 1-3/4" SS	32
	14	H40015	HEX NUT 3/4-10 SS	64

IMAGES OF FASTENERS IN THIS TABLE ARE REPRESENTATIONAL TO HELP IDENTIFY PARTS.

*THESE ASSEMBLIES INCLUDE ADDITIONAL HARDWARE. REVIEW THE SEPARATE INSTALLATION PACKAGES THAT CORRESPOND TO EACH ADD-ON FOR MORE INFORMATION.

F00405
ACCESS CLIMBING NET - PIP
SHIPS IN PIECES
SEE SEPARATE INSTALLATION PACKAGE FOR ADDITIONAL DETAILS

F00302
FIRE POLE - SURFACE MOUNT 6' PLATFORM
SHIPS IN PIECES
SEE SEPARATE INSTALLATION PACKAGE FOR ADDITIONAL DETAILS

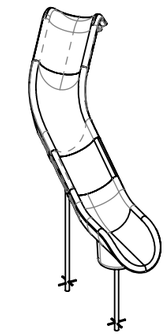

F00308
PLASTIC OPEN SLIDE - IN GROUND 6' - VEER LEFT
SHIPS IN PIECES
SEE SEPARATE INSTALLATION PACKAGE FOR ADDITIONAL DETAILS

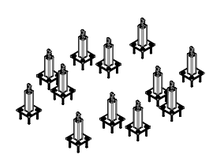

F00403
SLING SEATS - PIP
SHIPS IN PIECES
SEE SEPARATE INSTALLATION PACKAGE FOR ADDITIONAL DETAILS

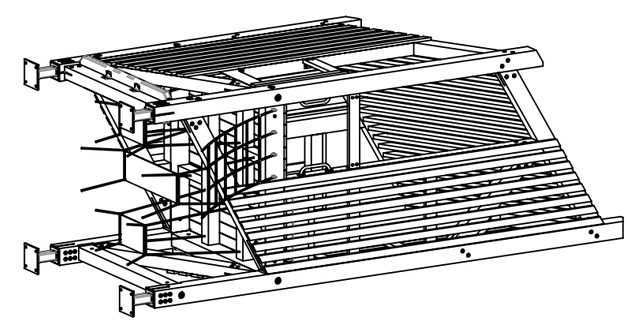

F00185
1 LEVEL TIMBER TOWER
SHIPS COMPLETE AS ILLUSTRATED
INSTALL DETAILS THIS PACKAGE

PROPERTY OF EARTHSCAPE PLAY INC. - DO NOT COPY. DO NOT DISTRIBUTE.

SUPPLIED PARTS (2 OF 2)

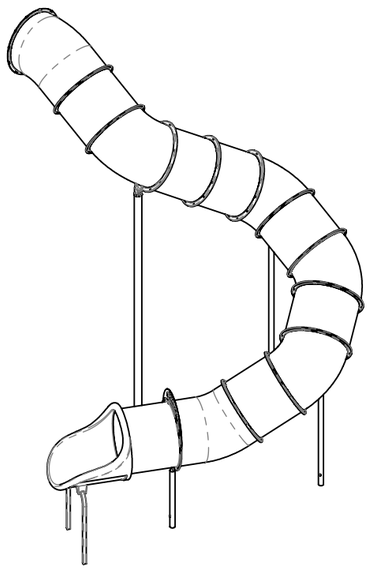

F00316
PLASTIC TUBE SLIDE - FLANGE
12' - TURN RIGHT
SHIPS IN PIECES
SEE SEPARATE INSTALLATION PACKAGE FOR
ADDITIONAL DETAILS

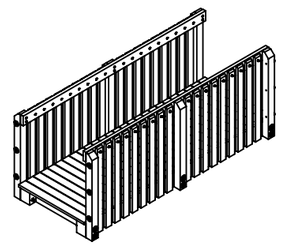

F00363
WOODEN BRIDGE 10'
SHIPS COMPLETE AS ILLUSTRATED
SEE SEPARATE INSTALLATION PACKAGE
FOR ADDITIONAL DETAILS

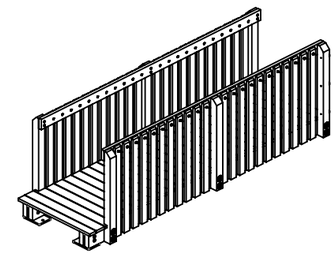

1209039
MODIFIED WOODEN BRIDGE 12'
SHIPS COMPLETE AS ILLUSTRATED
SEE SEPARATE INSTALLATION PACKAGE
FOR ADDITIONAL DETAILS

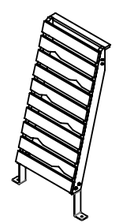

F00228
CLADDED LADDER
SHIPS COMPLETE AS ILLUSTRATED
SEE SEPARATE INSTALLATION PACKAGE FOR
ADDITIONAL DETAILS

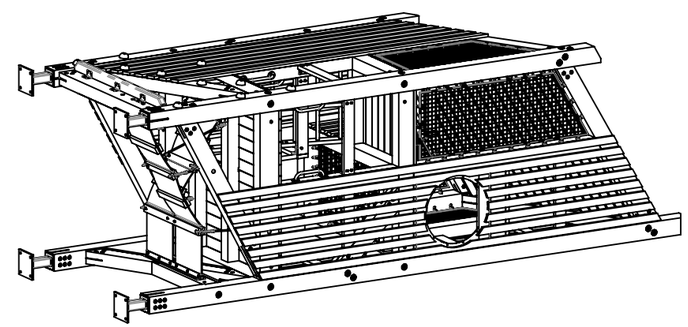

F00407
2 LEVEL TIMBER TOWER
SHIPS COMPLETE AS ILLUSTRATED
INSTALL DETAILS THIS PACKAGE

PROPERTY OF EARTHSCAPE PLAY INC. - DO NOT COPY. DO NOT DISTRIBUTE.

TOWER AS SHIPPED - 1 LEVEL TIMBER TOWER

COMBINED ASSEMBLY

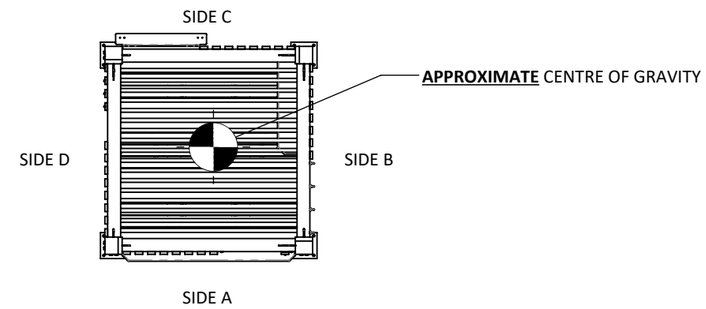

PLAN VIEW

PRE-ASSEMBLED TOWER AS SHIPPED
WEIGHS APPROXIMATELY:
4,350 LBS

DIMENSION TO
LIMITS OF POST
BASE BRACKETS

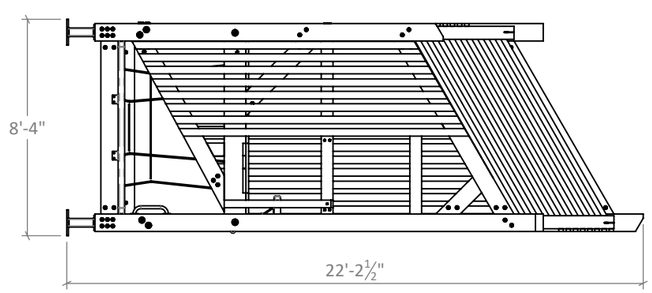

ORIENTATION ON TRUCK

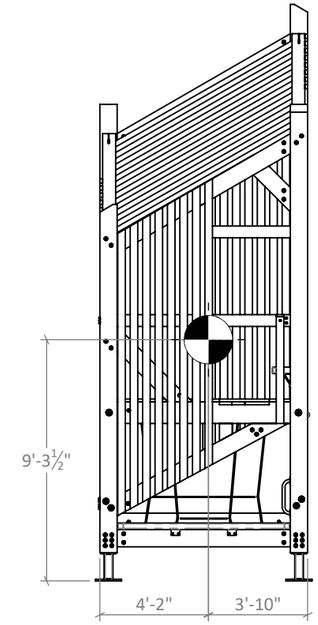

SIDE A ELEVATION

DIMENSIONS FROM OUTSIDE
FACE OF CORNER POSTS

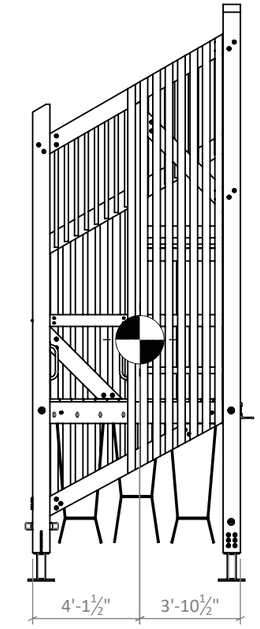

SIDE B ELEVATION

CENTRE OF GRAVITY

PROPERTY OF EARTHSCAPE PLAY INC. - DO NOT COPY. DO NOT DISTRIBUTE.

TOWER AS SHIPPED - 2 LEVEL TIMBER TOWER

COMBINED ASSEMBLY

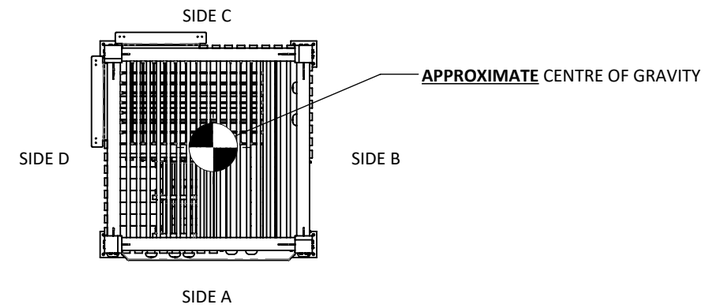

PLAN VIEW

PRE-ASSEMBLED TOWER AS SHIPPED
WEIGHS APPROXIMATELY:
5,500 LBS

DIMENSION TO
LIMITS OF POST
BASE BRACKETS

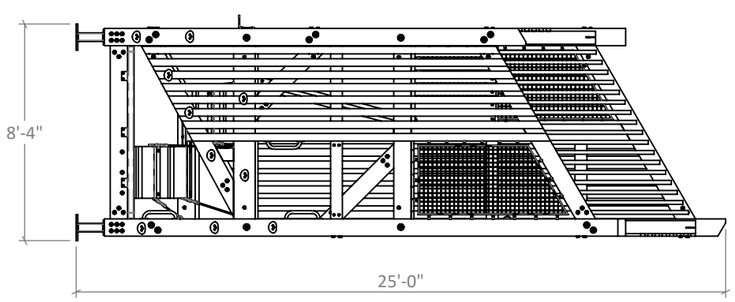

ORIENTATION ON TRUCK

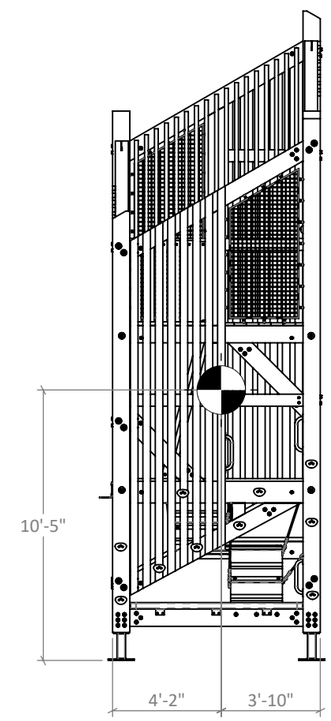

SIDE A ELEVATION

DIMENSIONS FROM OUTSIDE
FACE OF CORNER POSTS

CENTRE OF GRAVITY

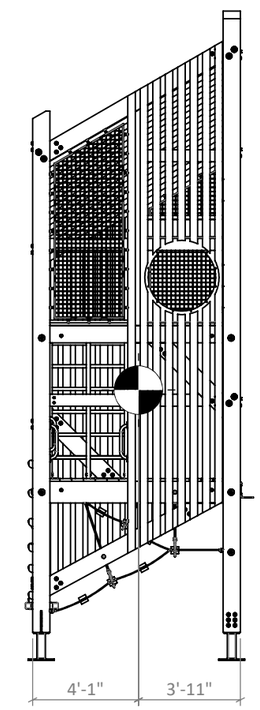

SIDE B ELEVATION

PROPERTY OF EARTHSCAPE PLAY INC. - DO NOT COPY. DO NOT DISTRIBUTE.

FINISHED PRODUCT - FRONT ISOMETRIC

WHAT THE FINISHED PRODUCT LOOKS LIKE

All concrete pads and play surfacing to be supplied by the installer.

Finished play surface is assumed to be level. Installation sites with sloped surfacing may not work with the supplied equipment. If the play surface is sloped contact your Earthscape Representative for assistance before proceeding.

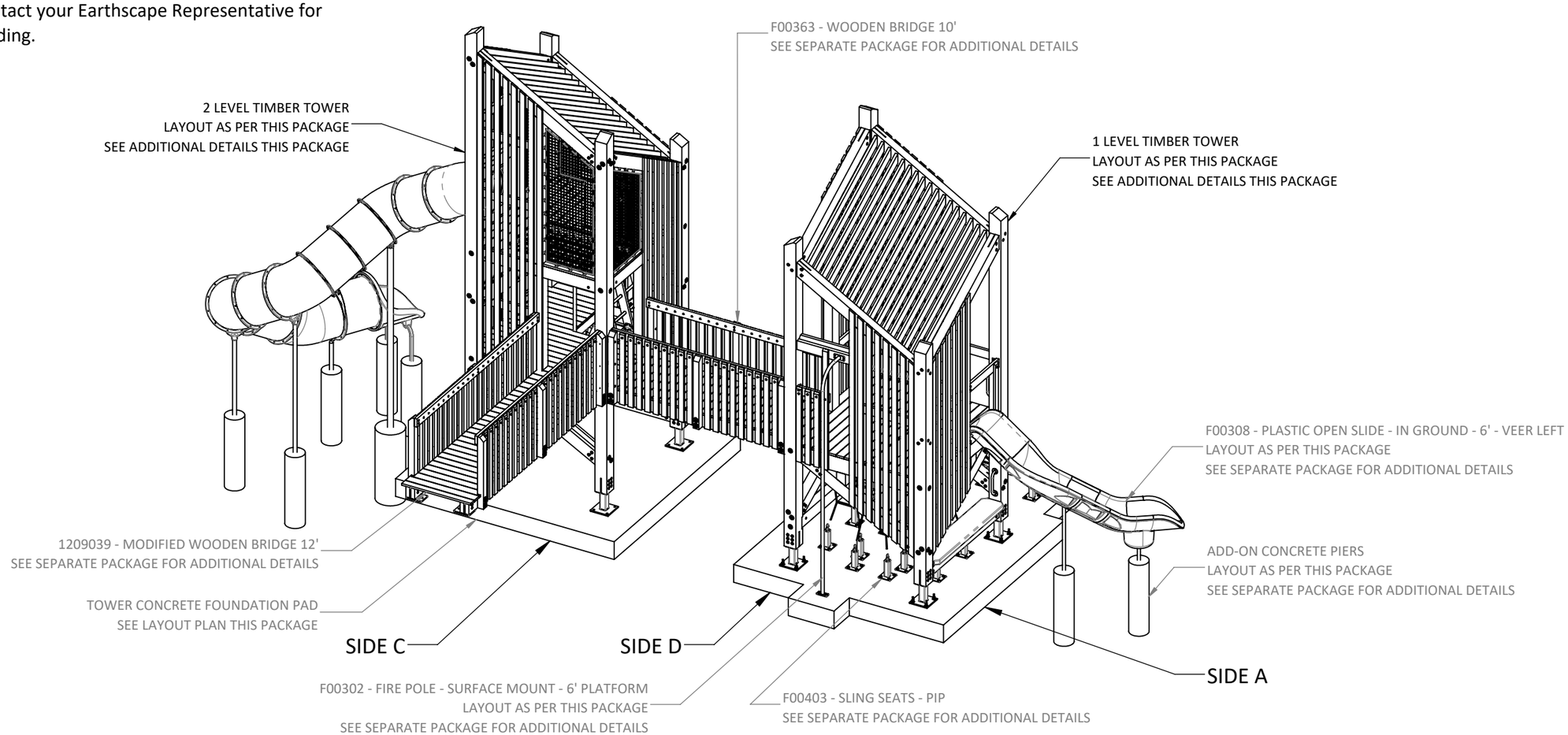

FRONT ISOMETRIC VIEW

PROPERTY OF EARTHSCAPE PLAY INC. - DO NOT COPY. DO NOT DISTRIBUTE.

FINISHED PRODUCT - REAR ISOMETRIC

WHAT THE FINISHED PRODUCT LOOKS LIKE

See note on the Finished Product - Front Isometric Sheet

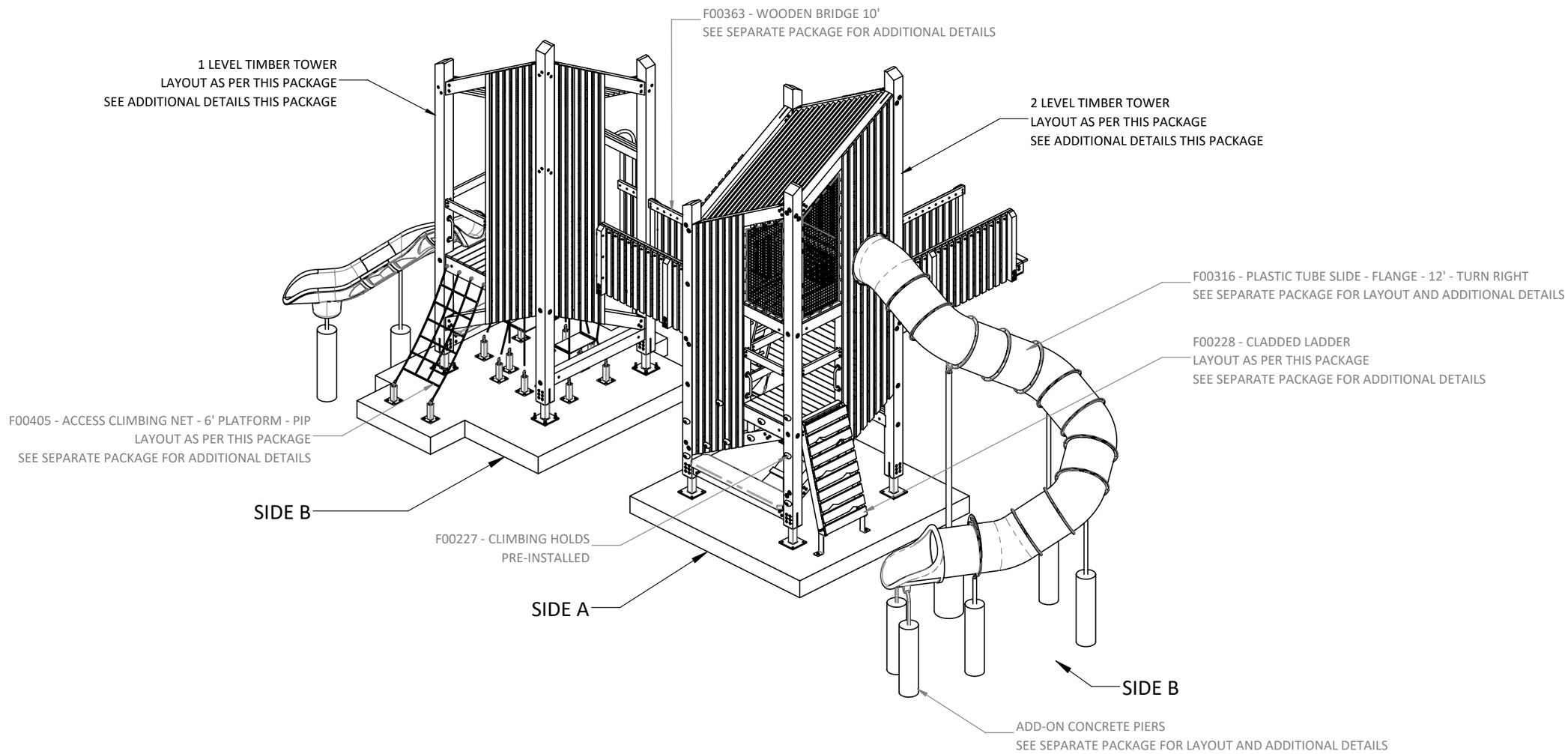

PROPERTY OF EARTHSCAPE PLAY INC. - DO NOT COPY. DO NOT DISTRIBUTE.

FINISHED PRODUCT - 1 LEVEL TIMBER TOWER

WHAT THE FINISHED PRODUCT LOOKS LIKE

See note on the Finished Product - Front Isometric Sheet

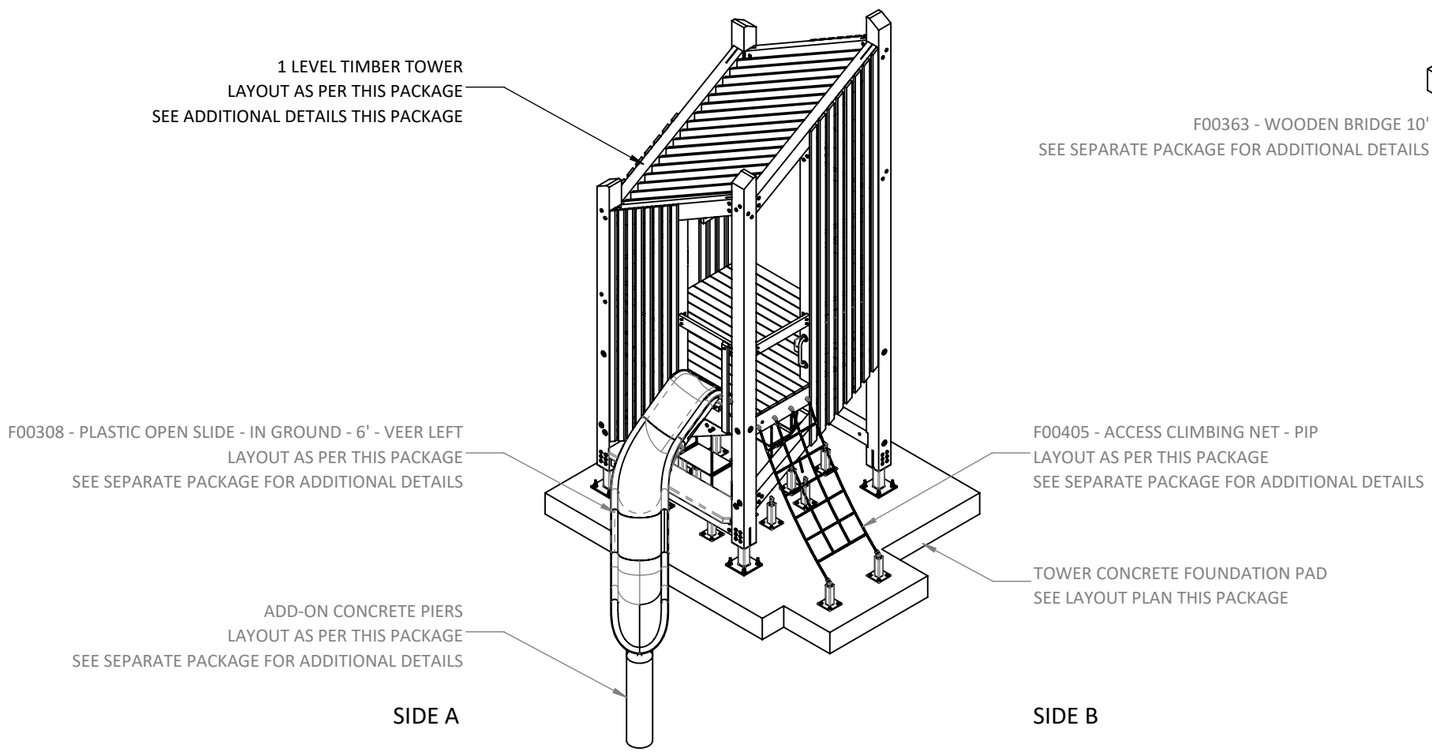

FRONT ISOMETRIC VIEW

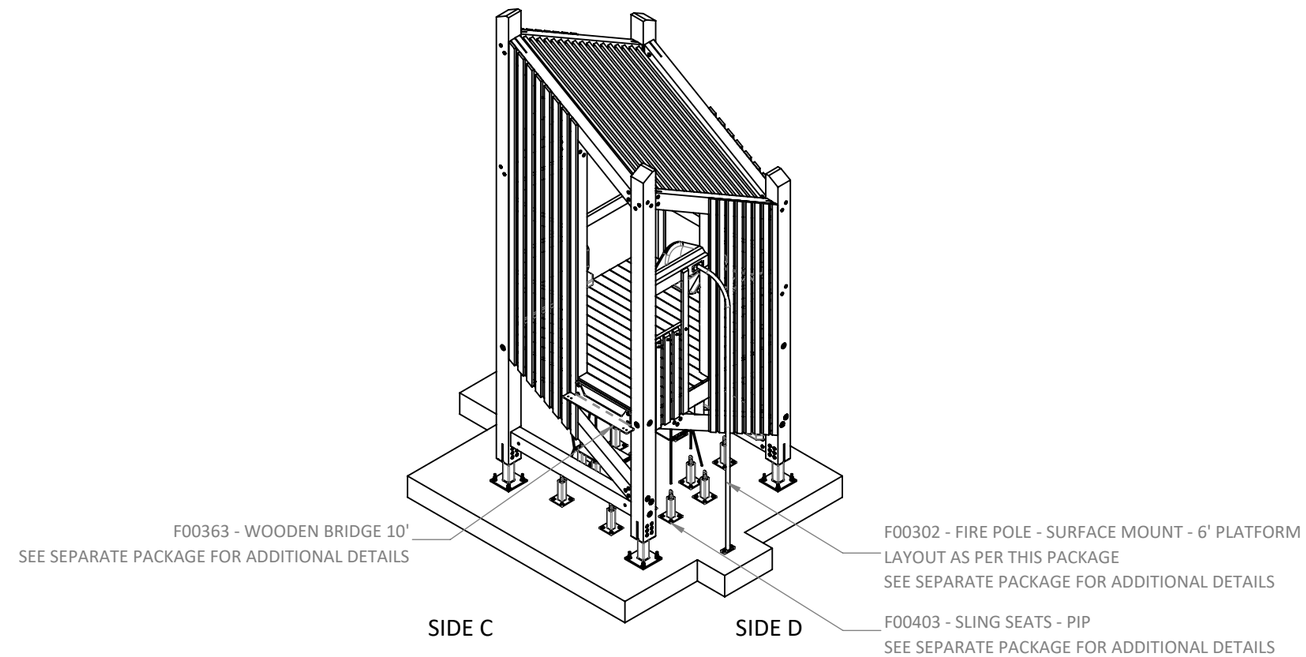

FRONT ISOMETRIC VIEW

PROPERTY OF EARTHSCAPE PLAY INC. - DO NOT COPY. DO NOT DISTRIBUTE.

FINISHED PRODUCT - 2 LEVEL TIMBER TOWER

WHAT THE FINISHED PRODUCT LOOKS LIKE

See note on the Finished Product - Front Isometric Sheet

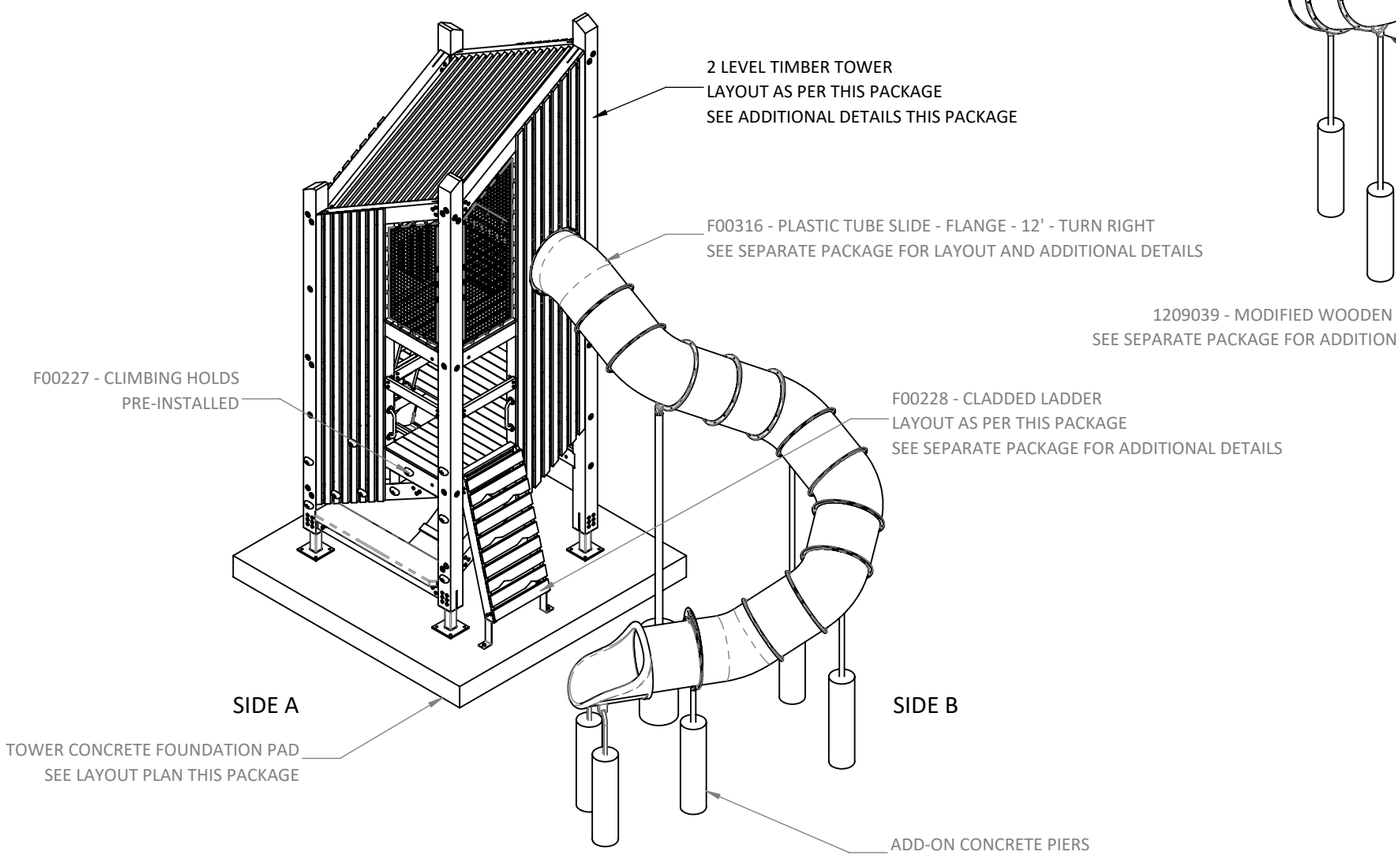

FRONT ISOMETRIC VIEW

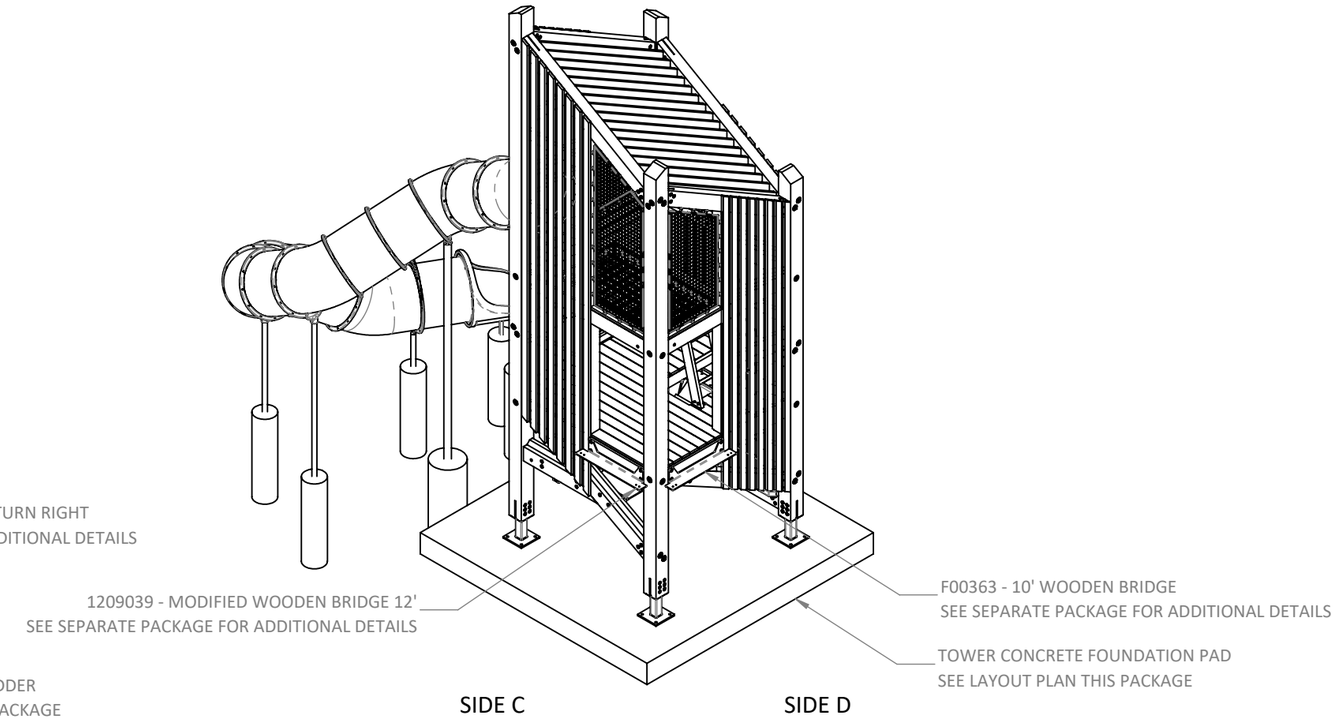

FRONT ISOMETRIC VIEW

PROPERTY OF EARTHSCAPE PLAY INC. - DO NOT COPY. DO NOT DISTRIBUTE.

FINISHED PRODUCT - PLAN VIEW

REAR

WHAT THE FINISHED PRODUCT LOOKS LIKE

See note on the Finished Product - Front Isometric sheet

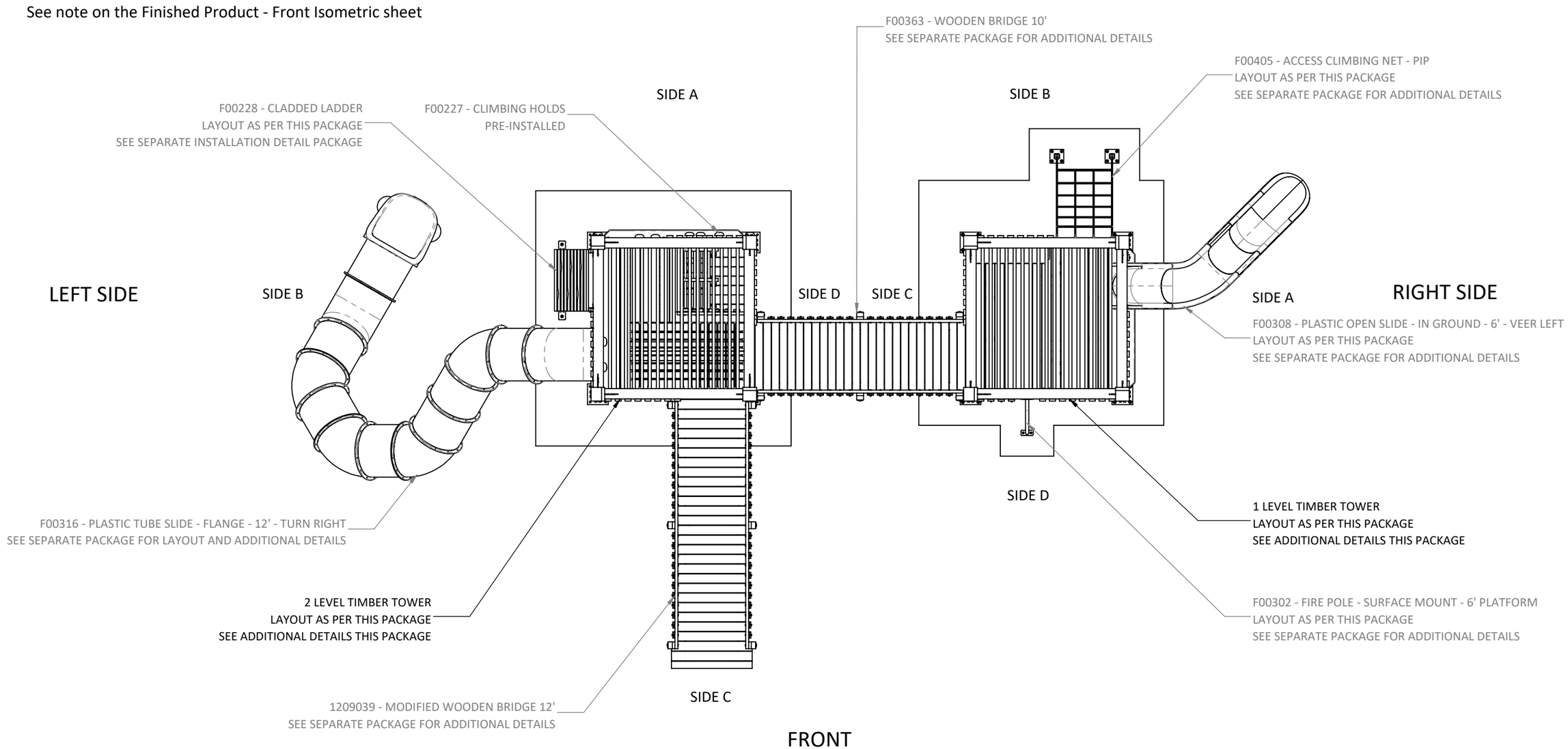

FRONT

PROPERTY OF EARTHSCAPE PLAY INC. - DO NOT COPY. DO NOT DISTRIBUTE.

WHAT THE FINISHED PRODUCT LOOKS LIKE

See note on the Finished Product - Front Isometric sheet

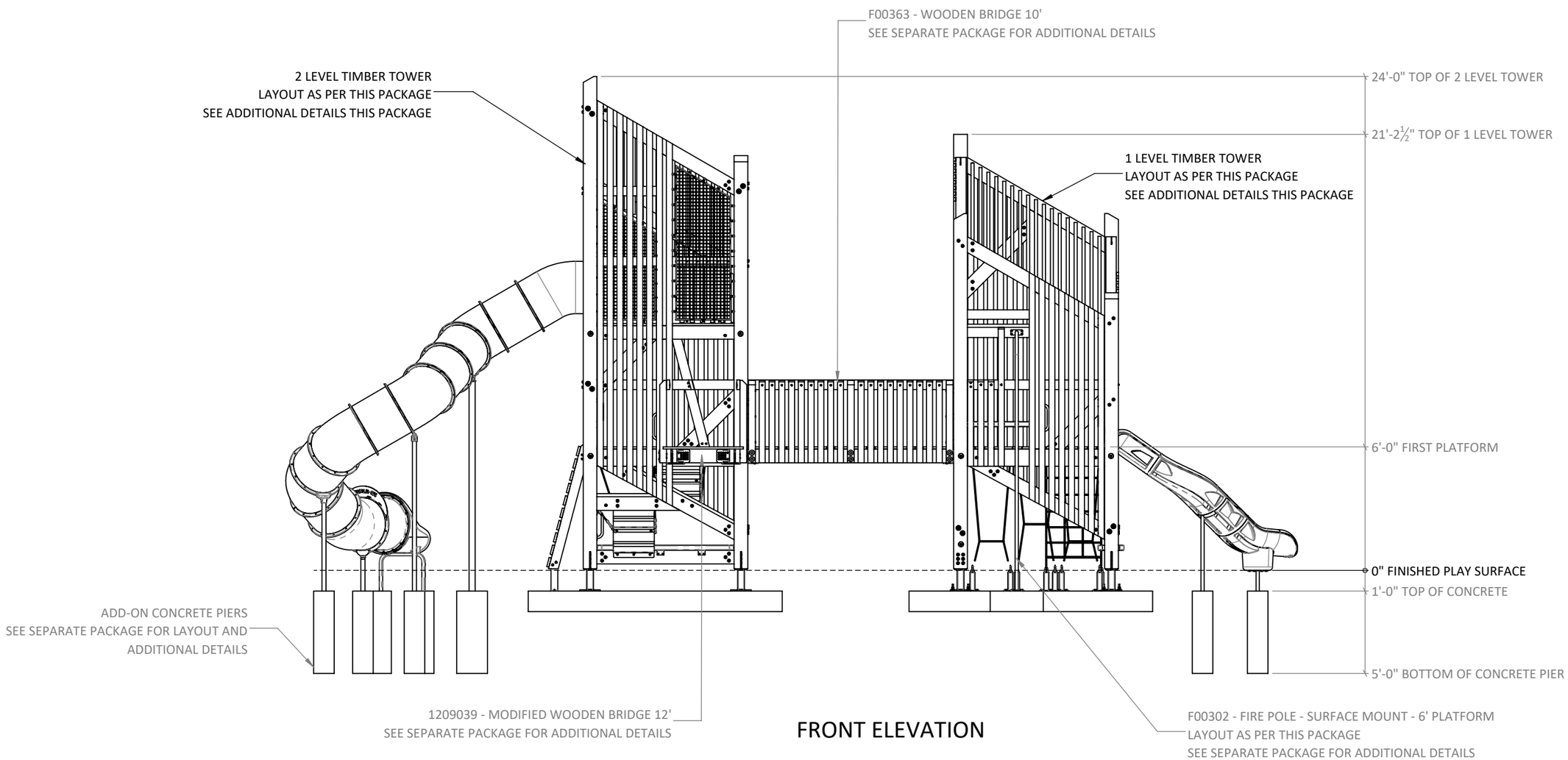

FRONT ELEVATION

PROPERTY OF EARTHSCAPE PLAY INC. - DO NOT COPY. DO NOT DISTRIBUTE.

FINISHED PRODUCT - ELEVATIONS 2 OF 4

WHAT THE FINISHED PRODUCT LOOKS LIKE

See note on the Finished Product - Front Isometric sheet

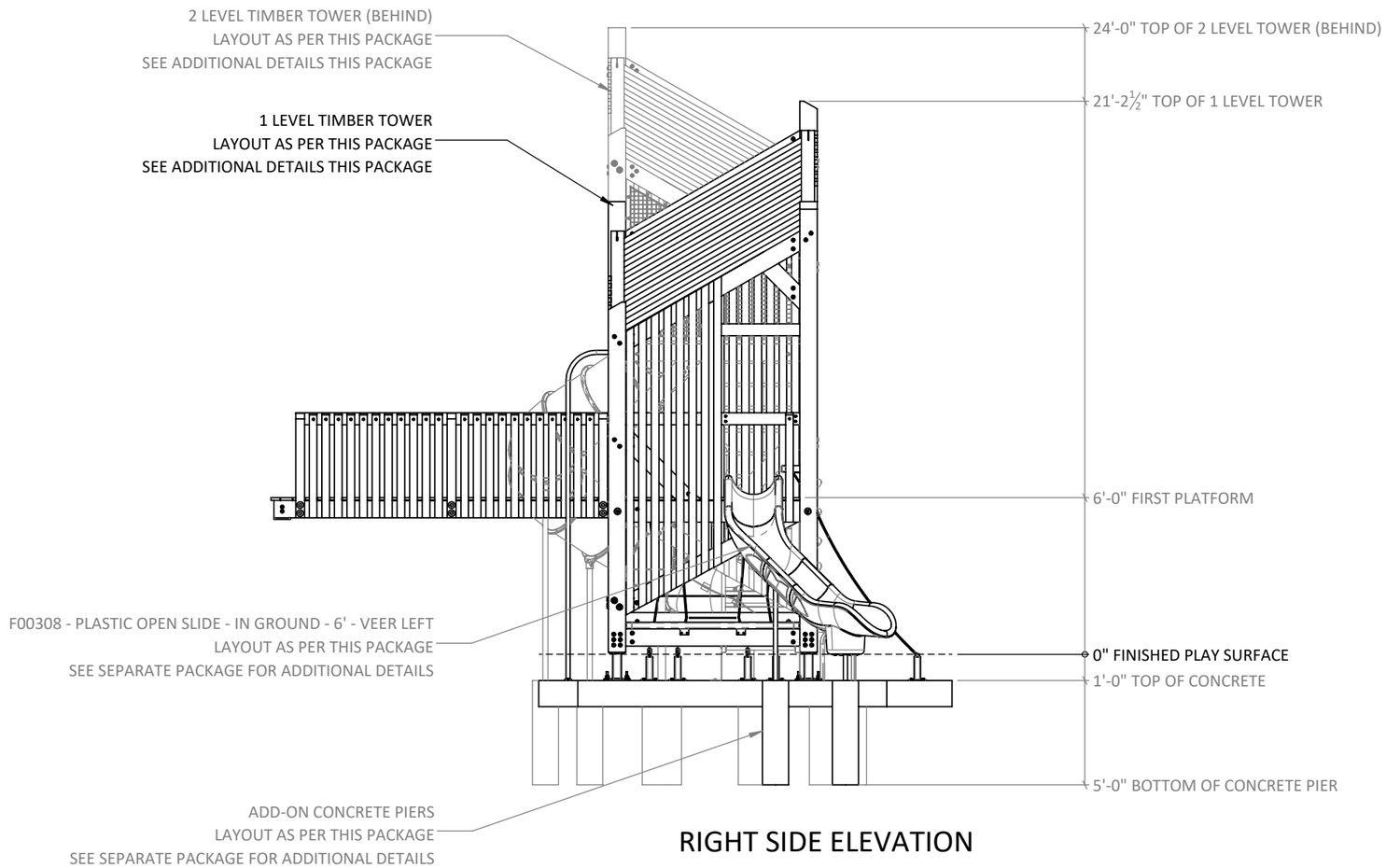

RIGHT SIDE ELEVATION

PROPERTY OF EARTHSCAPE PLAY INC. - DO NOT COPY. DO NOT DISTRIBUTE.

WHAT THE FINISHED PRODUCT LOOKS LIKE

See note on the Finished Product - Front Isometric sheet

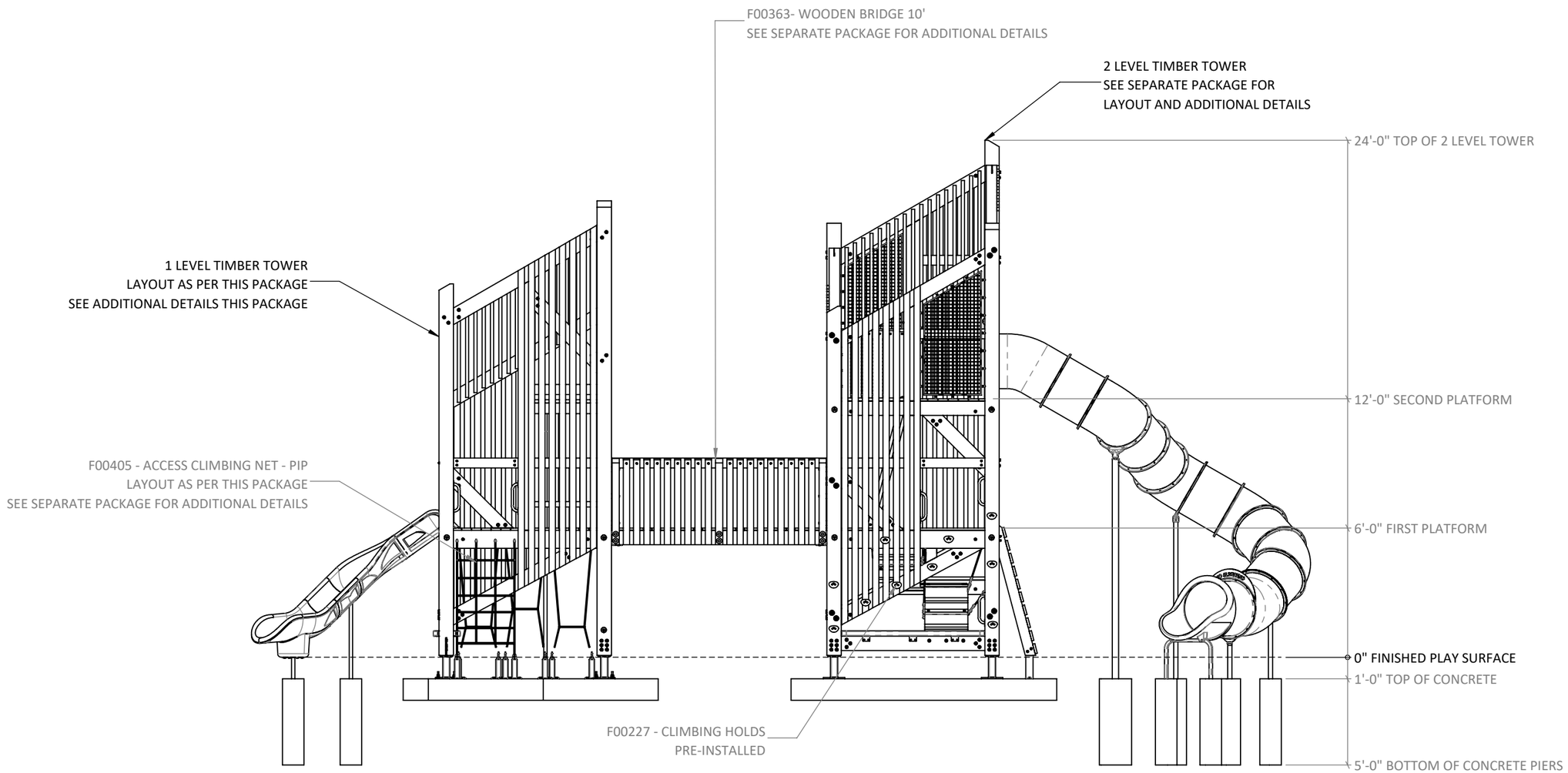

REAR ELEVATION

PROPERTY OF EARTHSCAPE PLAY INC. - DO NOT COPY. DO NOT DISTRIBUTE.

FINISHED PRODUCT - ELEVATIONS 4 OF 4

WHAT THE FINISHED PRODUCT LOOKS LIKE

See note on the Finished Product - Isometrics sheet

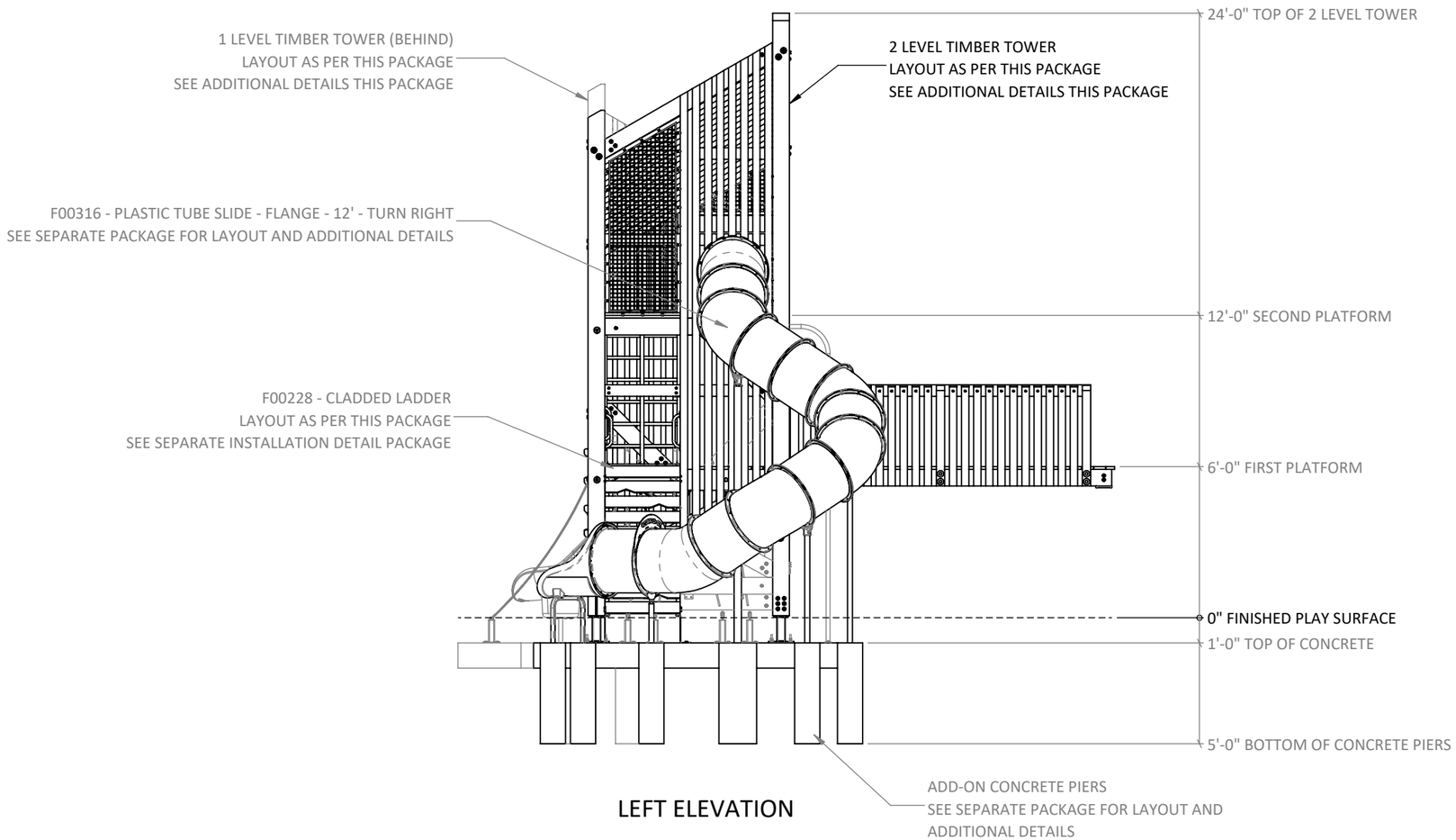

LEFT ELEVATION

PROPERTY OF EARTHSCAPE PLAY INC. - DO NOT COPY. DO NOT DISTRIBUTE.

LOCATE PLAY EQUIPMENT AND POUR TOWER PAD

STEP 1 - LOCATING THE EQUIPMENT ON SITE

Layout and mark the location of the equipment Reference Points (R.P.) on your site. Reference Points are taken from the outside corners of the tower base brackets. Refer to 1209039 - Modified Timber Bridge 12' to ensure the concrete is positioned with respect to the abutment for the bridge. The location of these points relative to the site is not within the scope of these instructions and should be provided by others.

Ensure you know what the designed elevation is for the finished safety surface. All heights provided in these instructions will be relative to the finished play surface. The finished surface elevation is not within the scope of these instructions and should be provided by others.

STEP 2 - LAYOUT CONCRETE PAD

Layout and mark the outer edge of concrete pad based off the Reference Points. Refer to Foundation Plan this sheet for details

Top of concrete is 305mm [12"] below finished play surface.

STEP 3 - EXCAVATE FOR CONCRETE PAD

Excavate area and prep as per Concrete Placement Detail SD-001B at the back of this package.

The foundation detail provided in these instructions has been developed assuming typical soil conditions specified in general notes. If the subgrade encountered does not meet these conditions, the subgrade must be improved or revisions made to this detail. Revisions to the detail are the responsibility of the installer and it is strongly recommended any changes be reviewed and approved by a registered engineer.

STEP 4 - POUR CONCRETE PAD

Form and pour timber tower concrete pads as per Foundation Plan this sheet and Concrete Placement Detail SD-001B on this sheet.

Allow concrete to cure prior to proceeding to Step 5.

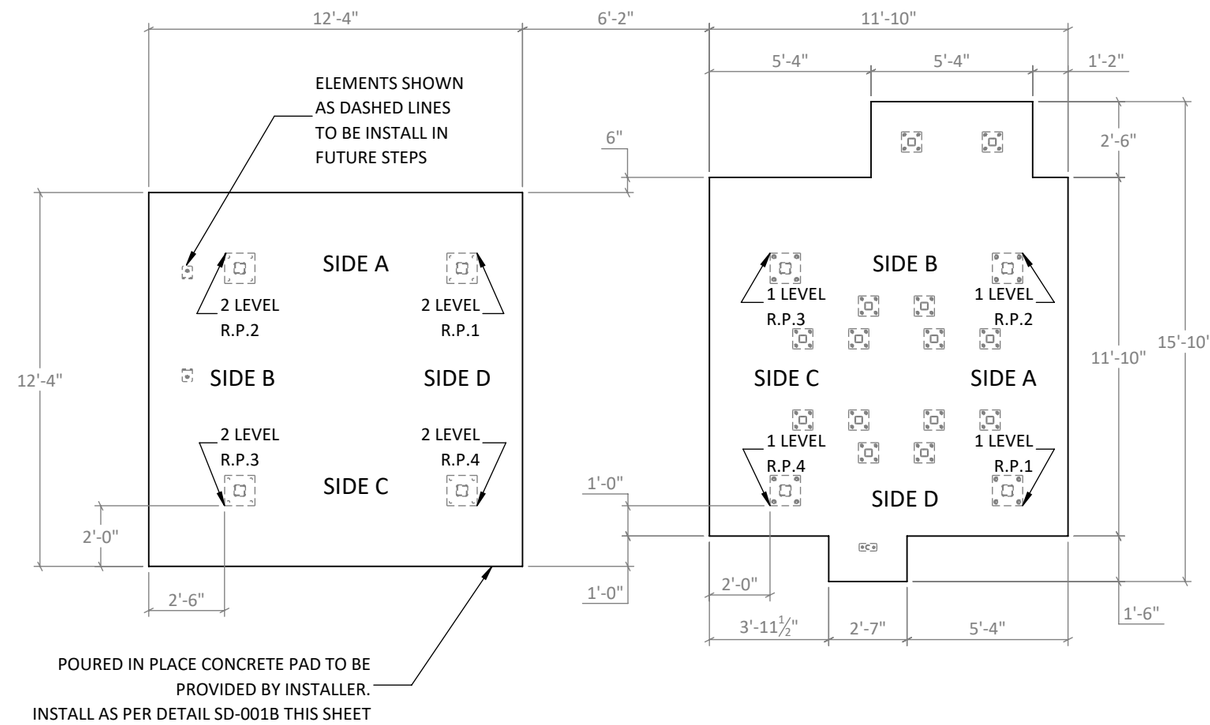

FOUNDATION PLAN

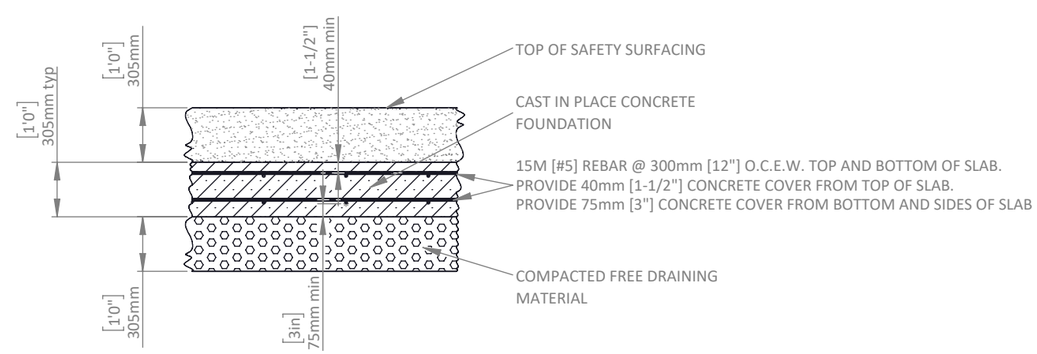

FOUNDATION NOTES:

1. TOP OF CONCRETE TO BE SET AT 300mm [12"] BELOW TOP OF SURFACING UNO.
2. SLAB TO BEAR ON MATERIAL BELOW THE FROST DEPTH, OR ALTERNATIVELY ON 300mm [12"] OF FREE DRAINING NON FROST SUSCEPTIBLE SOILS, COMPACTED TO 98% SPDD.

CONCRETE PLACEMENT DETAIL SD-001B

PROPERTY OF EARTHSCAPE PLAY INC. - DO NOT COPY. DO NOT DISTRIBUTE.

POSITION 2 LEVEL TIMBER TOWER

STEP 5 - POSITION TOWER

Layout and mark the location of the equipment Reference Points (R.P.) on the cured concrete pad as per this sheet.

Position the 2 Level Timber Tower on the foundation pad aligning it to the site reference points. Reference Points align with the outside corners of the tower base brackets. Refer to 1209039 - Modified Timber Bridge 12' to ensure the tower is centered with the concrete abutment for the bridge.

STEP 6 - INSTALL 12' MODIFIED WOODEN BRIDGE TO ABUTMENT

Install 1209039 - Modified Wooden Bridge 12' as per separate installation package. End of the bridge to secure to a concrete abutment provided by the installer

DO NOT ANCHOR TOWER TO THE FOUNDATION AT THIS TIME.

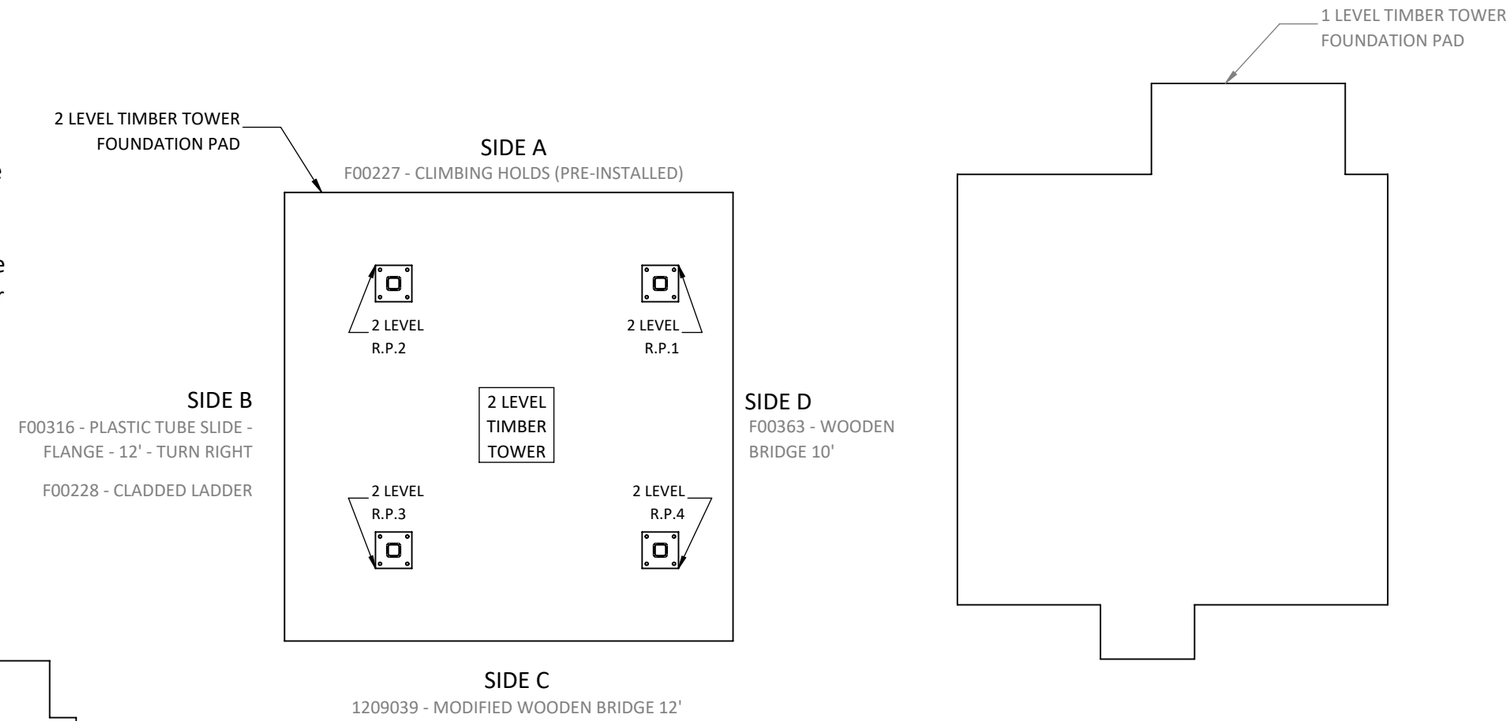

2 LEVEL TIMBER TOWER LAYOUT

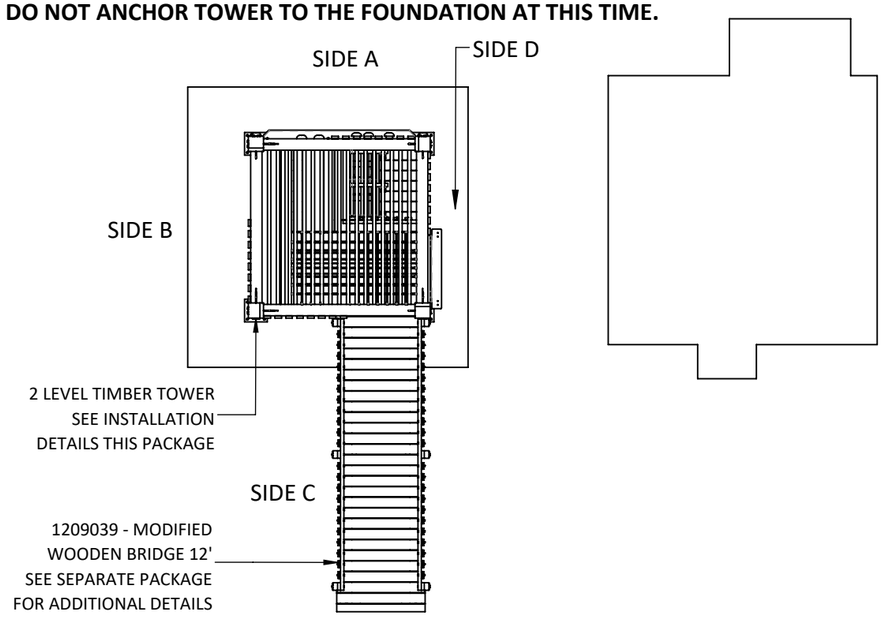

TOWER AT THE END OF STEP 6

PROPERTY OF EARTHSCAPE PLAY INC. - DO NOT COPY. DO NOT DISTRIBUTE.

STEP 7 - POSITION 1 LEVEL TOWER

Position the 1 Level Timber Tower on the foundation pad aligning it to the 2 Level Timber Tower as per the Layout this sheet.

STEP 8 - INSTALL 10' WOODEN BRIDGE

Install F00363 - Wooden Bridge 10' as per the separate installation package.

DO NOT ANCHOR TOWER TO THE FOUNDATION AT THIS TIME.

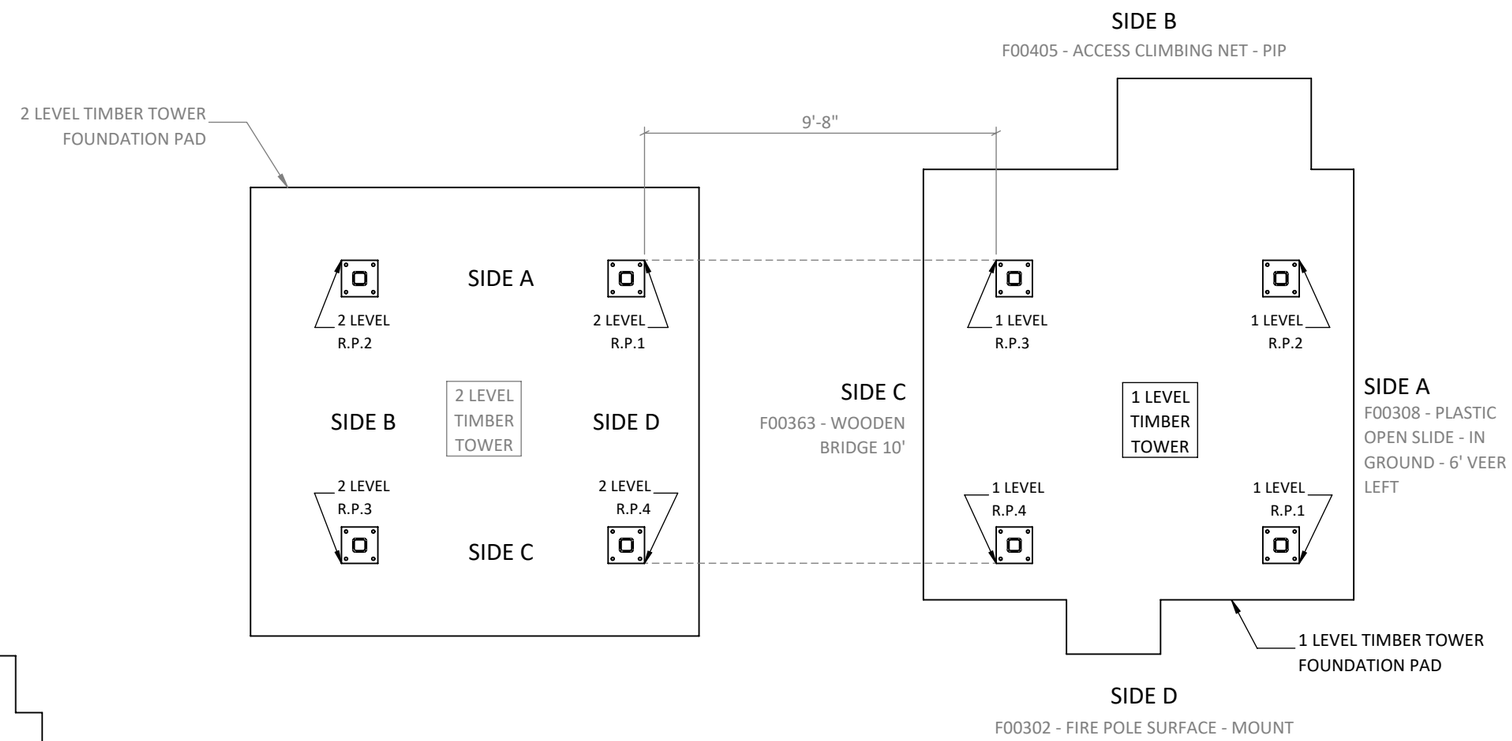

1 LEVEL TIMBER TOWER LAYOUT

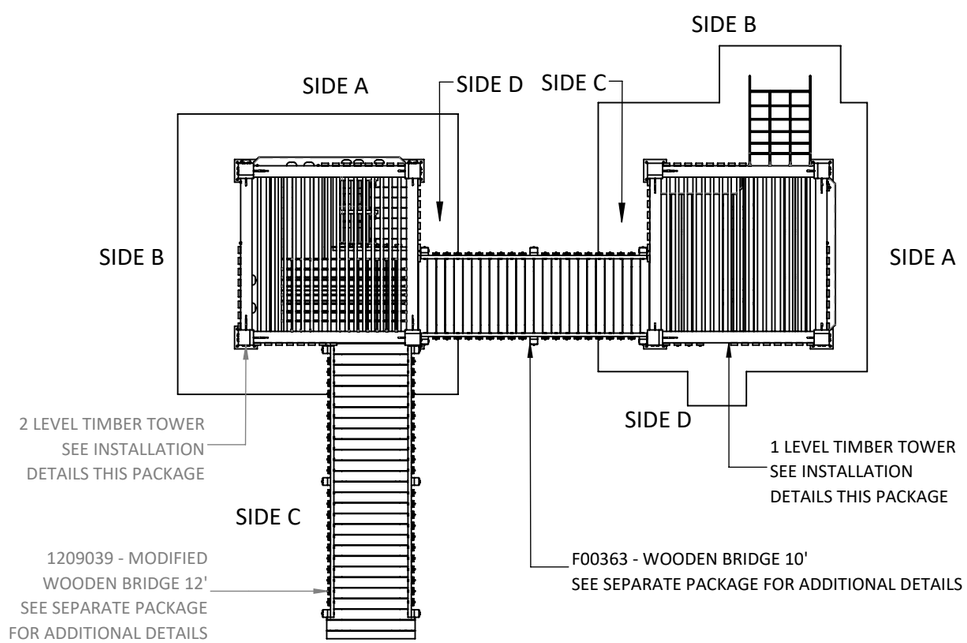

TOWER AT THE END OF STEP 8

PROPERTY OF EARTHSCAPE PLAY INC. - DO NOT COPY. DO NOT DISTRIBUTE.

STEP 9 - SECURE TOWERS TO FOUNDATION PAD

Secure both Timber Tower post base brackets to the concrete foundation pad as per SD-002B on this sheet.

Ensure excess threaded rod cut and ground after installation complete as noted on detail.

Anchoring of threaded rod with epoxy to be completed as per epoxy manufacturer's instructions.

MAINTAIN A MINIMUM ANCHOR ROD EDGE DISTANCE OF 100mm [4"].

HARDWARE REFERENCE LIST (PER CONNECTION)

ITEM NO.	PARTNO	DESCRIPTION	QTY.
1	H20019	Threaded Stud 3/4"-10 x 12" SS	4
2	H30047V	WASHER 3/4" X 1-3/4" SS	4
3	H40015	HEX NUT 3/4-10 SS	8

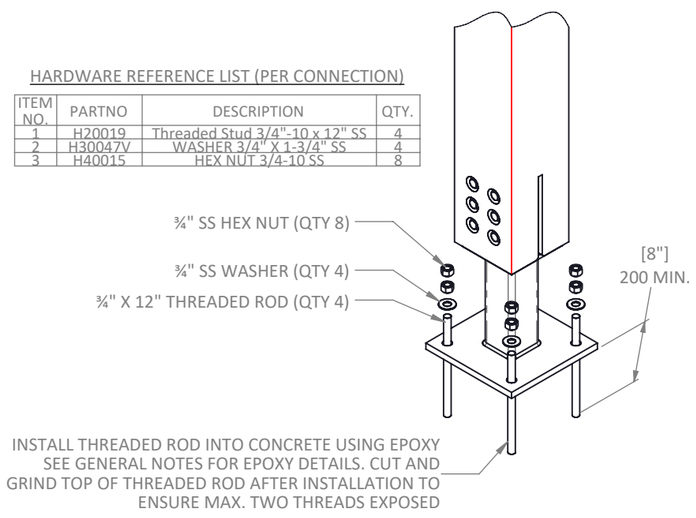

SD-002B

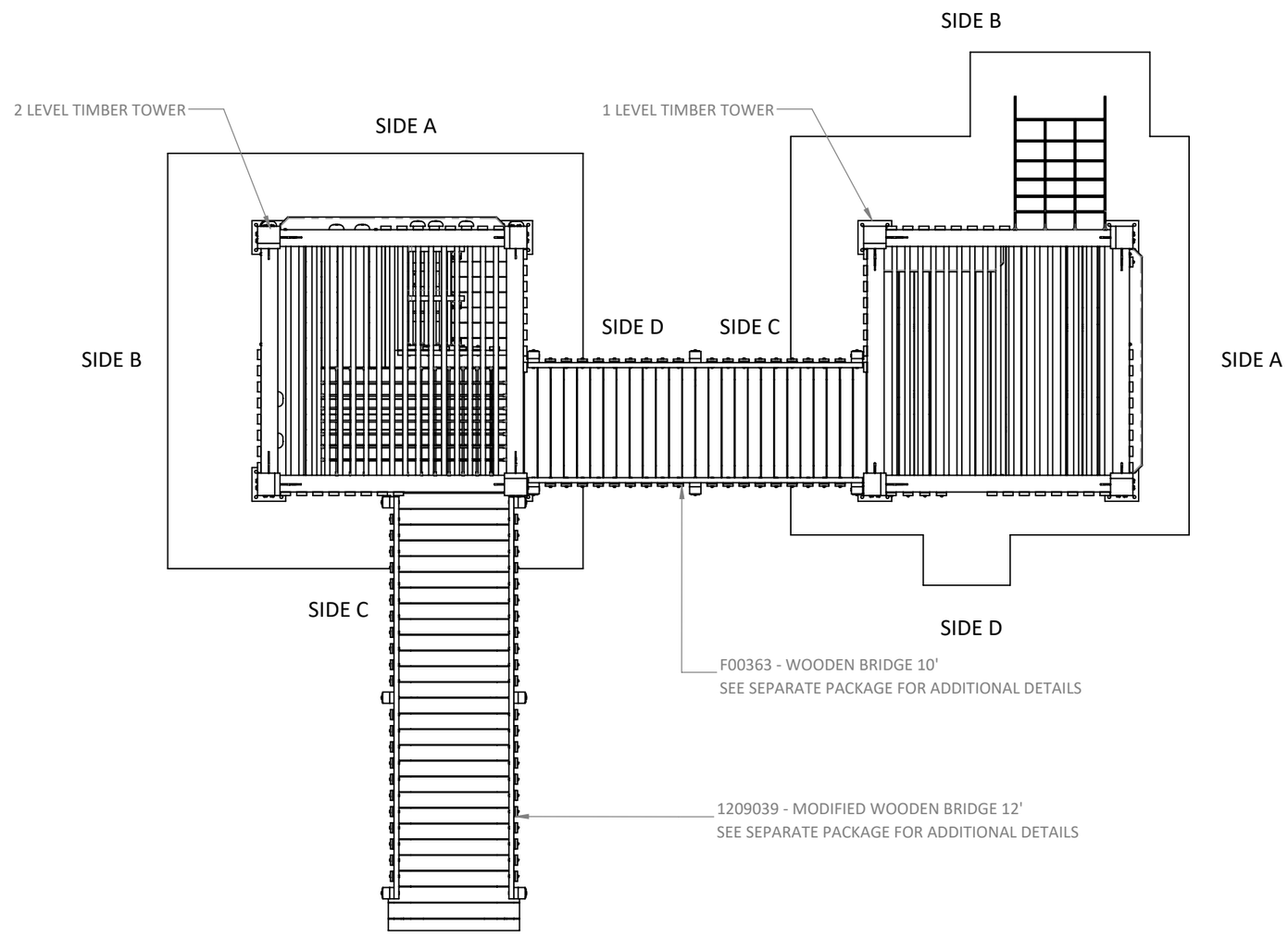

TOWER AT THE END OF STEP 9

PROPERTY OF EARTHSCAPE PLAY INC. - DO NOT COPY. DO NOT DISTRIBUTE.

STEP 10 - LOCATE AND INSTALL ADD-ONS

Refer to the layout drawing on this sheet to locate the add-ons relative to the timber towers.

Anchoring and other details relating to installation of the add-ons to be found in their separate installation packages.

1 LEVEL TIMBER TOWER ADD-ONS
F00302 - FILE POLE - SURFACE MOUNT - 6' PLATFORM
F00308 - PLASTIC OPEN SLIDE - IN GROUND - 6' - VEER LEFT
F00403 - SLING SEATS - PIP
F00405 - ACCESS CLIMBING NET - PIP

2 LEVEL TIMBER TOWER ADD-ONS
F00228 - CLADDED LADDER
F00316 - PLASTIC TUBE SLIDE - FLANGE - 12' - TURN RIGHT

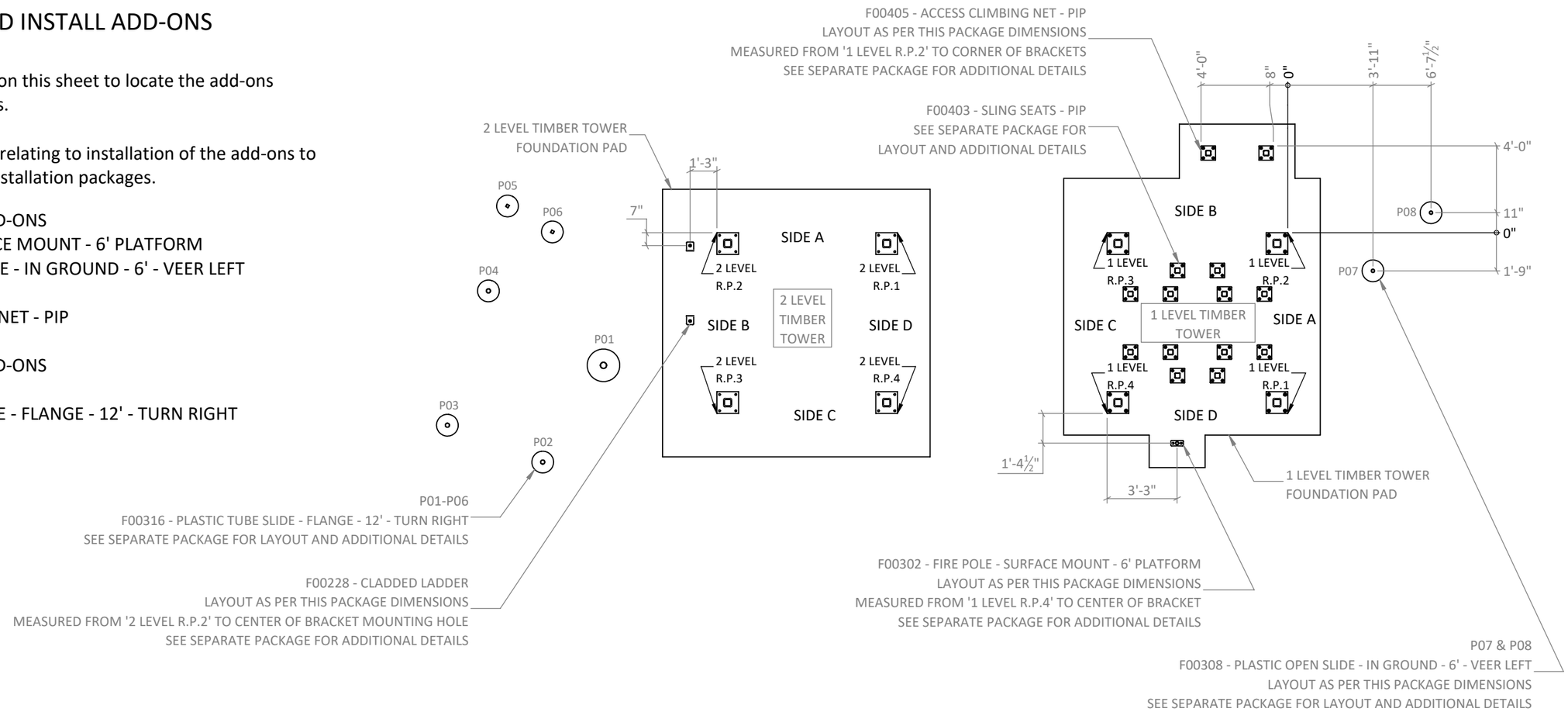

TOWER ADD-ON LAYOUT PLAN

PIER LAYOUT TABLE							
PIER I.D.	ADD-ON	PIER DIAMETER	PIER DEPTH	RAY FROM 1 LEVEL R.P.1	RAY FROM 1 LEVEL R.P.2	RAY FROM 1 LEVEL R.P.3	RAY FROM 1 LEVEL R.P.4
P07	F00308	∅1'-0"	5'-0"	7'-8"	4'-3½"	-	-
P08	F00308	∅1'-0"	5'-0"	11'-4½"	6'-8"	-	-

PROPERTY OF EARTHSCAPE PLAY INC. - DO NOT COPY. DO NOT DISTRIBUTE.

GENERAL NOTES

COMBINED ASSEMBLY

FOR CANADIAN INSTALLATION SITES USE THESE NOTES

GENERAL NOTES

1. THIS DRAWING IS THE PROPERTY OF EARTHSCAPE. DO NOT COPY OR DISTRIBUTE WITHOUT PERMISSION.
2. EARTHSCAPE RESERVES OWNERSHIP OF ALL DRAWINGS, SPECIFICATIONS, AND OTHER DOCUMENTS, INCLUDING THOSE IN ELECTRONIC FORM, AUTHORED BY EARTHSCAPE. UPON SIGNING CONTRACT, EARTHSCAPE GRANTS THE OWNER LIMITED LICENSE TO USE THE INSTRUMENTS OF SERVICE SOLELY FOR USING AND MAINTAINING, OR ADDING TO THE PROJECT
3. ENGINEERING AND STRUCTURAL REVIEW: EARTHSCAPE PROVIDES STAMPED DRAWINGS AND/OR STRUCTURAL LOAD TESTING FOR ONTARIO, AS REQUIRED BY CSA Z614. LOCAL ENGINEERING APPROVAL FOR JURISDICTIONS OUTSIDE ONTARIO, IF REQUIRED, TO BE PROVIDED BY OTHERS.
4. EARTHSCAPE DESIGNS AND ENGINEERS FOR A FROST PENETRATION DEPTH OF 1200mm. SLAB ON GRADE CONSTRUCTION IS SUBJECT TO FROST MOVEMENTS. FREE DRAINING SOIL UNDER THE FOOTING IS USED TO MINIMIZE FROST EFFECTS. OVERALL TOWER/SLAB MOVEMENT MAY OCCUR.
5. INSPECTION AND TESTING: INSPECTION, TESTING (INCLUDING CONCRETE TESTING), PRE-CONSTRUCTION SURVEYS TO BE COMPLETED BY OTHERS.
6. SURFACING: WHEN AN IMPACT-ABSORBING SURFACE MATERIAL IS REQUIRED, IT MUST COMPLY WITH CSA Z614 (MOST RECENT EDITION) FOR THE DEFINED FALL HEIGHT OF THE EQUIPMENT SPECIFIED IN DRAWINGS BY EARTHSCAPE OR A CONTRACTUALLY OBLIGATED CRITICAL HEIGHT SPECIFIED IN ADVANCE. ENSURE USE ZONES, SAFETY ZONES, AND/OR PROTECTIVE SURFACING ZONES AROUND ALL PLAY EQUIPMENT ARE COMPLIANT WITH CSA Z614 (MOST RECENT EDITION) - BY OTHERS.
7. SURVEY AND FACILITIES: SURVEY WORK INCLUDING BENCHMARKS, LINES AND LEVELS, PRE-CONSTRUCTION SURVEY, AS-BUILT DRAWINGS BY OTHERS
8. THESE DRAWINGS ARE INTENDED TO BE PRINTED AT 11" X 17" PAGE SIZE. DO NOT SCALE
9. ALL MEASUREMENTS ARE IN METRES (m) UNLESS OTHERWISE STATED
10. EQUIPMENT SHALL COMPLY WITH THE REQUIREMENTS OF CAN/CSA-Z614 (MOST RECENT EDITION) "CHILDREN'S PLAYSPACES AND EQUIPMENT"
11. VISUAL DETAILS INCLUDING BUT NOT LIMITED TO: NET SPACING, ROPE APPEARANCE AND COLOURS ARE FOR CONCEPTUAL PURPOSES ONLY
12. ALWAYS WEAR PROPER PPE AND FOLLOW SAFE PRACTICES.
13. ALL WORK SHALL BE COMPLETED IN ACCORDANCE WITH THE OCCUPATIONAL HEALTH AND SAFETY ACT.
14. CONTRACTOR IS RESPONSIBLE FOR CONFIRMING ALL SITE CONDITIONS AND REPORTING DISCREPANCIES TO EARTHSCAPE IMMEDIATELY.
15. EARTHSCAPE IS NOT RESPONSIBLE FOR THIRD PARTY USE OF THESE DRAWINGS

FASTENERS:

1. METRIC/IMPERIAL DIAMETER CONVERSIONS OF TYPICAL SIZES:
   1. 8mm=5/16", 10mm=3/8", 12mm=1/2", 25mm=1"
   2. ROUND UP TO NEAREST STANDARD LENGTH FOR MANUFACTURER
2. ALL FASTENERS ARE TO BE STAINLESS STEEL (UNLESS OTHERWISE NOTED)
3. ALL BOLT HOLES SHALL BE PRE-DRILLED AND SHALL BE NOT LESS THAN 1mm AND NOT GREATER THAN 2mm LARGER THAN THE NOMINAL HOLE DIAMETER
4. FOR PARTIALLY THREADED SCREWS, EMBED FULL THREAD INTO SECONDARY MEMBER OR TO A DEPTH AS SPECIFIED ON DRAWINGS.
5. WHERE PRE-DRILLING OF SCREWS IS RECOMMENDED BY THE SCREW MANUFACTURER, HOLE DIAMETER TO BE STRICTLY AS PER MANUFACTURER'S INSTRUCTIONS.
6. DO NOT USE IMPACT DRILLS FOR SCREW INSTALLATION.
7. DO NOT USE A HAMMER TO ENGAGE THE FASTENER WITH THE WOOD.
8. ALL FASTENERS TO BE INSTALLED AS POSITIONED ON DRAWINGS.
9. ALL BOLTED CONNECTIONS ARE TO BE SECURED USING VIBRA-TITE "VC-3" THREAD-LOCKING FLUID OR EQUIVALENT

EXCAVATION AND BACKFILL

1. STRIP ALL TOP SOIL, PAVING, AND DELETERIOUS MATERIAL FROM UNDER FOOTINGS.
2. LOCATE ALL SERVICES PRIOR TO COMPLETING EXCAVATION.
3. ALL FOOTINGS SHALL BE PLACED AT A MINIMUM OF 1200mm BELOW GRADE UNLESS OTHERWISE NOTED ON THE DRAWINGS.
4. SUPPORTING SUBGRADE AND FILL TO HAVE A MINIMUM BEARING CAPACITY OF 150 kPa.
5. ALL FOOTINGS AND SLABS TO BE PLACED ON EITHER NATIVE GRAVEL/SAND/CLAY OR 150mm OF GRANULAR A COMPACTED TO A MINIMUM STANDARD PROCTOR DRY DENSITY OF 98%.
6. BENEATH 150mm TOP LAYER OF COMPACTED GRANULAR A, GRANULAR B FILL CAN BE USED AS REQUIRED PLACED IN MAXIMUM 200mm LIFTS, COMPACTED TO A STANDARD PROCTOR DRY DENSITY OF 96%.
7. CONTRACTOR IS RESPONSIBLE FOR SUPPORT OF EXCAVATIONS DURING CONSTRUCTION AS REQUIRED.

CONCRETE

1. ALL CONCRETE WORK AND MATERIALS SHALL BE IN ACCORDANCE WITH CAN/CSA A23.1/2
2. ALL REINFORCING STEEL TO BE IN ACCORDANCE WITH CAN/CSA A23.1/2 INCLUDING FABRICATION, DETAILING, LAP SPLICES, PLACEMENT, FIXING AND COVER.
3. REINFORCING STEEL SHALL COMPLY WITH CAN/CSA G40.18
4. DO NOT ADD WATER TO CONCRETE ONSITE.
5. ENSURE A MINIMUM COVER OF 75mm TO THE GROUND IN ALL BELOW GRADE CONCRETE.
6. CONCRETE MATERIAL TO BE:
   1. FOOTINGS: CLASS F-2 CONCRETE WITH A MINIMUM 28 DAY COMPRESSIVE STRENGTH OF 25 MPa, MAXIMUM WATER/CEMENT RATIO OF 0.55, MAXIMUM COARSE AGGREGATE SIZE OF 20mm, 4-7% AIR CONTENT, AND A MAXIMUM SLUMP OF 50-100mm.
   2. SLAB ON GRADE: CLASS C-2 CONCRETE WITH A MINIMUM 28 DAY COMPRESSIVE STRENGTH OF 32 MPa, MAXIMUM WATER/CEMENT RATIO OF 0.45, MAXIMUM COARSE AGGREGATE SIZE OF 20mm, 5-8% AIR CONTENT AND A MAXIMUM SLUMP OF 50-100mm.
7. CONCRETE REINFORCING TO DEFORMED MINIMUM YIELD STRENGTH OF 400 MPa
8. PIT RUN GRAVEL WILL NOT BE ACCEPTABLE.
9. ALL REINFORCING CHAIRS SHALL BE PLASTIC
10. ALL FORM OIL TO BE NON-STAINING MINERAL OIL, FREE OF KEROSENE.
11. WELDED WIRE MESH SHALL BE IN ACCORDANCE WITH ASTM A1064.
12. VIBRATE ALL CONCRETE TO ENSURE THAT CONCRETE IS FREE FROM VOIDS AND OTHER DEFECTS.
13. MOIST CURE ALL CONCRETE 7 DAYS.
14. IN HOT OR COLD WEATHER CONDITIONS TAKE ADDITIONAL PRECAUTIONS AS PER CAN/CSA A23.1/2.
15. UNLESS NOTED OTHERWISE, FASTEN ALL HARDWARE TO CONCRETE USING EITHER:
    1. SIMPSON STRONG TIE "TITEN HD" Ø½ X 5" SS CONCRETE SCREW
    2. THREADED ROD WITH SIMPSON STRONG TIE "SET 3G" OR HILTI "HY-200" EPOXY.
    3. REFER TO RESPECTIVE MANUFACTURER's INSTRUCTIONS FOR INSTALLATION PROCEDURE

FOR U.S. INSTALLATION SITES USE THESE NOTES

GENERAL NOTES

1. THIS DRAWING IS THE PROPERTY OF EARTHSCAPE. DO NOT COPY OR DISTRIBUTE WITHOUT PERMISSION.
2. EARTHSCAPE RESERVES OWNERSHIP OF ALL DRAWINGS, SPECIFICATIONS, AND OTHER DOCUMENTS, INCLUDING THOSE IN ELECTRONIC FORM, AUTHORED BY EARTHSCAPE. UPON SIGNING CONTRACT, EARTHSCAPE GRANTS THE OWNER LIMITED LICENSE TO USE THE INSTRUMENTS OF SERVICE SOLELY FOR USING AND MAINTAINING, OR ADDING TO THE PROJECT
3. ENGINEERING AND STRUCTURAL REVIEW: EARTHSCAPE PROVIDES STAMPED DRAWINGS AND/OR STRUCTURAL LOAD TESTING FOR ONTARIO, AS REQUIRED BY ASTM F-1487-17. LOCAL ENGINEERING APPROVAL FOR JURISDICTIONS OUTSIDE ONTARIO, IF REQUIRED, TO BE PROVIDED BY OTHERS.
4. EARTHSCAPE DESIGNS AND ENGINEERS FOR A FROST PENETRATION DEPTH OF 48". SLAB ON GRADE CONSTRUCTION IS SUBJECT TO FROST MOVEMENTS. FREE DRAINING SOIL UNDER THE FOOTING IS USED TO MINIMIZE FROST EFFECTS. OVERALL TOWER/SLAB MOVEMENT MAY OCCUR.
5. INSPECTION AND TESTING: INSPECTION, TESTING (INCLUDING CONCRETE TESTING), PRE-CONSTRUCTION SURVEYS TO BE COMPLETED BY OTHERS.
6. SURFACING: WHEN AN IMPACT-ABSORBING SURFACE MATERIAL IS REQUIRED, IT MUST COMPLY WITH ASTM F-1292 (MOST RECENT EDITION) FOR THE DEFINED FALL HEIGHT OF THE EQUIPMENT SPECIFIED IN DRAWINGS BY EARTHSCAPE OR A CONTRACTUALLY OBLIGATED CRITICAL HEIGHT SPECIFIED IN ADVANCE. ENSURE USE ZONES, SAFETY ZONES, AND/OR PROTECTIVE SURFACING ZONES AROUND ALL PLAY EQUIPMENT ARE COMPLIANT WITH ASTM F-1292 (MOST RECENT EDITION) - BY OTHERS.
7. SURVEY AND FACILITIES: SURVEY WORK INCLUDING BENCHMARKS, LINES AND LEVELS, PRE-CONSTRUCTION SURVEY, AS-BUILT DRAWINGS BY OTHERS
8. THESE DRAWINGS ARE INTENDED TO BE PRINTED AT 11" X 17" PAGE SIZE. DO NOT SCALE
9. ALL MEASUREMENTS ARE IN FEET-INCHES UNLESS OTHERWISE STATED
10. EQUIPMENT SHALL COMPLY WITH THE REQUIREMENTS OF ASTM F1487-17 "STANDARD CONSUMER SAFETY PERFORMANCE SPECIFICATION FOR PLAYGROUND EQUIPMENT"
11. VISUAL DETAILS INCLUDING BUT NOT LIMITED TO: NET SPACING, ROPE APPEARANCE AND COLOURS ARE FOR CONCEPTUAL PURPOSES ONLY
12. ALWAYS WEAR PROPER PPE AND FOLLOW SAFE PRACTICES.
13. ALL WORK SHALL BE COMPLETED IN ACCORDANCE WITH THE OCCUPATIONAL HEALTH AND SAFETY ACT.
14. CONTRACTOR IS RESPONSIBLE FOR CONFIRMING ALL SITE CONDITIONS AND REPORTING DISCREPANCIES TO EARTHSCAPE IMMEDIATELY.
15. EARTHSCAPE IS NOT RESPONSIBLE FOR THIRD PARTY USE OF THESE DRAWINGS

FASTENERS

1. METRIC/IMPERIAL DIAMETER CONVERSIONS:
   1. 8mm=5/16", 10mm=3/8", 12mm=1/2", 25mm=1"
   2. ROUND UP TO NEAREST STANDARD LENGTH FOR MANUFACTURER
2. ALL FASTENERS ARE TO BE STAINLESS STEEL (UNLESS OTHERWISE NOTED)
3. ALL BOLT HOLES SHALL BE PRE-DRILLED AND SHALL BE NOT LESS THAN 3/64" AND NOT GREATER THAN 5/64" LARGER THAN THE NOMINAL HOLE DIAMETER
4. FOR PARTIALLY THREADED SCREWS, EMBED FULL THREAD INTO SECONDARY MEMBER OR TO A DEPTH AS SPECIFIED ON DRAWINGS.
5. WHERE PRE-DRILLING OF SCREWS IS RECOMMENDED BY THE SCREW MANUFACTURER, HOLE DIAMETER TO BE STRICTLY AS PER MANUFACTURER'S RECOMMENDATIONS.
6. DO NOT USE IMPACT DRILLS FOR SCREW INSTALLATION.
7. DO NOT USE A HAMMER TO ENGAGE THE FASTENER WITH THE WOOD.
8. ALL FASTENERS TO BE INSTALLED AS POSITIONED ON SHOP DRAWINGS.
9. ALL BOLTED CONNECTIONS ARE TO BE SECURED USING VIBRA-TITE "VC-3" THREAD-LOCKING FLUID OR EQUIVALENT

EXCAVATION AND BACKFILL

1. STRIP ALL TOP SOIL, PAVING, AND DELETERIOUS MATERIAL FROM UNDER FOOTINGS.
2. LOCATE ALL SERVICES PRIOR TO COMPLETING EXCAVATION.
3. ALL FOOTINGS SHALL BE PLACED AT A MINIMUM OF 4' BELOW GRADE UNLESS OTHERWISE NOTED ON THE DRAWINGS.
4. SUPPORTING SUBGRADE AND FILL TO HAVE A MINIMUM BEARING CAPACITY OF 3000PSF.
5. ALL FOOTINGS AND SLABS TO BE PLACED ON EITHER NATIVE GRAVEL/SAND/CLAY OR 6" OF GRANULAR A COMPACTED TO A MINIMUM STANDARD PROCTOR DRY DENSITY OF 98%.
6. BENEATH 6" TOP LAYER OF COMPACTED GRANULAR A, GRANULAR B FILL CAN BE USED AS REQUIRED PLACED IN MAXIMUM 8" LIFTS, COMPACTED TO A STANDARD PROCTOR DRY DENSITY OF 96%.
7. CONTRACTOR IS RESPONSIBLE FOR SUPPORT OF EXCAVATIONS DURING CONSTRUCTION AS REQUIRED.

CONCRETE

1. ALL CONCRETE WORK AND MATERIALS SHALL BE IN ACCORDANCE WITH ACI-301
2. ALL REINFORCING STEEL TO BE IN ACCORDANCE WITH ASTM A615 AND ACI-301 INCLUDING FABRICATION, DETAILING, LAP SPLICES, PLACEMENT, FIXING AND COVER.
3. REINFORCING STEEL SHALL COMPLY WITH ASTM A615
4. DO NOT ADD WATER TO CONCRETE ONSITE.
5. ENSURE A MINIMUM COVER OF 3" TO THE GROUND IN ALL BELOW GRADE CONCRETE.
6. CONCRETE MATERIAL TO BE:
   1. FOOTINGS AND SLABS: CONCRETE WITH A MINIMUM 28 DAY COMPRESSIVE STRENGTH OF 4000 PSI, MAXIMUM WATER/CEMENT RATIO OF 0.50, MAXIMUM COARSE AGGREGATE SIZE OF 3/4", 4-7% AIR CONTENT (WHERE CONCRETE PLACED ABOVE FROST), AND A MAXIMUM SLUMP OF 2 - 4 INCHES.
7. CONCRETE REINFORCING TO DEFORMED MINIMUM YIELD STRENGTH OF 58000 PSI
8. PIT RUN GRAVEL WILL NOT BE ACCEPTABLE.
9. ALL REINFORCING CHAIRS SHALL BE PLASTIC
10. ALL FORM OIL TO BE NON-STAINING MINERAL OIL, FREE OF KEROSENE.
11. WELDED WIRE MESH SHALL BE IN ACCORDANCE WITH ASTM A1064.
12. VIBRATE ALL CONCRETE TO ENSURE THAT CONCRETE IS FREE FROM VOIDS AND OTHER DEFECTS.
13. MOIST CURE ALL CONCRETE 7 DAYS.
14. IN HOT OR COLD WEATHER CONDITIONS TAKE ADDITIONAL PRECAUTIONS AS PER ACI 305 OR 306 RESPECTIVELY.
15. UNLESS NOTED OTHERWISE, FASTEN ALL HARDWARE TO CONCRETE USING EITHER:
    1. SIMPSON STRONG TIE "TITEN HD" Ø½ X 5" SS CONCRETE SCREW
    2. THREADED ROD WITH SIMPSON STRONG TIE "SET 3G" OR HILTI "HY-200" EPOXY
    3. REFER TO RESPECTIVE MANUFACTURER'S INSTRUCTIONS FOR INSTALLATION PROCEDURE
    4.

PROPERTY OF EARTHSCAPE PLAY INC. - DO NOT COPY. DO NOT DISTRIBUTE.

INSTALLATION INSTRUCTIONS

EARTHSCAPE COLLECTIONS

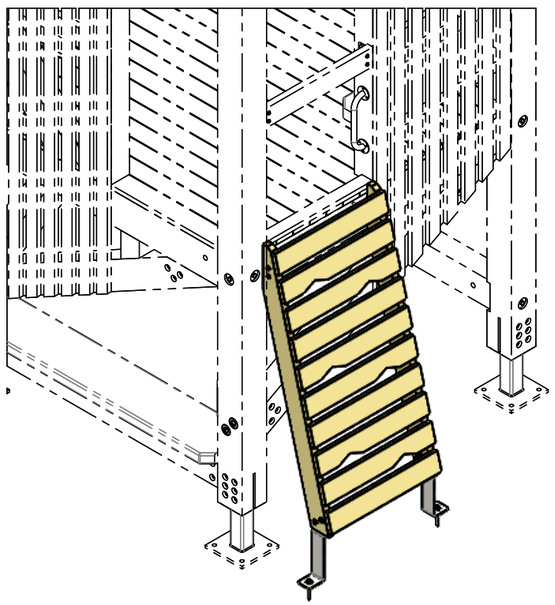

LICENSED PROFESSIONAL ENGINEER
M. JOHNSON
100514620
Sep 22, 2025
PROVINCE OF ONTARIO

WITZEL DYCE
ENGINEERING INC.
PROJECT NO.: 12936-165

CLADDING LADDER

THESE INSTRUCTIONS APPLY TO THE FOLLOWING VERSIONS OF THIS PRODUCT:

F00228 - CLADDING LADDER

WHICH IS DESIGNED TO BE INSTALLED ON THE FOLLOWING PRODUCTS:

1 LEVEL TIMBER TOWER
2 LEVEL TIMBER TOWER
3 LEVEL TIMBER TOWER

NOTE: COLOURS SHOWN ARE REPRESENTATIONAL AND MAY NOT BE THE SAME AS THOSE OF THE SUPPLIED PRODUCT

FOR CSA AND ASTM SPECIFICATIONS AND GENERAL NOTES SEE MAIN STRUCTURE INSTALLATION PACKAGE

PROPERTY OF EARTHSCAPE PLAY INC. - DO NOT COPY. DO NOT DISTRIBUTE.

PLEASE READ ALL INSTRUCTIONS

Before starting to install this equipment be sure to read through and understand these instructions.

If you have any questions, contact your local dealer for assistance before proceeding.

MEASUREMENTS AND STANDARDS

Measurements have been provided in both metres and [feet-inches]. Ensure to follow standards noted for the location in which this play equipment is being installed. Those marked CSA are to be used in Canada and those marked ASTM to be used in the United States.

LIST OF ABBREVIATIONS

AYC = Alaskan Yellow Cedar
WRC = Western Red Cedar
DPS = Designated Play Surface
SS = Stainless Steel
HDG = Hot Dipped Galvanized
WWM = Welded Wire Mesh
TYP = Typical
C/W = Complete With
UNO = Unless Noted Otherwise
EWF = Engineered Wood Fiber
PIP = Poured-In-Place Rubber Surfacing
PT = Pressure Treated

TOOLS SUPPLIED WITH THIS PRODUCT

- No tools supplied

TOOLS THE INSTALLER NEEDS TO SUPPLY

- High torque drill
- 1/2" impact driver
- Set of wood drill bits - up to 1/2"
- Set of impact sockets - up to 1"
- 1/2" ratcheting socket wrench
- T25 drive bit
- T40 drive bit
- Hammer drill
- Concrete drill bit, 1/2" x 8"

EQUIPMENT THE INSTALLER NEEDS TO SUPPLY

- No special equipment required

INSTALLER CREW AND TIME REQUIRED

Number of people needed: 2
Typical total person-hours to install: 2
Time breakdown:

- 1 hours x 2 people to position and anchor the ladder in place

MATERIALS THE INSTALLER NEEDS TO SUPPLY

No additional materails required

WARNINGS

These instructions do not provide specific guidance on the use of tools or the lifting and moving heavy objects. It is assumed that competent people are installing this product who are familiar with using the tools and equipment required and are knowledgeable and skilled at lifting and positioning heavy objects.

PROPERTY OF EARTHSCAPE PLAY INC. - DO NOT COPY. DO NOT DISTRIBUTE.

MAKE SURE YOU HAVE ALL THE PARTS

Examine the equipment and ensure you have all the required parts listed in the table below.

PART IMAGE	ITEM NO.	PART NO.	DESCRIPTION	QTY.
	1	H30059	WASHER 5/8" X 1-1/2" SS	2
	2	H60020	TITEN HD 1/2" X 5" CONCRETE SCREW	2
	3	H16715	WOOD SCREW, WASHER HEAD, M8x80, SS	4
SEE IMAGE THIS SHEET	4		PRE-ASSEMBLED CLADDING LADDER	1

IMAGES OF FASTENERS IN THIS TABLE ARE REPRESENTATIONAL TO HELP IDENTIFY PARTS.

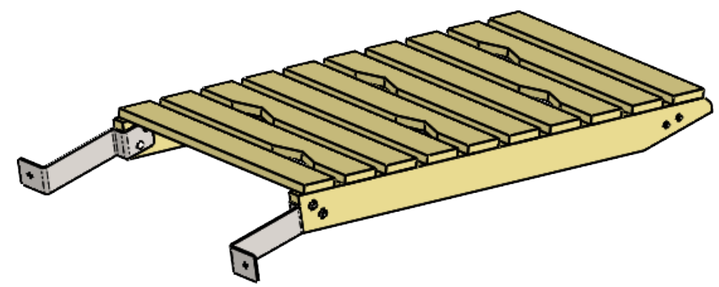

4 PRE-ASSEMBLED CLADDING LADDER

PROPERTY OF EARTHSCAPE PLAY INC. - DO NOT COPY. DO NOT DISTRIBUTE.

CLADDED LADDER INSTALLATION

CLADDING LADDER

STEP 1 - CONFIRM WHERE THE ACCESSORY IS TO BE INSTALLED

Review the complete tower installation package to determine on which side this accessory is to be installed and what the finished product should look like. The images shown on this page are representational and may not match your exact installation.

STEP 2 - POSITION LADDER

Align ladder with correct opening and position so top of ladder is flush with top of grab rail noted in Section A-A this sheet

Bottom of ladder should be located as per dimension noted in Section A-A

STEP 3 - SECURE TOP OF LADDER TO TOWER

You will need to remove the top one or two boards from the ladder to access the attachment brackets. Make sure to save screws and boards to be reinstalled after ladder secured.

Pre-drill holes for screws then screw brackets to timber beam as per Detail B this sheet.

Reinstall removed boards.

STEP 4 - SECURE LADDER BASE BRACKETS TO CONCRETE PAD

Confirm bottom of ladder is still in the correct location as per Step 2, then pre-drill holes in concrete pad and anchor the base bracket to the pad as per Detail C this sheet.

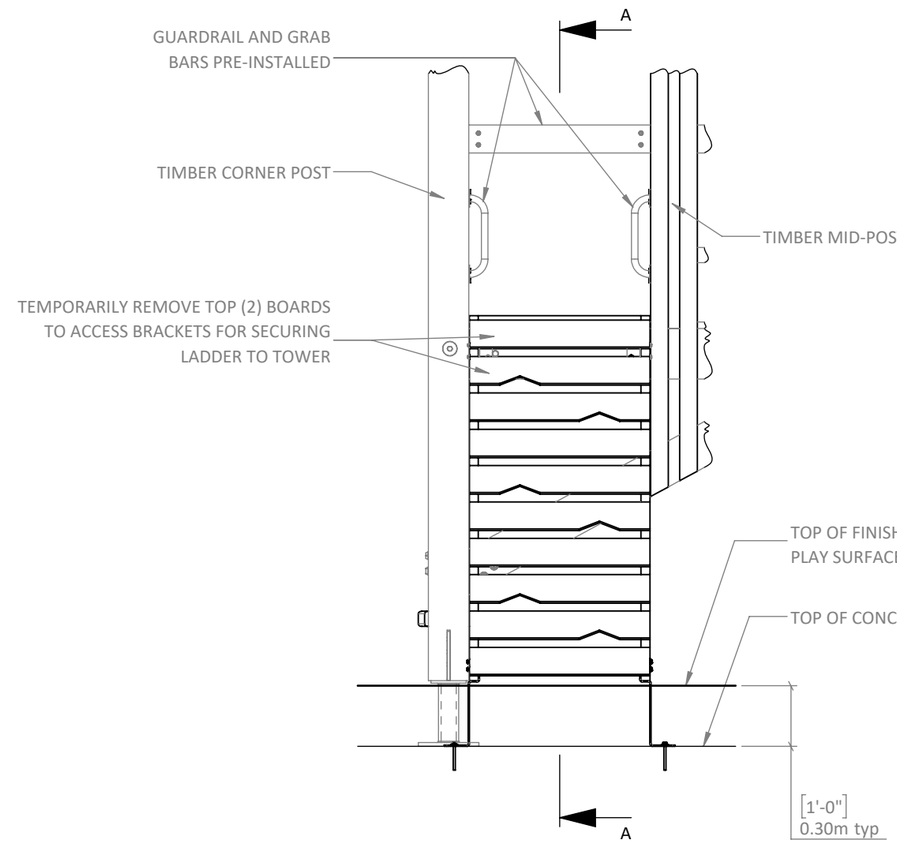

SAMPLE ELEVATION

(ACTUAL INSTALLATION MIGHT BE A MIRRORED VERSION OF THIS VIEW)

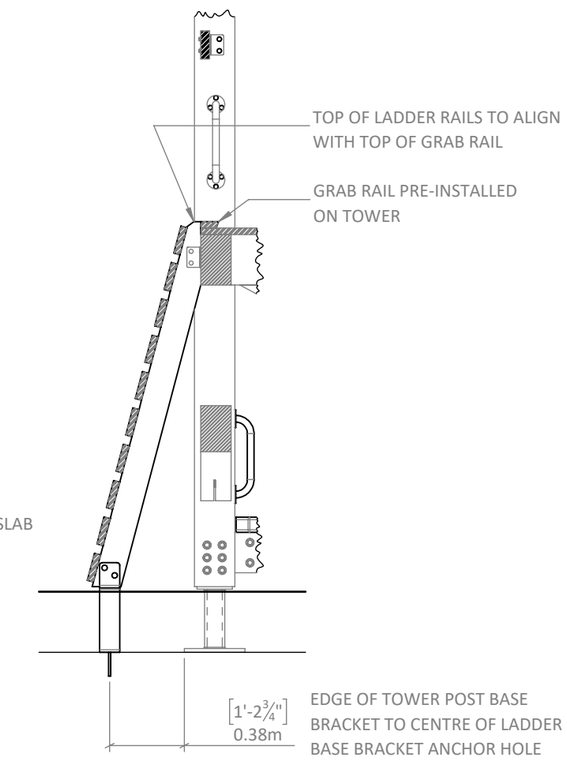

SECTION A-A

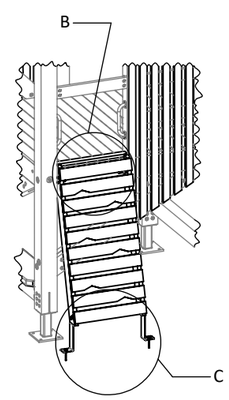

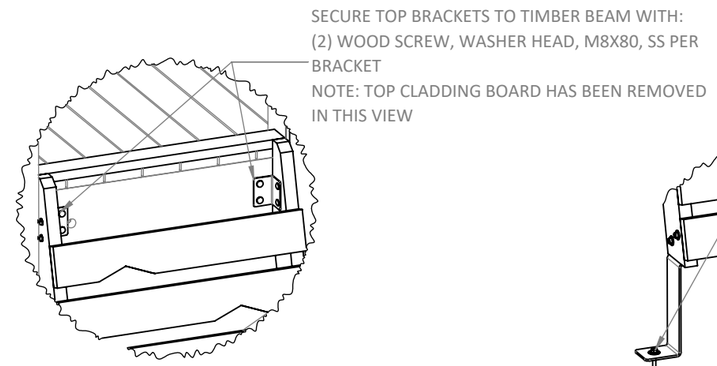

DETAIL B

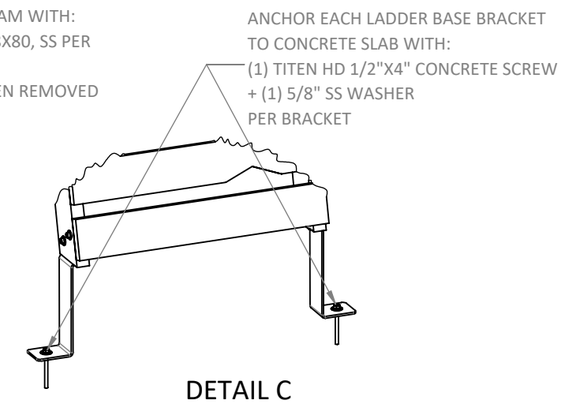

DETAIL C

PROPERTY OF EARTHSCAPE PLAY INC. - DO NOT COPY. DO NOT DISTRIBUTE.

INSTALLATION INSTRUCTIONS

EARTHSCAPE COLLECTIONS

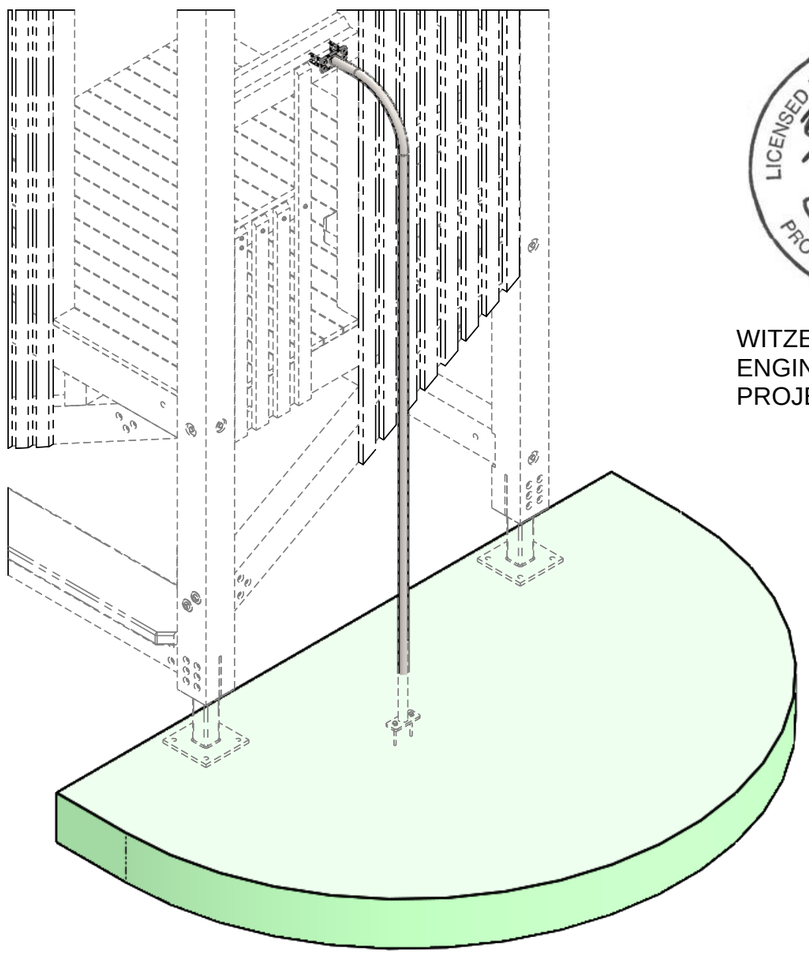

WITZEL DYCE
ENGINEERING INC.
PROJECT NO.: 12936-165

FIRE POLE

THESE INSTRUCTIONS APPLY TO THE FOLLOWING VERSIONS OF THIS PRODUCT:

F00302 - FIRE POLE - SURFACE MOUNT - 6' PLATFORM

WHICH IS DESIGNED TO BE INSTALLED ON THE FOLLOWING PRODUCTS:

1 LEVEL TIMBER TOWERS
2 LEVEL TIMBER TOWER
3 LEVEL TIMBER TOWER

NOTE: COLOURS SHOWN ARE REPRESENTATIONAL AND MAY NOT BE THE SAME AS THOSE OF THE SUPPLIED PRODUCT

FOR CSA AND ASTM SPECIFICATIONS AND GENERAL NOTES SEE MAIN STRUCTURE INSTALLATION PACKAGE

DATE DOCUMENT RELEASED 2024-06-17
DOCUMENT NUMBER: 1051479-R4

PROPERTY OF EARTHSCAPE PLAY INC. - DO NOT COPY. DO NOT DISTRIBUTE.

PLEASE READ ALL INSTRUCTIONS

Before starting to install this equipment be sure to read through and understand these instructions.
If you have any questions, contact your local dealer for assistance before proceeding.

MEASUREMENTS AND STANDARDS

Measurements have been provided in both metres and [feet-inches]. Ensure to follow standards noted for the location in which this play equipment is being installed. Those marked CSA are to be used in Canada and those marked ASTM to be used in the United States.

LIST OF ABBREVIATIONS

AYC = Alaskan Yellow Cedar
WRC = Western Red Cedar
DPS = Designated Play Surface
SS = Stainless Steel
HDG = Hot Dipped Galvanized
WWM = Welded Wire Mesh
TYP = Typical
C/W = Complete With
UNO = Unless Noted Otherwise
EWF = Engineered Wood Fiber
PIP = Poured-In-Place Rubber Surfacing
PT = Pressure Treated

TOOLS SUPPLIED WITH THIS PRODUCT

- No tools supplied

TOOLS THE INSTALLER NEEDS TO SUPPLY

- High torque drill
- Set of wood drill bits - up to 1/2"
- 1/2" impact driver
- Set of impact sockets - up to 1"
- 1/2" ratcheting socket wrench
- T25 drive bit
- T40 drive bit
- Hammer drill
- Concrete drill bit, 1/2" x 8"

EQUIPMENT THE INSTALLER NEEDS TO SUPPLY

- No special equipment required

INSTALLER CREW AND TIME REQUIRED

Number of people needed: 2
Typical total person-hours to install: 2
Time breakdown:

- 1 hour x 2 to position and anchor the fire pole

MATERIALS THE INSTALLER NEEDS TO SUPPLY

- No special materials required

WARNINGS

These instructions do not provide specific guidance on the use of tools or the lifting and moving heavy objects. It is assumed that competent people are installing this product who are familiar with using the tools and equipment required and are knowledgeable and skilled at lifting and positioning heavy objects.

PROPERTY OF EARTHSCAPE PLAY INC. - DO NOT COPY. DO NOT DISTRIBUTE.

MAKE SURE YOU HAVE ALL THE PARTS

Examine the equipment and ensure you have all the required parts listed in the table below.

PART IMAGE	ITEM NO.	PART NO.	DESCRIPTION	QTY.
SEE IMAGE THIS SHEET	1	B00089	FIRE POLE - SURFACE MOUNT	1
	2	H60020	Titen HD 1/2" x 5" Concrete Screw SS	2
	3	H16685	ASSY SK A2 8mm X 100mm SS	4

IMAGES OF FASTENERS IN THIS TABLE ARE REPRESENTATIONAL TO HELP IDENTIFY PARTS.

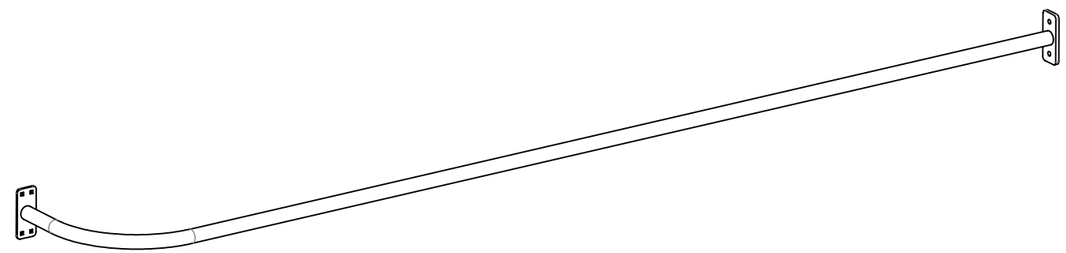

1 FIRE POLE - SURFACE MOUNT

PROPERTY OF EARTHSCAPE PLAY INC. - DO NOT COPY. DO NOT DISTRIBUTE.

FIRE POLE INSTALLATION

STEP 1 - CONFIRM WHERE THE ACCESSORY IS TO BE INSTALLED

Review the complepte tower installation package to determine on which side this accessory is to be installed and what the finished product should look like. The images shown on this page are representational and may not match your exact installation. Your installation could be a mirror image of what is shown on this sheet.

STEP 2 - LAYOUT LOCATION OF FIRE POLE

Mark the centre of the upper opening on the timber where the Fire Pole Top Plate will be secured as per Detail B

Mark the target location on the concrete pad for the centre of the Fire Pole Base Flange relative the the timber tower post base plates as shown in the Sample Elevation and Section A-A.

STEP 3 - ROUGH ALIGNMENT OF FIRE POLE

Align the top mounting plate of fire pole to the upper centre mark and temporarily hold in place.

Align the centre of the Base Flange with the mark on the concrete foundation pad and then check to ensure Fire Pole is plumb and the bottom mounting plate is resting flat on the concrete pad.

STEP 4 - ANCHOR FIRE POLE TO TOWER AND PAD

Secure the top plate to timber beam with screws as shown in Detail B. Predrill all screw holes as per manufacturer's instructions.

Secure base flange to concrete slab as noted in Sample Elevation.

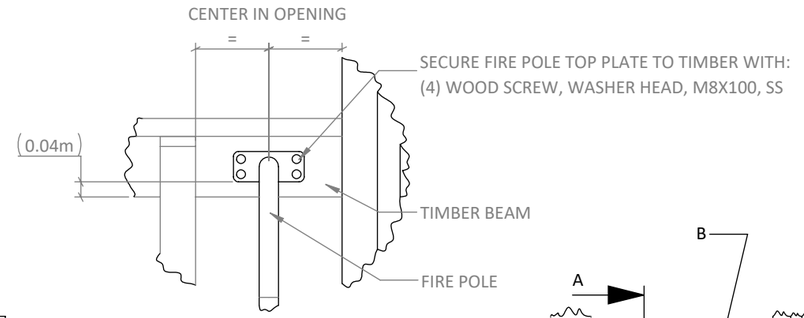

DETAIL B

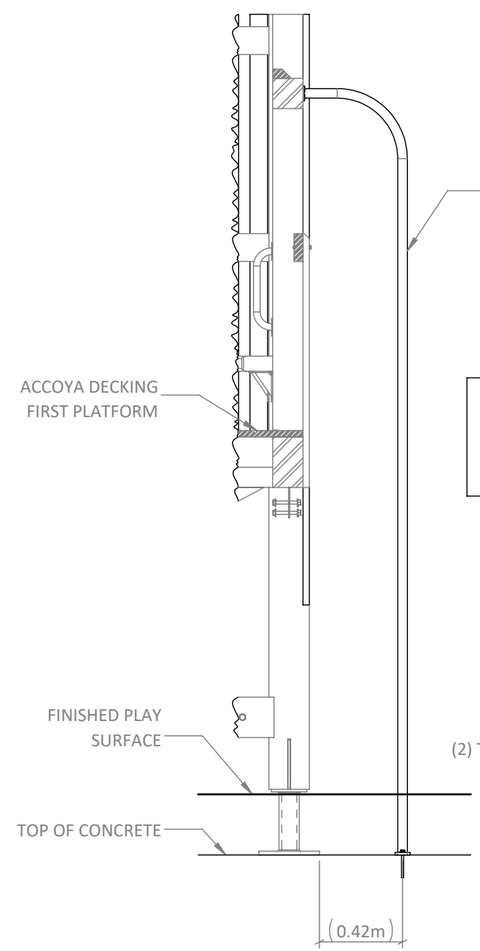

SECTION A-A

DIMENSIONS IN PARENTHESIS ARE APPROXIMATE. MINOR ADJUSTMENT MIGHT BE REQUIRED TO ENSURE FIRE POLE IS PLUMB AND BASE FLANGE RESTING ON CONCRETE PAD

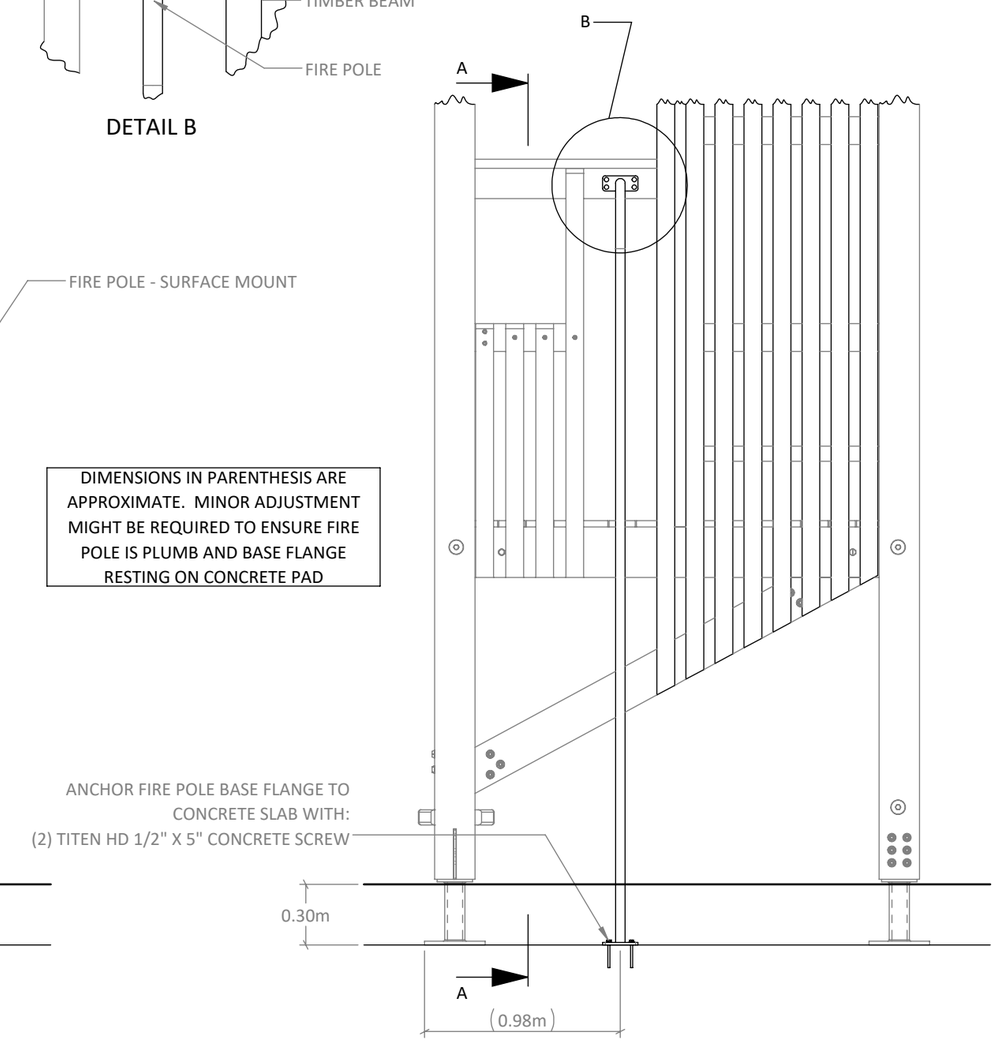

SAMPLE ELEVATION
(ACTUAL INSTALLATION MIGHT BE A MIRRORED VERSION OF THIS VIEW)

PROPERTY OF EARTHSCAPE PLAY INC. - DO NOT COPY. DO NOT DISTRIBUTE.

INSTALLATION INSTRUCTIONS

EARTHSCAPE COLLECTIONS

LICENSED PROFESSIONAL ENGINEER
M. JOHNSON
100514620
Sep 22, 2025
PROVINCE OF ONTARIO

WITZEL DYCE
ENGINEERING INC.
PROJECT NO.: 12936-165

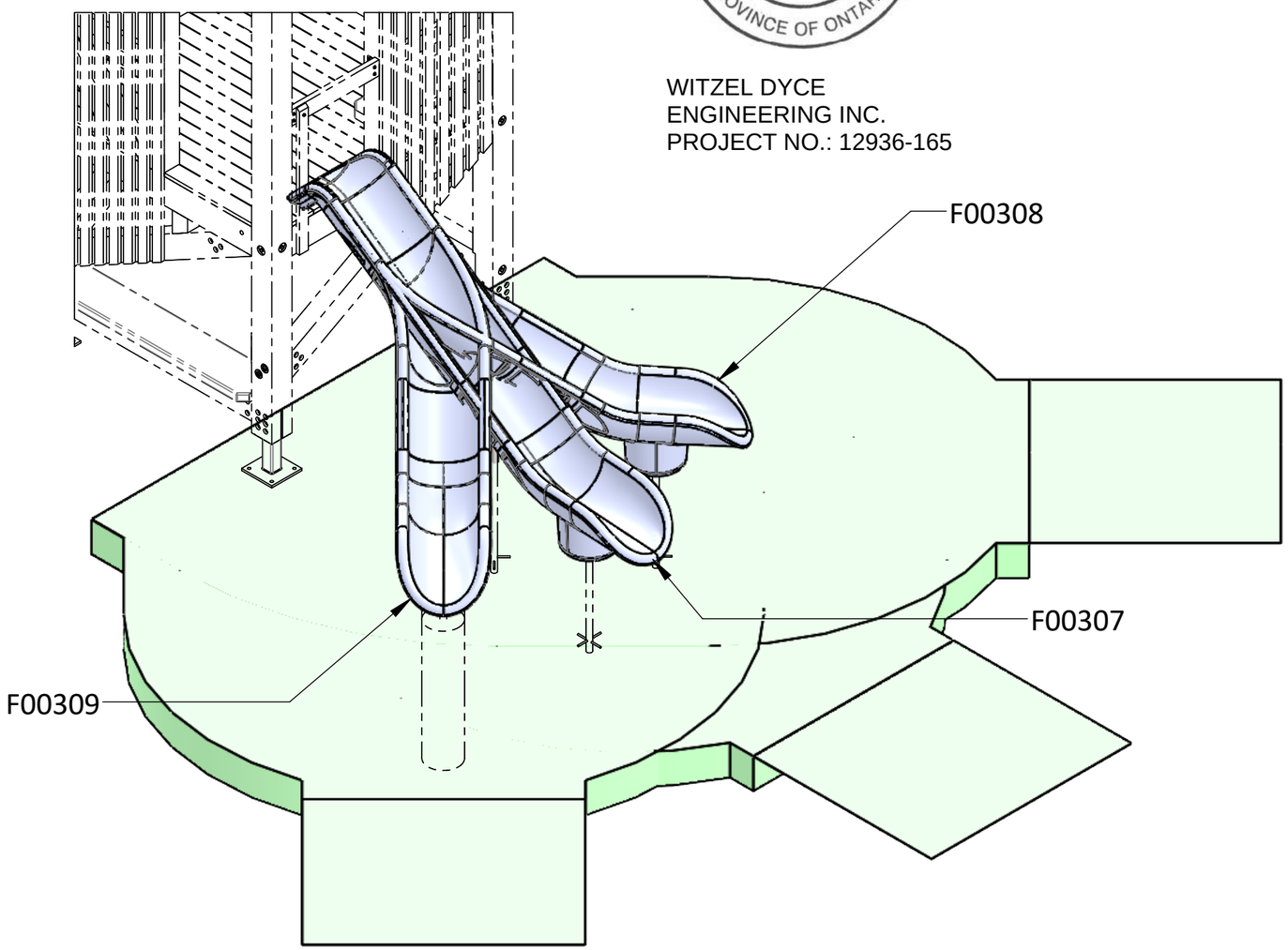

OPEN SLIDES - STARGLIDE

THESE INSTRUCTIONS APPLY TO THE FOLLOWING VERSIONS OF THIS PRODUCT:

F00307 - STARGLIDE 6' OPEN STRAIGHT SLIDE
F00308 - STARGLIDE 6' VEER LEFT SLIDE
F00309 - STARGLIDE 6' VEER RIGHT SLIDE

WHICH ARE DESIGNED TO BE INSTALLED ON THE FOLLOWING PRODUCTS:

F00182 - 2 LEVEL TIMBER TOWER
F00185 - 1 LEVEL TIMBER TOWER
F00407 - 2 LEVEL TIMBER TOWER
F00408 - 3 LEVEL TIMBER TOWER

NOTE: COLOURS SHOWN ARE REPRESENTATIONAL AND MAY NOT BE THE SAME AS THOSE OF THE SUPPLIED PRODUCT

FOR CSA AND ASTM SPECIFICATIONS AND GENERAL NOTES SEE MAIN STRUCTURE INSTALLATION PACKAGE

DATE DOCUMENT RELEASED 2021-09-06
DOCUMENT NUMBER: 1051525-R4

PROPERTY OF EARTHSCAPE PLAY INC. - DO NOT COPY. DO NOT DISTRIBUTE.

PLEASE READ ALL INSTRUCTIONS

Before starting to install this equipment be sure to read through and understand these instructions.

If you have any questions, contact your local dealer for assistance before proceeding.

MEASUREMENTS AND STANDARDS

Measurements have been provided in both metres and [feet-inches]. Ensure to follow standards noted for the location in which this play equipment is being installed. Those marked CSA are to be used in Canada and those marked ASTM to be used in the United States.

LIST OF ABBREVIATIONS

AYC = Alaskan Yellow Cedar
WRC = Western Red Cedar
DPS = Designated Play Surface
SS = Stainless Steel
HDG = Hot Dipped Galvanized
WWM = Welded Wire Mesh
TYP = Typical
C/W = Complete With
UNO = Unless Noted Otherwise
EWF = Engineered Wood Fiber
PIP = Poured-In-Place Rubber Surfacing
PT = Pressure Treated

TOOLS SUPPLIED WITH THIS PRODUCT

- No tools supplied

TOOLS THE INSTALLER NEEDS TO SUPPLY

- High torque drill
  - recommend right angle or flexible drive
- Set of wood drill bits - up to 1/2"
- 1/2" impact driver
- Set of impact sockets - up to 1"
- 1/2" ratcheting socket wrench
- Set of imperial hex keys - up to 1/4"
- T25 drive bit
- T40 drive bit
- Transit or Laser Level
- Rigging and lifting straps

EQUIPMENT THE INSTALLER NEEDS TO SUPPLY

Machine to aid in lifting and positioning the slide.

- Site assembled Starglide plastic slide +/- 80 kg [180 lbs]

INSTALLER CREW AND TIME REQUIRED

Number of people needed: 2
Typical total person-hours to install: 5 + concrete cure time
Time breakdown:

- 1 hour x 2 people for excavation and pouring concrete
- 1 hour x 2 people for onsite fabrication and play equipment installation
- Time for concrete cure
- 1 hour x 1 person to remove bracing and install string probe kit

MATERIALS THE INSTALLER NEEDS TO SUPPLY

- Concrete

WARNINGS

These instructions do not provide specific guidance on the use of tools or the lifting and moving heavy objects. It is assumed that competent people are installing this product who are familiar with using the tools and equipment required and are knowledgeable and skilled at lifting and positioning heavy objects.

PROPERTY OF EARTHSCAPE PLAY INC. - DO NOT COPY. DO NOT DISTRIBUTE.

MAKE SURE YOU HAVE ALL THE PARTS

Examine the equipment and ensure you have all the required parts listed in the tables below.

PART IMAGE	ITEM NO.	PART NO.	DESCRIPTION	QTY.
SEE STANDARD DETAIL SD-035A AT PACK OF THIS PACKAGE	1	B00002	STRING PROBE KIT 135°	1
SEE IMAGE THIS SHEET	2	B00047	BRACKET SLIDE FOOTBUCK	1
SEE IMAGE THIS SHEET	3	B00056-70	SPI SLIDE SUPPORT POST - 70"	1
	4	H16674	ASSY SK A2 8mm X 80mm SS	3
ONE OF THE FOLLOWING SLIDES WILL BE SUPPLIED AS PER THE PRODUCT NUMBER ORDERED				
SEE IMAGE THIS SHEET	5A	SL0010	6' STARGLIDE SLIDE STRAIGHT (F00307)	1
SEE IMAGE THIS SHEET	5B	SL0018	6' STARGLIDE SLIDE VEER LEFT (F00308)	1
SEE IMAGE THIS SHEET	5C	SL0019	6' STARGLIDE SLIDE VEER RIGHT (F00309)	1

IMAGES OF FASTENERS IN THIS TABLE ARE REPRESENTATIONAL AND ARE PROVIDED TO HELP IDENTIFY PARTS.

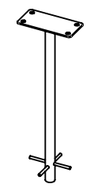

2 BRACKET SLIDE FOOTBUCK

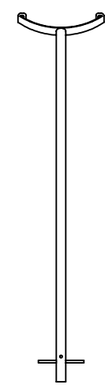

3 SPI SLIDE SUPPORT POST - 70"

5A

6' STARGLIDE SLIDE - STRAIGHT
(FOR PRODUCT F00307)
DOES NOT COME ASSEMBLED

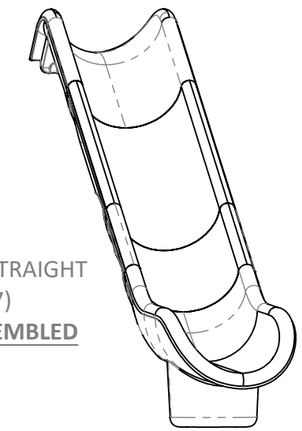

OR

5B

6' STARGLIDE SLIDE - VEER LEFT
(FOR PRODUCT F00308)
DOES NOT COME ASSEMBLED

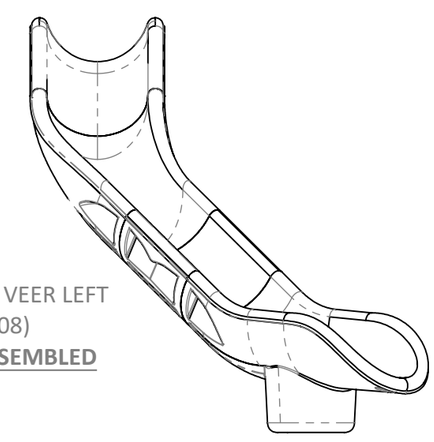

OR

5C

6' STARGLIDE SLIDE - VEER RIGHT
(FOR PRODUCT F00309)
DOES NOT COME ASSEMBLED

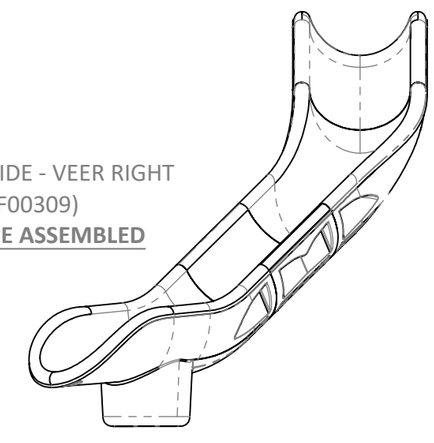

PROPERTY OF EARTHSCAPE PLAY INC. - DO NOT COPY. DO NOT DISTRIBUTE.

POSITION SLIDE

OPEN SLIDES - STARGLIDE

STEP 1 - CONFIRM WHERE THE ACCESSORY IS TO BE INSTALLED

Review the complete tower installation package and determine which side the slide is to be installed and what the finished product should look like. The images shown on this page are representational and may not match your exact installation. Your installation could be a mirror image of what is shown on this sheet and the shape of the slide could differ depending on the product number ordered.

STEP 2 - ASSEMBLE THE SLIDE AND SUPPORT POSTS

The plastic parts of the slide will arrive in pieces. Assemble using manufacturer's supplied hardware and instructions.
Secure the Middle Support Post to the slide (SPI Slide Support Post - 70") as per detail SD-007 at the back of this package
Secure the Slide Base Bracket (Bracket Slide Footbuck) to the slide as per detail SD-006 at the back of this package.

STEP 3 - POSITION SLIDE

With the slide fully assembled, position the top of the slide in the prefabricated notch in the tower. Centre in the opening as per Detail A this sheet.

Position the 2 support posts in the pre-augered holes (**as per complete tower installation package**).

Temporarily brace the slide to ensure the exit of the slide meets the target ***exit height*** above the finished play surface as per the Sample Side Elevation (this sheet) and detail SD-006 at the back of this package.

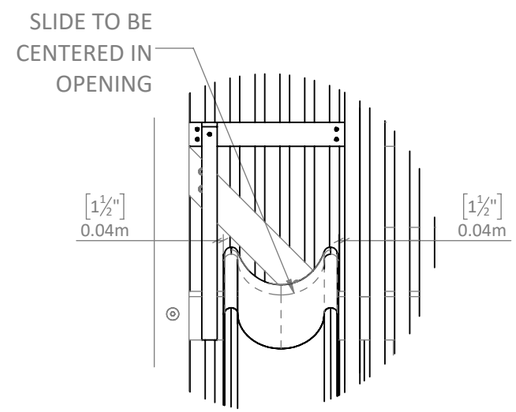

DETAIL A

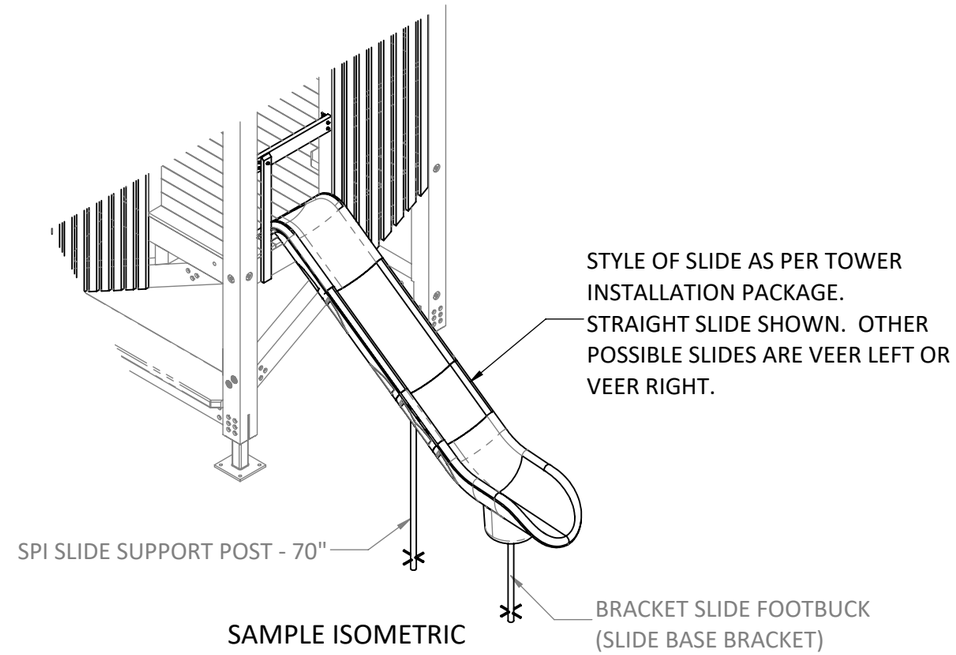

SAMPLE ISOMETRIC

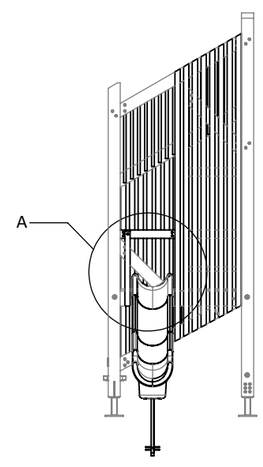

SAMPLE FRONT ELEVATION

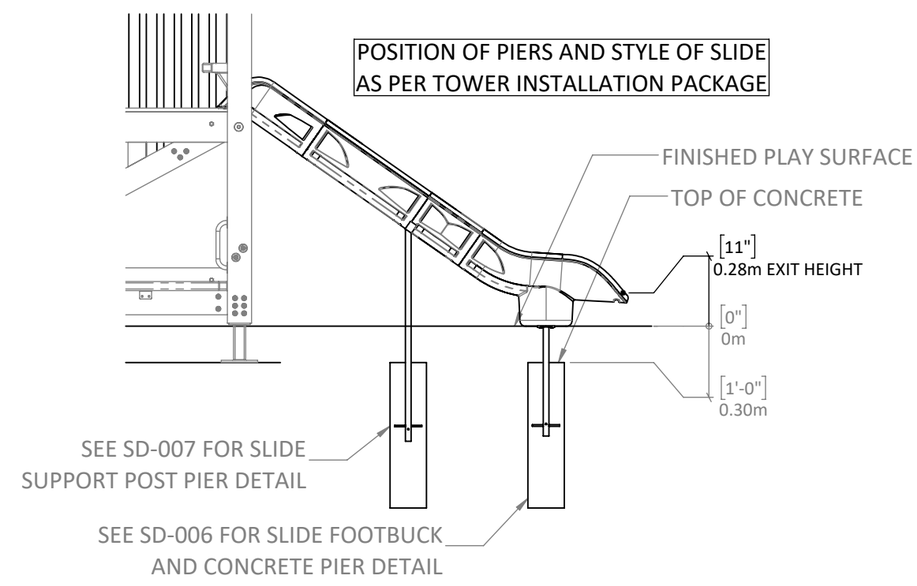

SAMPLE SIDE ELEVATION

PROPERTY OF EARTHSCAPE PLAY INC. - DO NOT COPY. DO NOT DISTRIBUTE.

STEP 4 - SECURE TOP OF SLIDE TO TOWER

Predrill and install the screws at the top of the slide as per Detail B this sheet

STEP 5 - POUR CONCRETE PIERS

Pour concrete piers as per details SD-006 and SD-007 at back of this package. Allow concrete to cure prior to proceeding to step 6.

STEP 6 - REMOVE BRACING

Once concrete piers have cured, remove temporary slide bracing.

STEP 7 - INSTALL STRING PROBE KIT

Install the string probe kit at the top of the slide as per detail SD-035A at the back of this package.

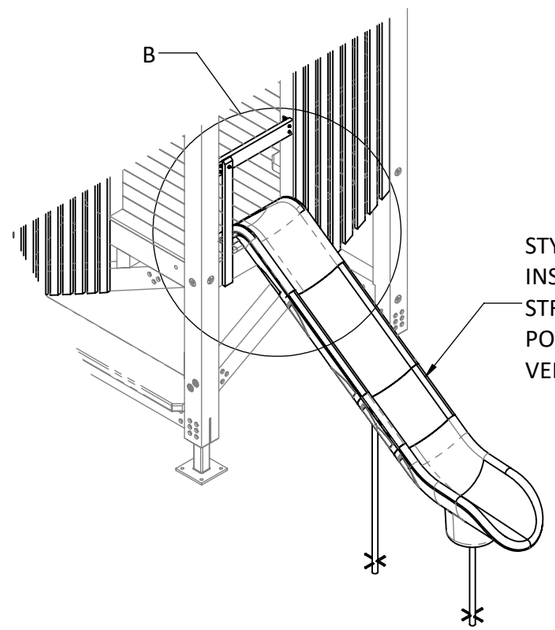

SAMPLE ISOMETRIC

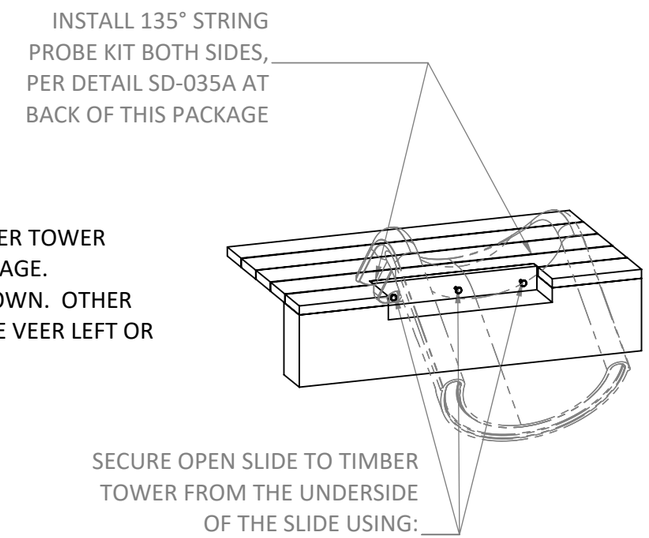

DETAIL B

PROPERTY OF EARTHSCAPE PLAY INC. - DO NOT COPY. DO NOT DISTRIBUTE.

SD-006

OPEN SLIDES - STARGLIDE

NOTES:

1. THIS CONNECTION DETAIL IS ONLY INTENDED TO SHOW AN ISOLATED SECTION. REFER TO THE APPROPRIATE DETAILS AS NOTED IN THE CONSTRUCTION DRAWINGS FOR ALL OTHER INFORMATION
2. IF SLIDE HEIGHT IS LESS THAN 1.2m [47.2"], EXIT HEIGHT MUST BE FROM 0-275mm [0-10.8"] ABOVE GRADE
3. IF SLIDE HEIGHT IS MORE THAN 1.2M [47.2"], EXIT HEIGHT MUST BE BETWEEN 175-380mm [6.9-15"] ABOVE GRADE
4. SLIDE EXIT HEIGHT TO BE SPECIFICALLY NOTED IN PROJECT INSTALLATION DRAWING

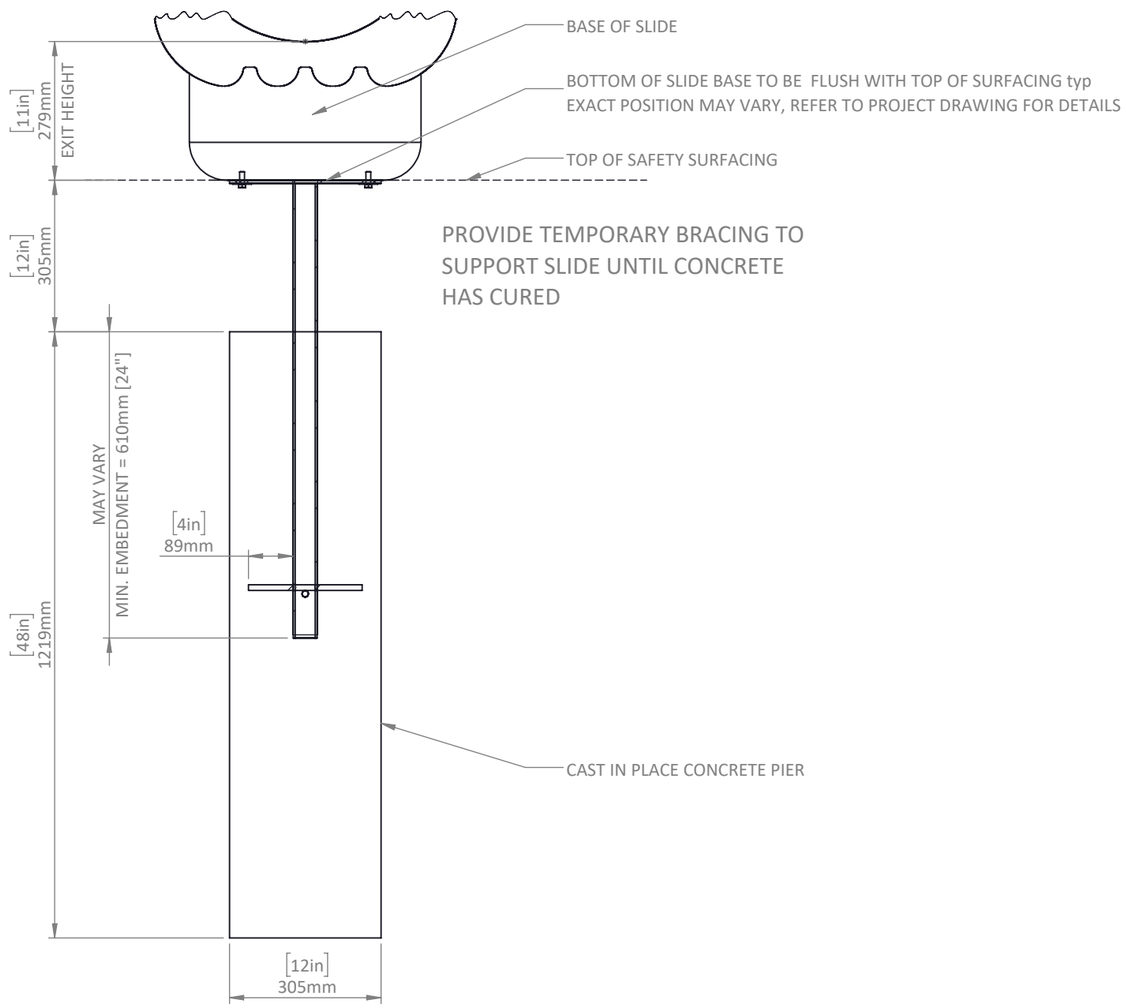

HARDWARE REFERENCE LIST

ITEM NO.	PartNo	DESCRIPTION	QTY.
1	B00047	Bracket Slide Footbuck	1
2	H30052	Washer 3/8" x 1-1/2" SS Fender	4
3	H10244	Hex Cap Screw 3/8-16 x 1 SS full thread	4

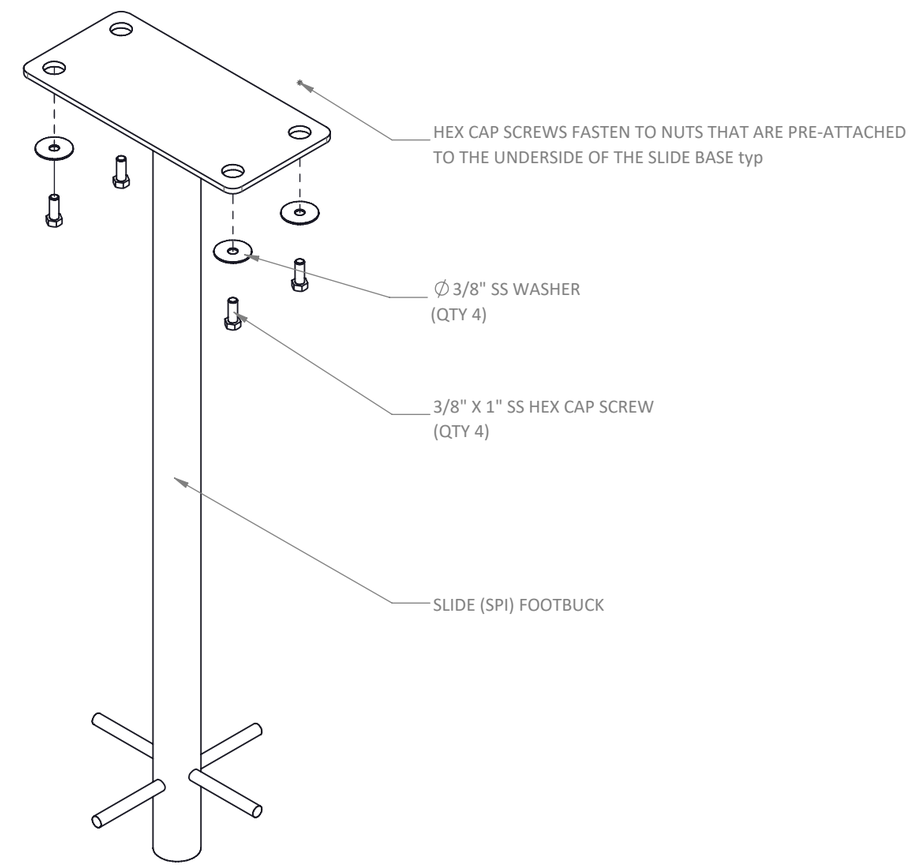

SLIDE (SPI) BASE BRACKET INSTALLATION

PROPERTY OF EARTHSCAPE PLAY INC. - DO NOT COPY. DO NOT DISTRIBUTE.

SD-007

OPEN SLIDES - STARGLIDE

IF REQUIRED, SLIDE POSTS TO BE CUT TO LENGTH ON SITE BY CONTRACTOR ONCE GRADE HAS BEEN ESTABLISHED
IF SLIDE HEIGHT IS LESS THAN 1.2m [47.2"], EXIT HEIGHT MUST BE FROM 0-275mm [0-10.8"] ABOVE GRADE
IF SLIDE HEIGHT IS MORE THAN 1.2M [47.2"], EXIT HEIGHT MUST BE BETWEEN 175-380mm [6.9-15"] ABOVE GRADE

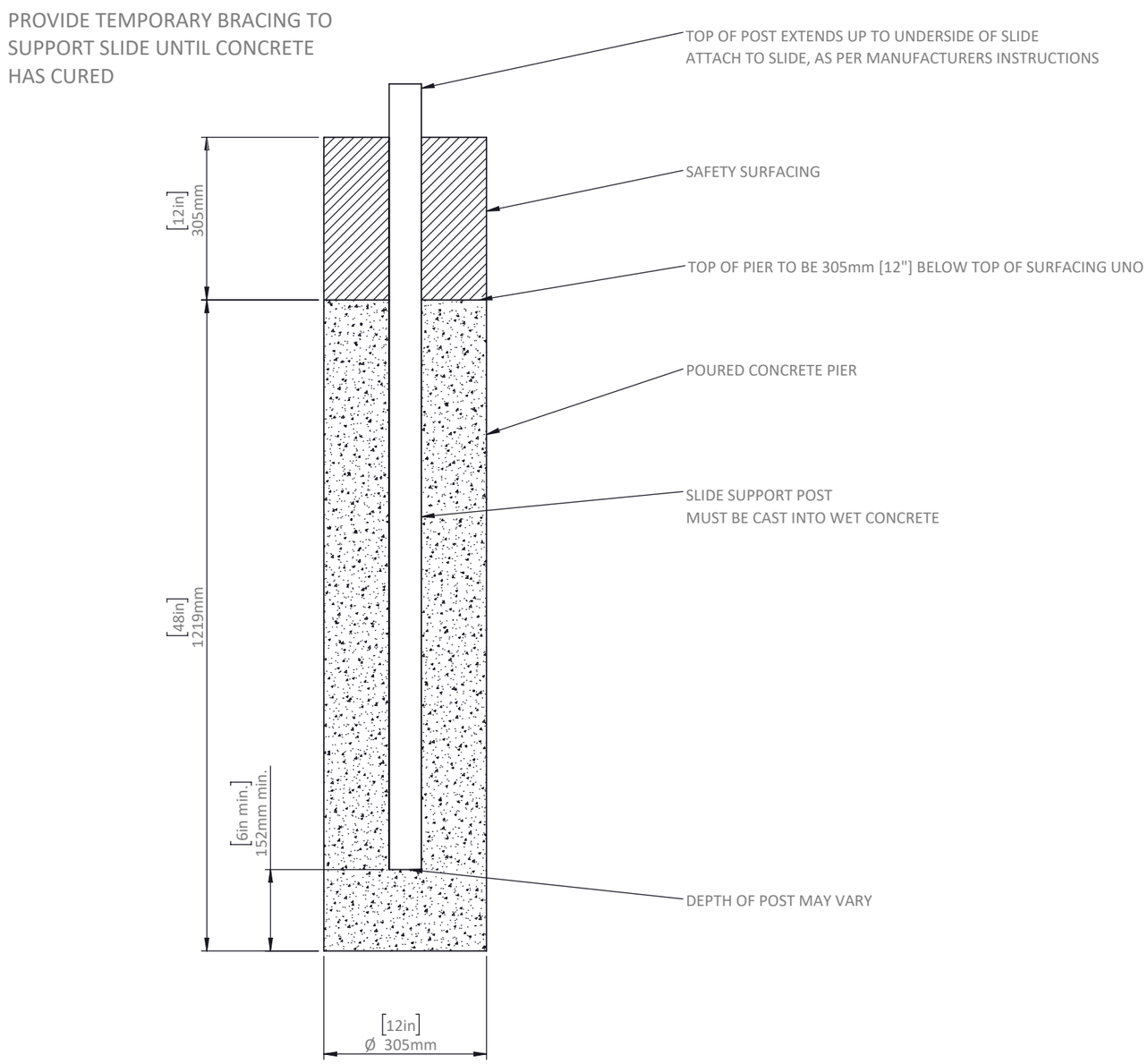

SLIDE SUPORT POST PIER INSTALLATION

PROPERTY OF EARTHSCAPE PLAY INC. - DO NOT COPY. DO NOT DISTRIBUTE.

SD-035A

OPEN SLIDES - STARGLIDE

NOTES:

1. REFER TO "GENERAL NOTES" SHEET FOR ALL GENERAL NOTES
2. THIS CONNECTION DETAIL IS ONLY INTENDED TO SHOW AN ISOLATED SECTION. REFER TO THE APPROPRIATE DETAILS AS NOTED IN THE INSTALLATION PACKAGE FOR ALL OTHER INFORMATION

B00002 KIT BOM			
ITEM NO.	PartNo	DESCRIPTION	QTY.
1	B00017	Bracket Slide String Probe 135°	2
2	H13225	Button Socket Head Cap Screw 3/8-16 x 1 SS	2
3	H16685	ASSY SK A2 8mm x 100mm SS	2
4	H30053	Washer 3/8" x 7/8" SS	2
5	H40071	Flat Rivet Nut 3/8"-16 SS	2
ITEMS BELOW ARE NOT SHOWN IN THIS DETAIL. THEY ARE USED FOR MOUNTING THE SLIDE BASE BRACKET. SEE SD-006 FOR MORE INFORMATION.			
6	H10244	Hex Cap Screw 3/8-16 x 1 SS full thread	4
7	H30052	Washer 3/8" x 1-1/2" SS Fender	4

*ONLY USE ONE KIT PER SLIDE

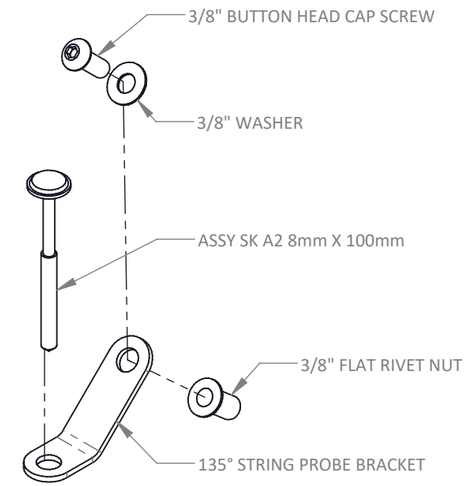

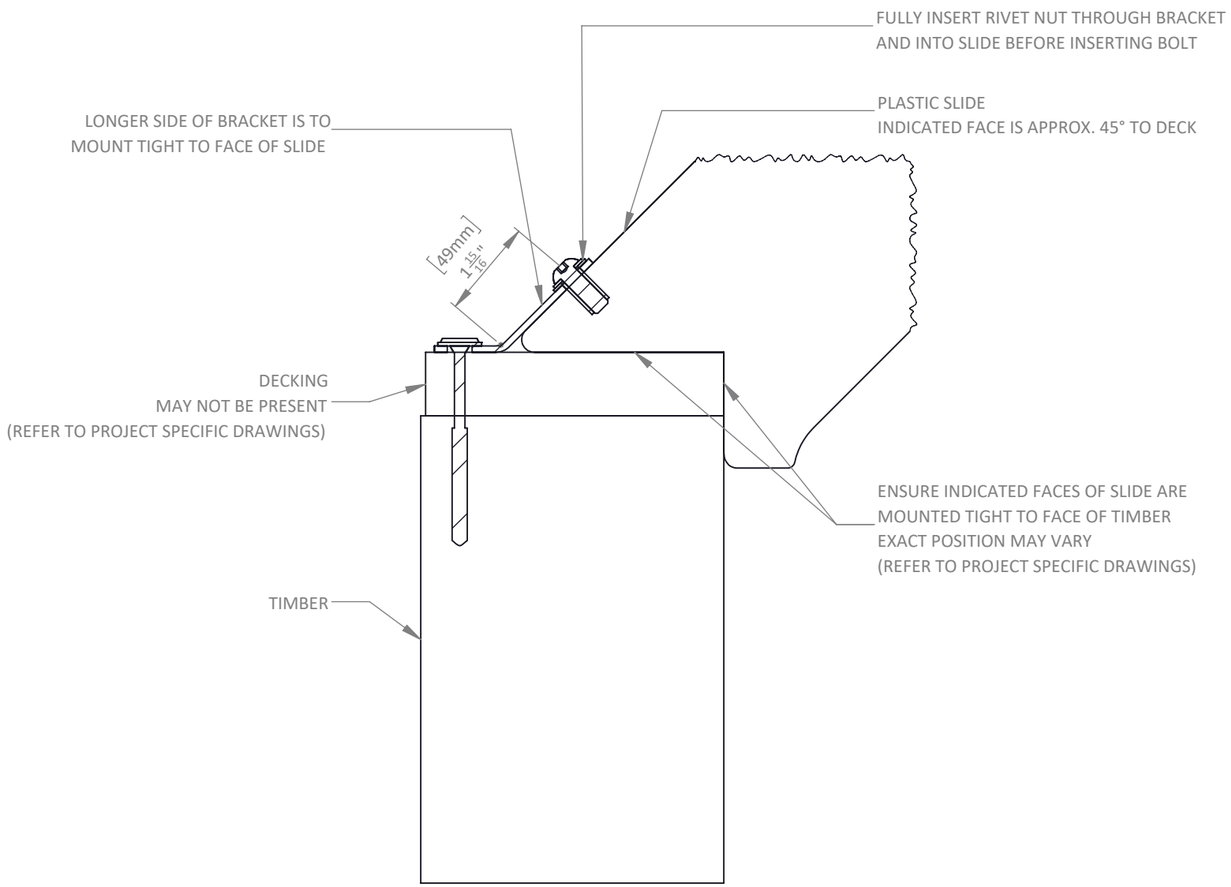

DETAIL A

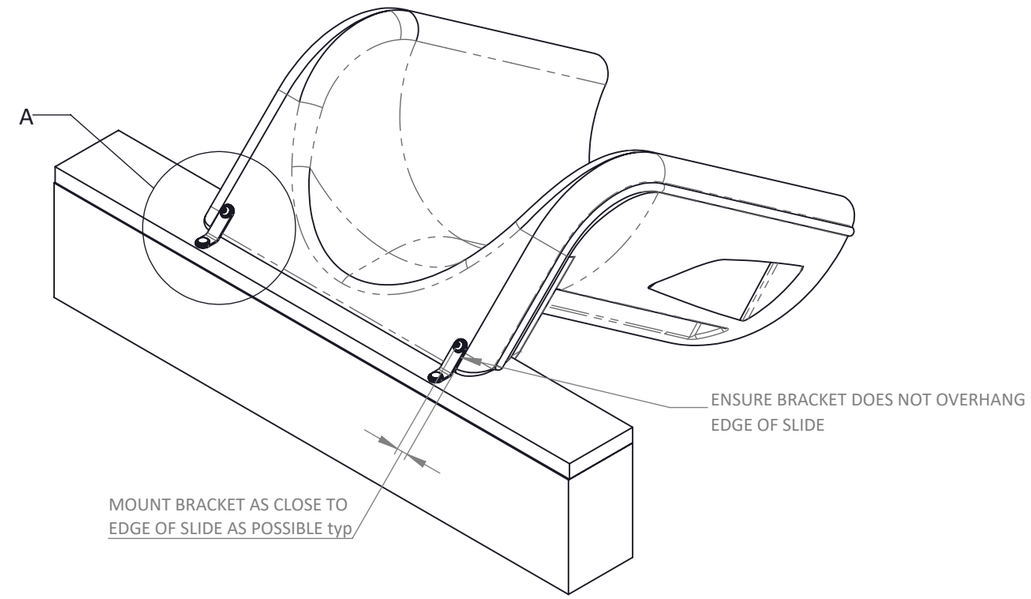

135° STRING PROBE BRACKET INSTALLATION

DATE DOCUMENT RELEASED 2021-09-06
DOCUMENT NUMBER: 1051525 - R4

PROPERTY OF EARTHSCAPE PLAY INC. - DO NOT COPY. DO NOT DISTRIBUTE.

INSTALLATION INSTRUCTIONS

EARTHSCAPE COLLECTIONS

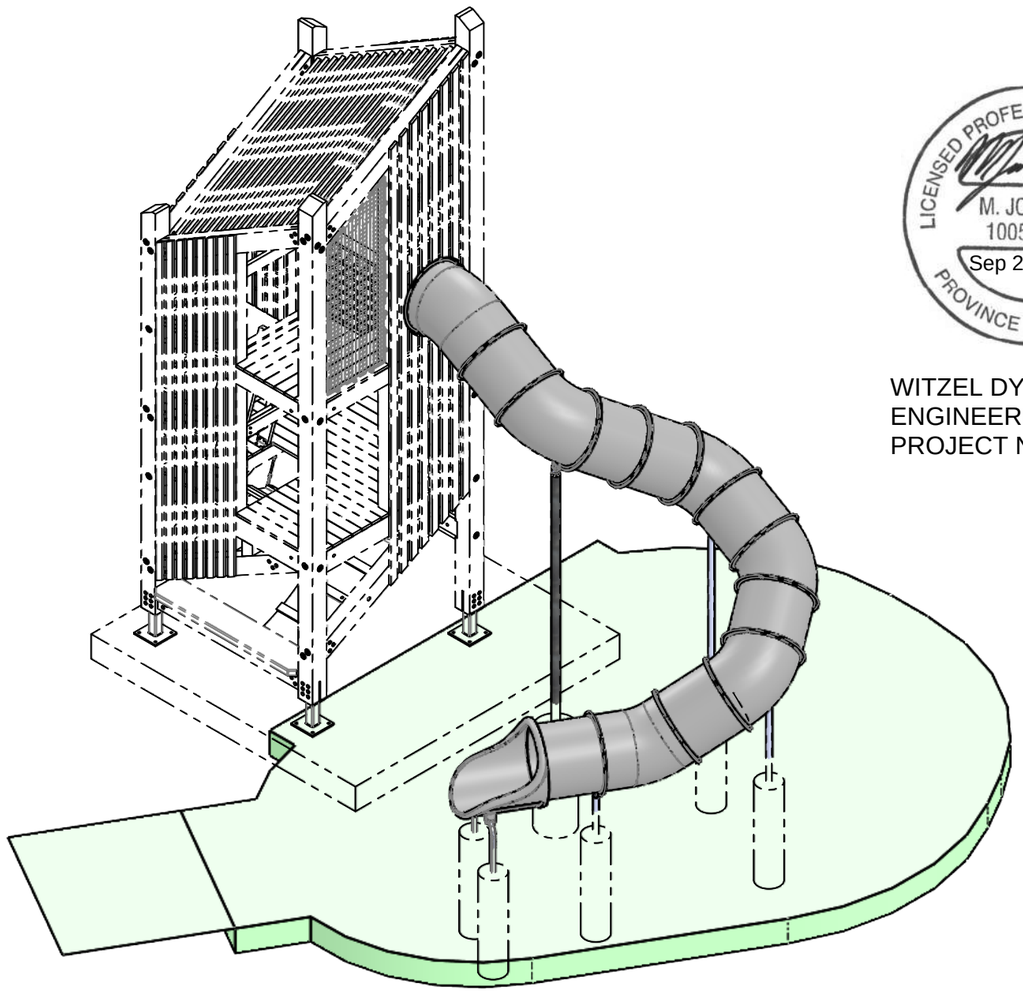

LICENSED PROFESSIONAL ENGINEER
M. JOHNSON
100514620
Sep 22, 2025
PROVINCE OF ONTARIO

WITZEL DYCE
ENGINEERING INC.
PROJECT NO.: 12936-165

PLASTIC TUBE SLIDE - FLANGE - 12' - TURN RIGHT

THESE INSTRUCTIONS APPLY TO THE FOLLOWING VERSIONS OF THIS PRODUCT:

F00316 - PLASTIC TUBE SLIDE - FLANGE - 12' - TURN RIGHT

WHICH IS DESIGNED TO BE INSTALLED ON THE FOLLOWING PRODUCTS:

F00407 - 2 LEVEL TIMBER TOWER
F00408 - 3 LEVEL TIMBER TOWER

NOTE: COLOURS SHOWN ARE REPRESENTATIONAL AND MAY NOT BE THE SAME AS THOSE OF THE SUPPLIED PRODUCT

FOR CSA AND ASTM SPECIFICATIONS AND GENERAL NOTES, SEE MAIN STRUCTURE INSTALLATION PACKAGE.

DATE DOCUMENT RELEASED 2022-11-09
DOCUMENT NUMBER: 1074101-R2

PROPERTY OF EARTHSCAPE PLAY INC. - DO NOT COPY. DO NOT DISTRIBUTE.

PLEASE READ ALL INSTRUCTIONS

Before starting to install this equipment be sure to read through and understand these instructions.

If you have any questions, contact your local dealer for assistance before proceeding.

MEASUREMENTS AND STANDARDS

Measurements have been provided in both metres and [feet-inches]. Ensure to follow standards noted for the location in which this play equipment is being installed. Those marked CSA are to be used in Canada and those marked ASTM to be used in the United States.

LIST OF ABBREVIATIONS

AYC = Alaskan Yellow Cedar
WRC = Western Red Cedar
DPS = Designated Play Surface
SS = Stainless Steel
HDG = Hot Dipped Galvanized
WWM = Welded Wire Mesh
TYP = Typical
C/W = Complete With
UNO = Unless Noted Otherwise
EWF = Engineered Wood Fiber
PIP = Poured-In-Place Rubber Surfacing
PT = Pressure Treated

TOOLS SUPPLIED WITH THIS PRODUCT

- T00047 - Tri Groove Drive (Fits 5/16", 3/8", 8mm AND 10mm)

TOOLS THE INSTALLER NEEDS TO SUPPLY

- High torque drill
- 1/2" impact driver
- Set of impact sockets - up to 1"
- 1/2" ratcheting socket wrench
- Set of hex keys
- Set of wood drill bits - up to 1/2"
- T25 drive bit
- T40 drive bit
- Angle grinder (with course 24 grit sanding disks and metal cut off disks)
- Transit or Laser Level
- Rigging and lifting straps

EQUIPMENT THE INSTALLER NEEDS TO SUPPLY

Machine to lift and position heaviest element.

- Site assembled slide +/- 250 kg [560 lbs]

Machine or scaffolding to allow installers to work safely at heights.

INSTALLER CREW AND TIME REQUIRED

Number of people needed: 2
Typical total person-hours to install: 24 + concrete cure time

Time breakdown:

- 2 hours x 2 people for excavation
- 7 hours x 2 people for onsite fabrication and play equipment installation
- 2 hours x 2 people for pouring concrete
- Time for concrete cure
- 1 hours x 2 people for temporary brace removal

MATERIALS THE INSTALLER NEEDS TO SUPPLY

- Threadmate threadlocker Vibra-Tite VC-3 (or equal)
- Concrete

WARNINGS

These instructions do not provide specific guidance on the use of tools or the lifting and moving heavy objects. It is assumed that competent people are installing this product who are familiar with using the tools and equipment required and are knowledgeable and skilled at lifting and positioning heavy objects.

PROPERTY OF EARTHSCAPE PLAY INC. - DO NOT COPY. DO NOT DISTRIBUTE.

SUPPLIED PARTS

PLASTIC TUBE SLIDE - FLANGE - 12' - TURN RIGHT

MAKE SURE YOU HAVE ALL THE PARTS

Examine the equipment and ensure you have all the required parts listed in the table below.

PART IMAGE	ITEM NO.	PART NO.	DESCRIPTION	QTY.
	1	H13224	BUTTON SOCKET HEAD CAP SCREW 3/8-16 X 7/8 SS	13
	2	H30053	WASHER 3/8" X 7/8" SS	13
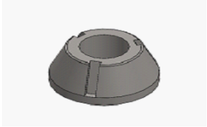	3	H40032	TRI-GROOVE NUT 3/8"-16	13
NO IMAGE PROVIDED	4	T00047	TRI GROOVE DRIVE (FITS 5/16", 3/8", 8mm AND 10mm)	1
SEE IMAGE THIS SHEET	5	SL0030	PLASTIC TUBE SLIDE - FLANGE - 12' - TURN RIGHT	1

IMAGES OF FASTENERS IN THIS TABLE ARE REPRESENTATIONAL TO HELP IDENTIFY PARTS.

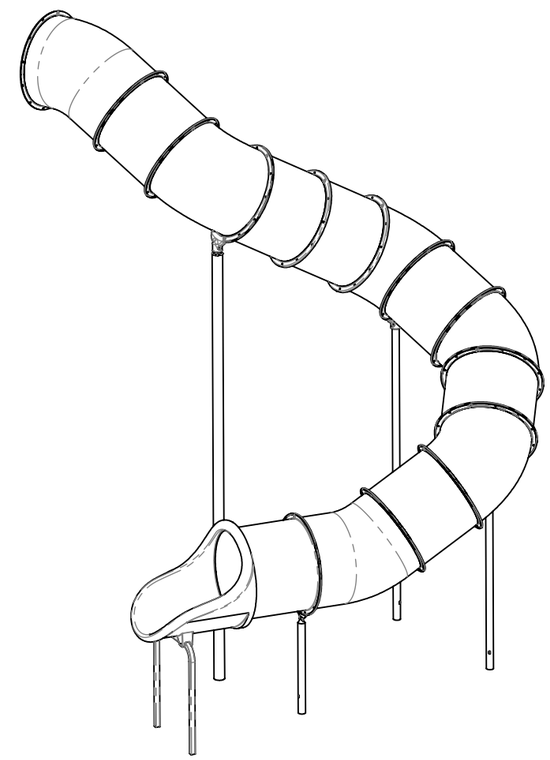

SL0030 - PLASTIC TUBE SLIDE - FLANGE - 12' - TURN RIGHT

(DOES NOT SHIP PRE-ASSEMBLED)

PROPERTY OF EARTHSCAPE PLAY INC. - DO NOT COPY. DO NOT DISTRIBUTE.

FINISHED PRODUCT

PLASTIC TUBE SLIDE - FLANGE - 12' - TURN RIGHT

WHAT THE FINISHED PRODUCT LOOKS LIKE

Finished play surface and concrete foundations by Installer.

The foundation design shown here might be different than what is shown in the main tower installation package. If any differences are noted, the main installation package shall take precedent over the details shown here.

The foundation detail provided in these instructions has been developed assuming typical soil conditions specified in general notes. If the subgrade encountered does not meet these conditions, the subgrade must be improved or revisions made to this detail. Revisions to the detail are the responsibility of the Installer and it is strongly recommended any changes be reviewed and approved by a registered engineer.

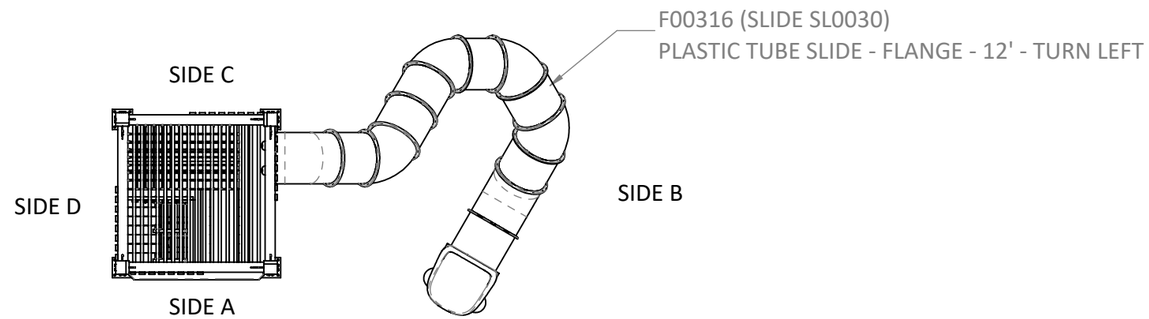

PLAN VIEW

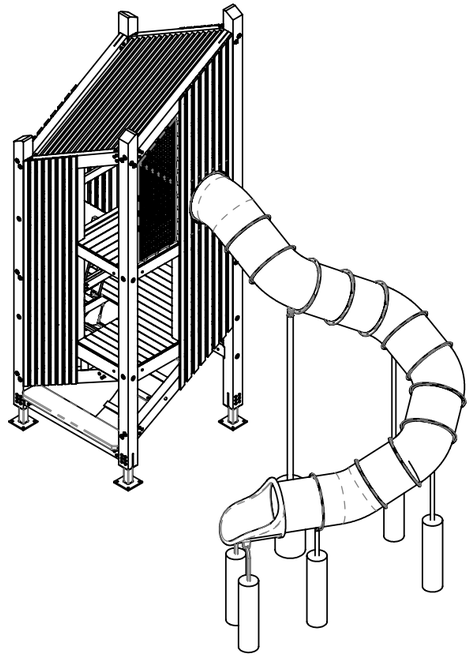

ISOMETRIC VIEW

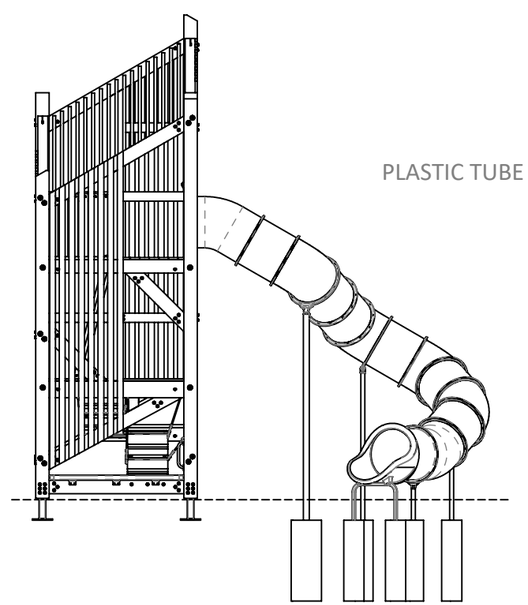

SIDE A ELEVATION

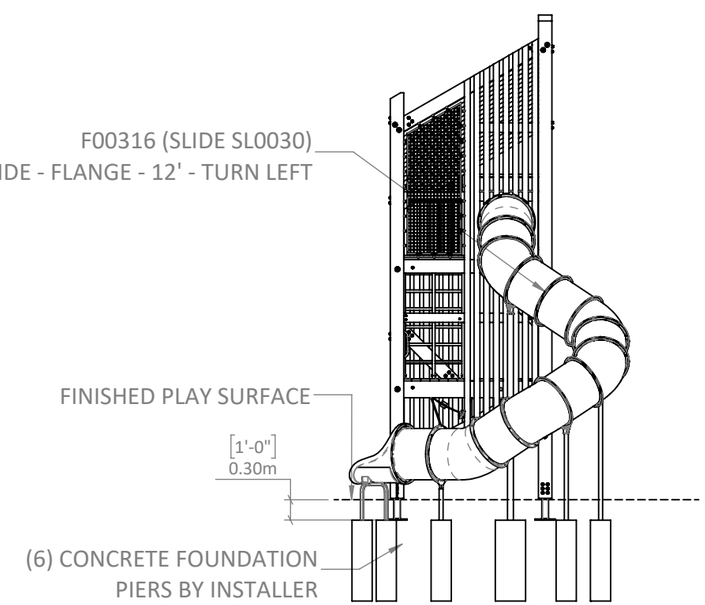

SIDE B ELEVATION

PROPERTY OF EARTHSCAPE PLAY INC. - DO NOT COPY. DO NOT DISTRIBUTE.

LOCATE PLAY EQUIPMENT

PLASTIC TUBE SLIDE - FLANGE - 12' - TURN RIGHT

STEP 1 - LOCATING THE EQUIPMENT ON SITE

Review the complete tower installation package to determine what the finished product should look like. The images shown in this package are representational and may not match your exact installation.

Ensure you know what the designed elevation is for the finished safety surface. All heights provided in these instructions will be relative to the finished play surface. The finished surface elevation is not within the scope of these instructions and should be provided by others.

THESE INSTRUCTIONS ARE BASED ON A STANDARD WHICH ASSUMES A LEVEL PLAYING SURFACE THAT IS 305mm (12") DEEP.

STEP 2 - LAYOUT SLIDE PIERS

Layout the centre of all slide piers using the pier layout plan and the pier location table this sheet. Use the corners of the tower post base brackets noted as reference points in the complete tower installation package.

STEP 3 - AUGER HOLES

Auger all slide pier holes as per Typical Augered Pier detail this sheet as per the diameter noted in Pier Layout Table this sheet. Note depth of augured hole provided from the standard **finished play surface grade**. Finished grades are not within the scope of these instructions and should be provided by others.

SLIDE SUPPORT POSTS TO BE CAST IN PLACE DURING INSTALLATION.

DO NOT POUR CONCRETE YET.

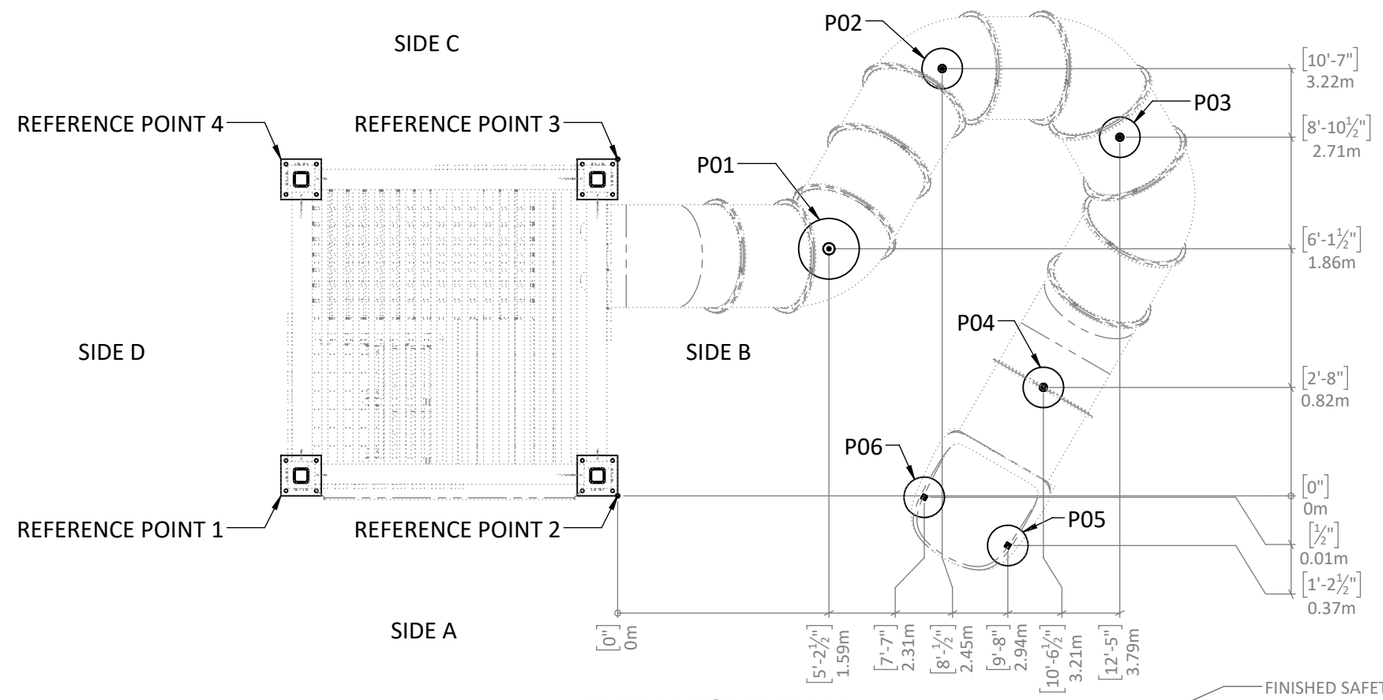

PIER LAYOUT PLAN

PIER LAYOUT TABLE			
PIER I.D.	RAY FROM REF. POINT 2	RAY FROM REF. POINT 3	PIER DIAMETER
P01	[8'-½"] 2.45m	[5'-8"] 1.73m	[1'-6"] ∅0.46m
P02	[13'-3½"] 4.05m	[8'-4"] 2.54m	[1'-0"] ∅0.30m
P03	[15'-3"] 4.65m	[12'-5½"] 3.79m	[1'-0"] ∅0.30m
P04	[10'-10½"] 3.31m	[11'-11½"] 3.64m	[1'-0"] ∅0.30m
P05	[9'-9"] 2.97m	[13'-7"] 4.14m	[1'-0"] ∅0.30m
P06	[7'-7"] 2.31m	[11'-3½"] 3.44m	[1'-0"] ∅0.30m

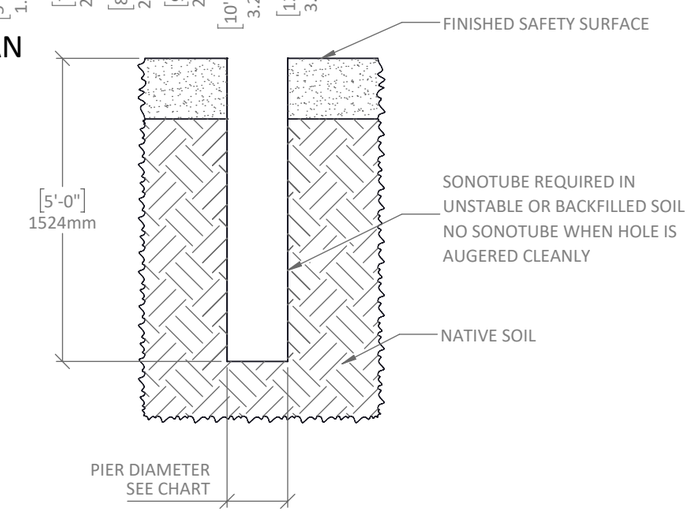

TYPICAL AUGERED PIER

PROPERTY OF EARTHSCAPE PLAY INC. - DO NOT COPY. DO NOT DISTRIBUTE.

SLIDE ENTRANCE

PLASTIC TUBE SLIDE - FLANGE - 12' - TURN RIGHT

STEP 4 - PREP TOWER FOR TUBE SLIDE INSTALL

Temporarily remove tread from wooden step from inside of tower at entrance to slide as shown in Inside View. Save screws

STEP 5 - INSTALL TUBE SLIDE ENTRANCE SECTION

Position the slide entrance section as shown in Slide Entrance Section View and Slide Entrance Elevation View this sheet.

Secure the tube slide entrance section to the steel panel already mounted on the timber tower as per Detail B.

Reinstall tread for wooden step inside the tower.

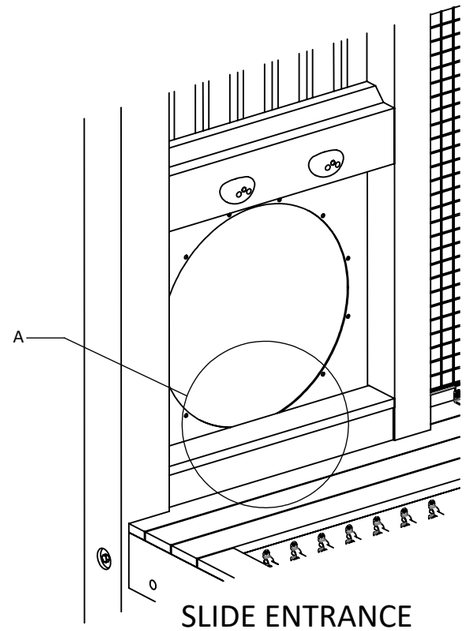

SLIDE ENTRANCE
INSIDE VIEW

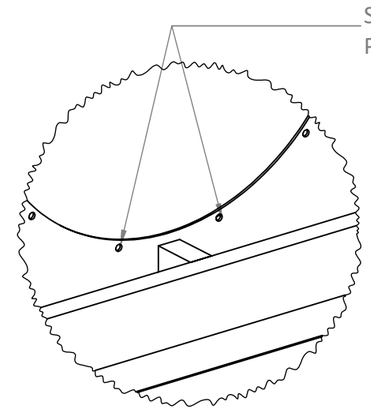

DETAIL A

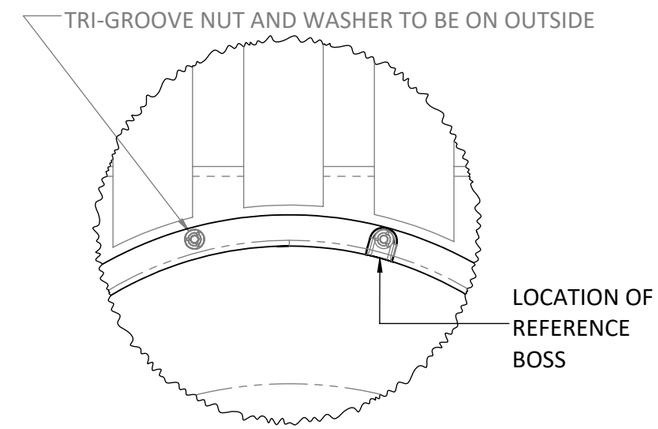

DETAIL B

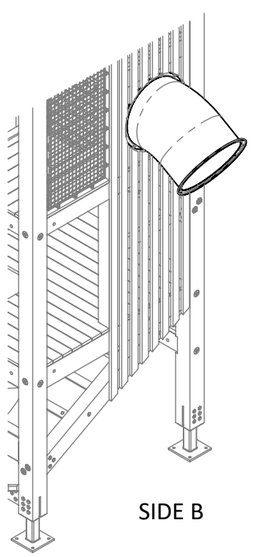

ISOMETRIC VIEW

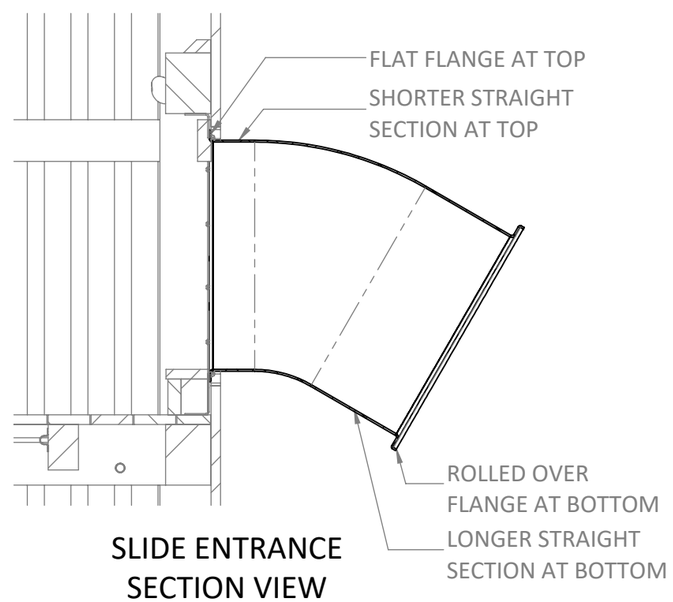

SLIDE ENTRANCE
SECTION VIEW

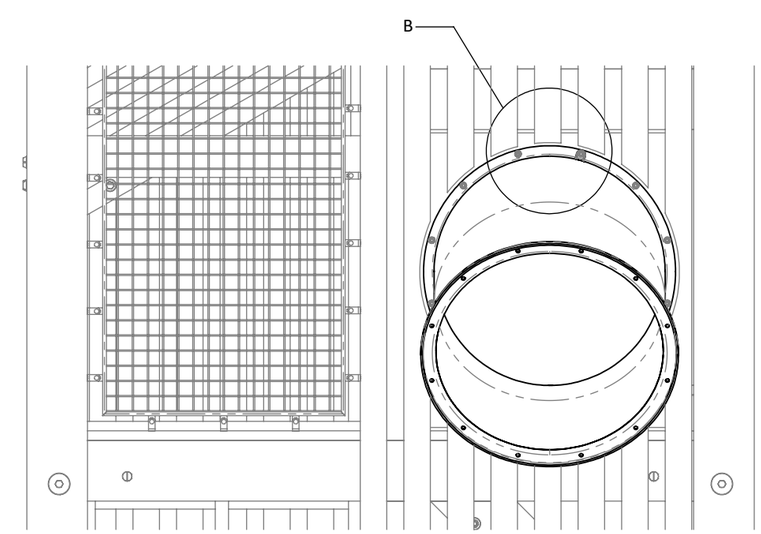

SLIDE ENTRANCE
ELEVATION VIEW

PROPERTY OF EARTHSCAPE PLAY INC. - DO NOT COPY. DO NOT DISTRIBUTE.

ASSEMBLE SLIDE

PLASTIC TUBE SLIDE - FLANGE - 12' - TURN RIGHT

STEP 6 - ASSEMBLE REMAINDER OF TUBE SLIDE

Complete the assembly and installation of the slide in the order noted on the Slide Master Layout this sheet working from the entrance of the slide to the exit.

Tube sections should be rotated so the reference bosses aligns from one section to the next except for slide exit pieces. See slide exit detail next sheet.

Refer to chart on this sheet that matches Earthscape part numbers to the slide manufacturer part numbers and the manufacturer's assembly/installation package numbers. Refer to slide manufacturer's assembly/installation package for more information.

Provide temporary support for the slide as it's being assembled. Once entire slide assembled, support post will be added. See next sheet.

Do not pour concrete piers at this time.

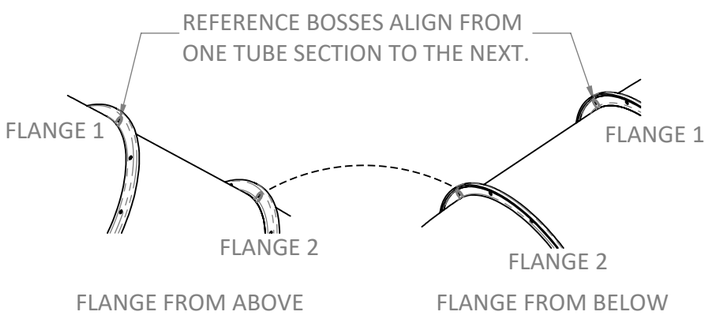

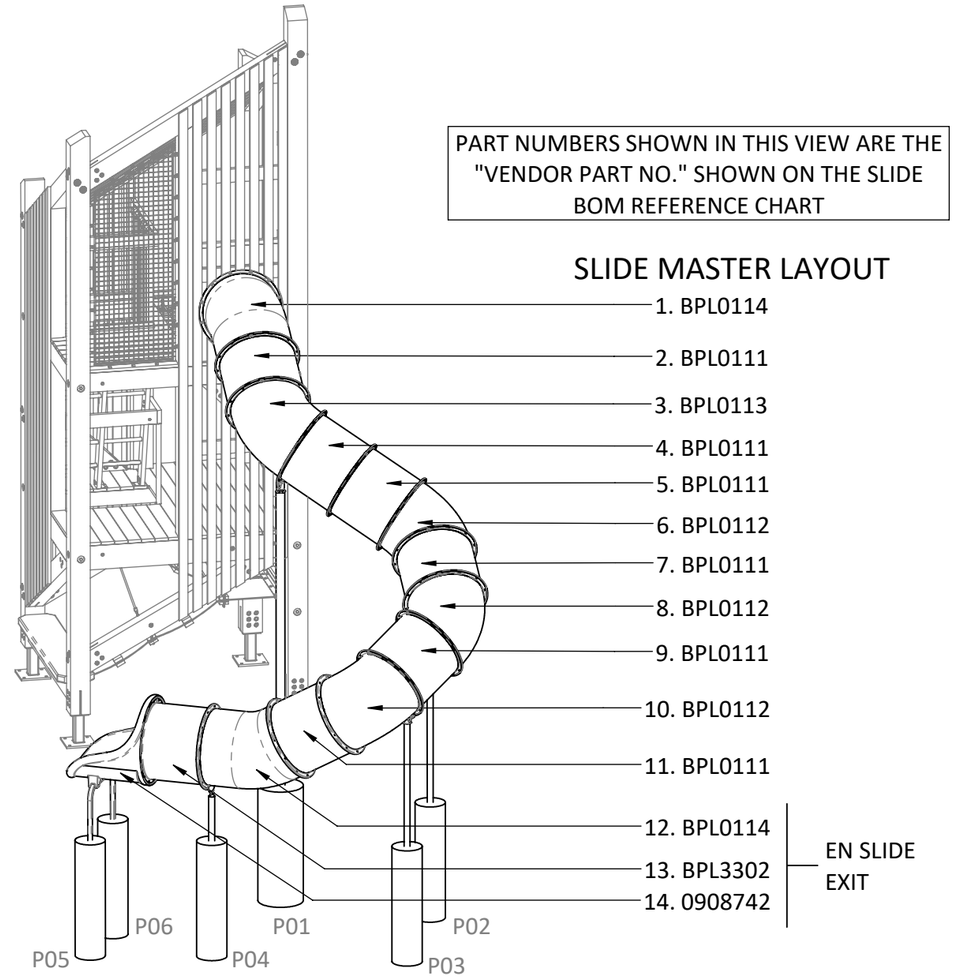

SLIDE BOM REFERENCE CHART				
EARTHSCAPE PART NO.	VENDOR PART NO.	VENDOR ASM NO.	DESCRIPTION	QTY.
SL3001	(2X) BPL0114 + (1X) BPL3302 + (1X) 0908742	ZZYYA846	CUSTOM SLIDE ENTRANCE WITH EN SLIDE EXIT - IN GROUND	1
SL3002	BPL0111	ZZUN3007	30" ROUND STRAIGHT TUBE SECTION	6
SL3004	BPL0113	ZZUN3008	30" ROUND LEFT TUBE SECTION	1
SL3005	BPL0112	ZZUN3009	30" ROUND RIGHT TUBE SECTION	3
SL3000		ZZUN3011	DO NOT CLIMB - SLIDE PANEL	1
SL3007		ZZUN3036	3FT ROUND TUBE SLIDE SUPPORT LEG - IN GROUND	1
SL3010		ZZUN3027	6FT ROUND TUBE SLIDE SUPPORT LEG - IN GROUND	1
SL3013		ZZUN3024	9FT TUBE SLIDE SUPPORT LEG - IN GROUND	1

REFER TO SLIDE MANUFACTURER'S INSTALLATION INSTRUCTIONS WHICH REFERNCE THE VENDOR ASM NO.

PROPERTY OF EARTHSCAPE PLAY INC. - DO NOT COPY. DO NOT DISTRIBUTE.

INSTALL SUPPORT POSTS

PLASTIC TUBE SLIDE - FLANGE - 12' - TURN RIGHT

STEP 6 - INSTALL SUPPORT POSTS

Secure the slide support posts to the slide with the bottom of the posts hanging in the augered holes. Support post installation as per slide manufacturer's details.

Refer to chart on the previous sheet that matches Earthscape part numbers to the slide manufacturer's assembly/installation package numbers.

Finished grade labels on support posts may be wrong. Correct heights noted on this sheet.

Do not pour concrete at this time.

STEP 7 - CHECK POSTS AND ADJUST HEIGHTS

Once all supports posts are hanging from the slide, confirm slide position by checking that all support posts are centered in the augered pier holes. Adjust slide position as needed.

With all support posts attached to the slide, adjust the temporary bracing so the support post heights match the dimensions provided on this sheet.

Slide exit height should be approximately 0.28m - 0.30m [11"-12"] above the finished play surface.

Ensure slide exit is sloped to drain water.

Pour concrete piers.

STEP 8 - REMOVE TEMPORARY SUPPORTS

Once concrete has cured remove the temporary supports.

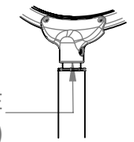

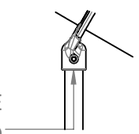

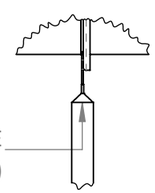

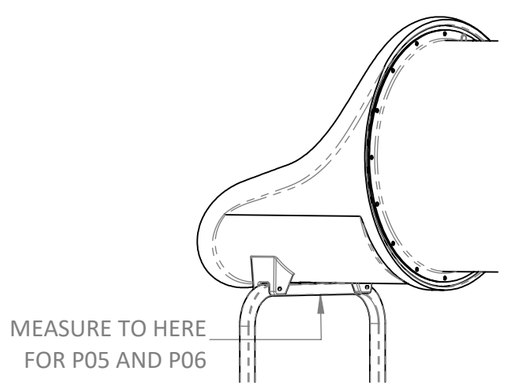

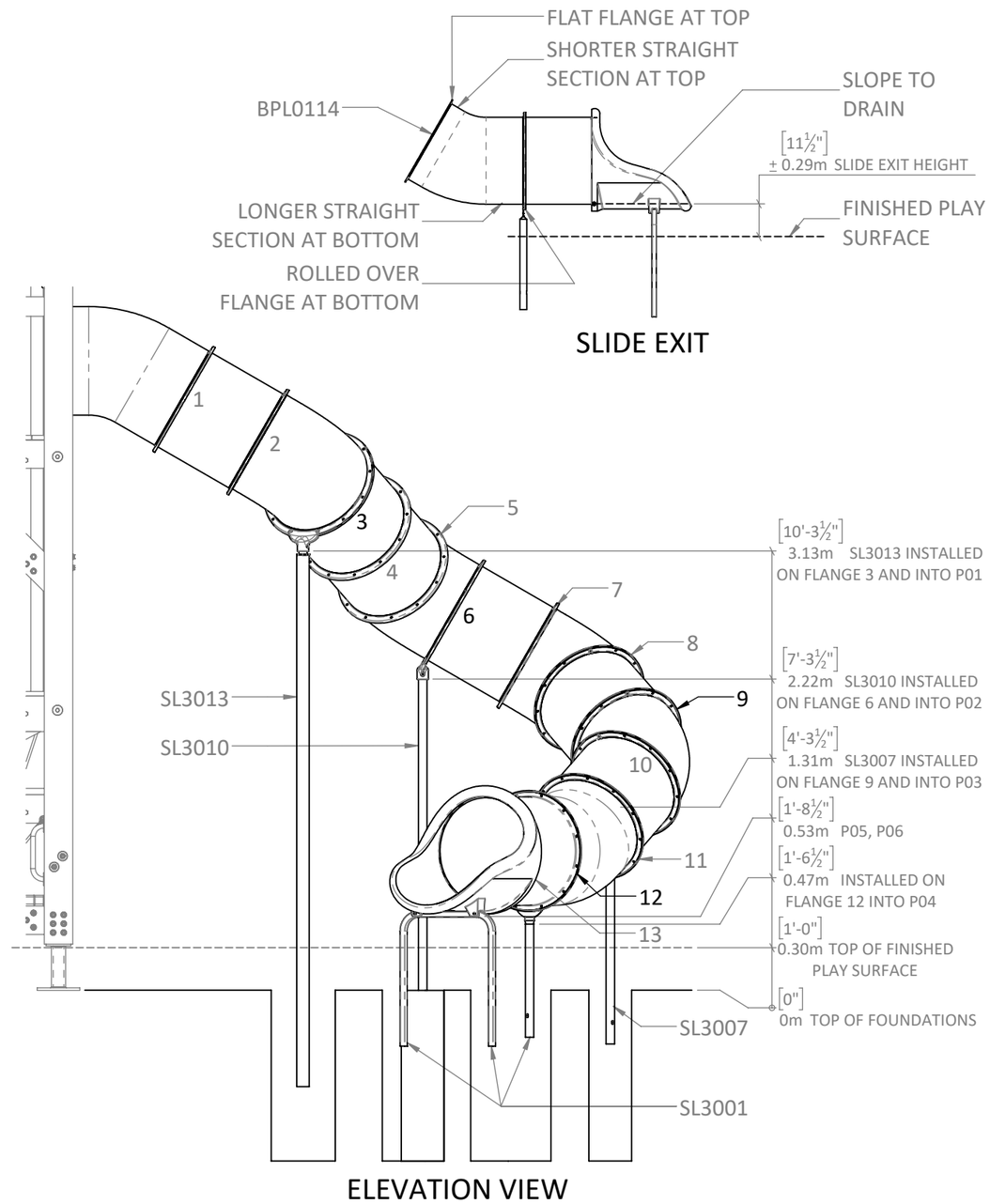

PROPERTY OF EARTHSCAPE PLAY INC. - DO NOT COPY. DO NOT DISTRIBUTE.

INSTALLATION INSTRUCTIONS

EARTHSCAPE COLLECTIONS

WITZEL DYCE
ENGINEERING INC.
PROJECT NO.: 12936-165

LICENSED PROFESSIONAL ENGINEER
M. JOHNSON
100514620
Sep 22, 2025
PROVINCE OF ONTARIO

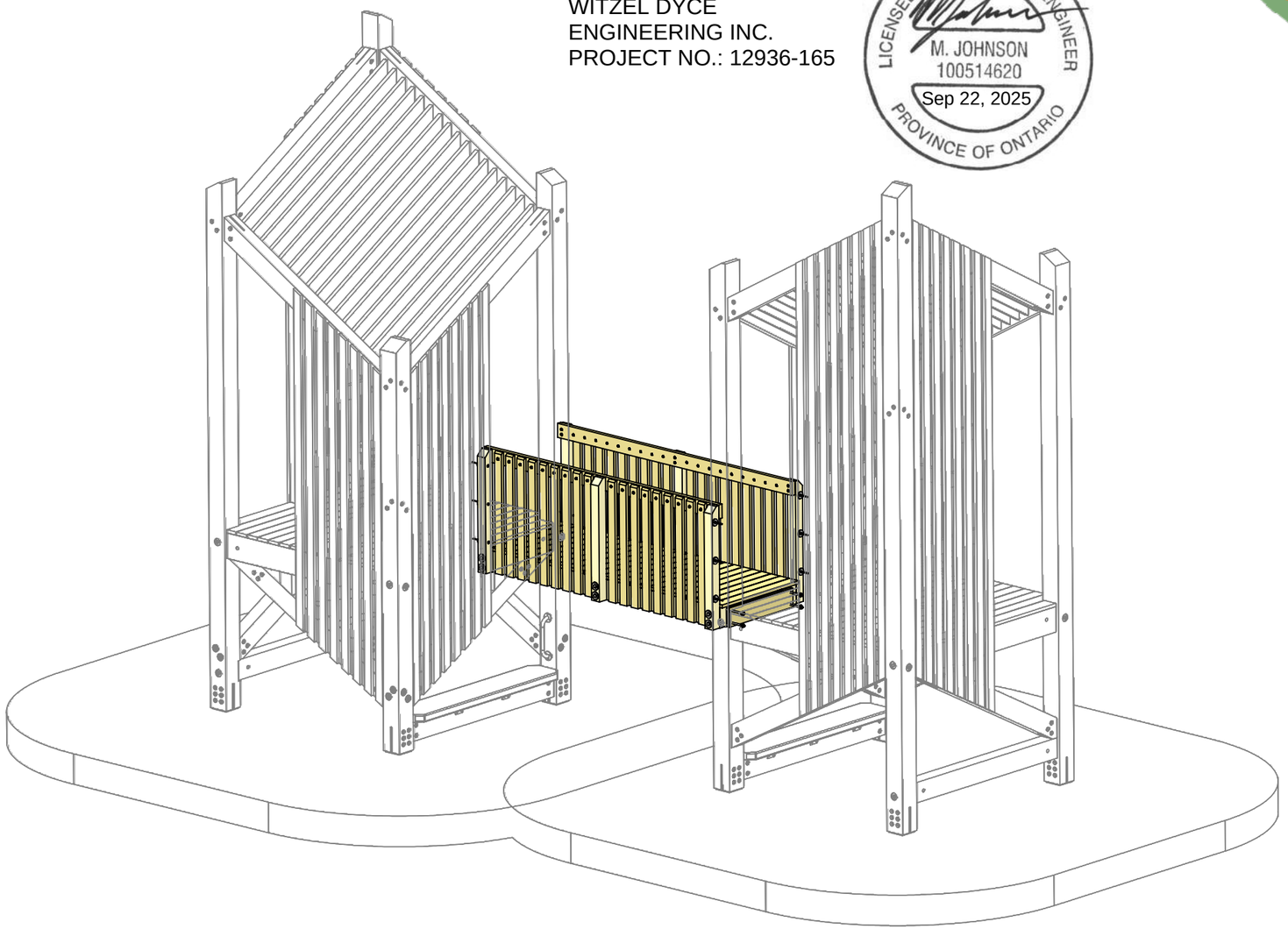

10' WOODEN BRIDGE

THESE INSTRUCTIONS APPLY TO THE FOLLOWING VERSIONS OF THIS PRODUCT:

F00363 - 10' WOODEN BRIDGE

WHICH IS DESIGNED TO BE INSTALLED ON THE FOLLOWING PRODUCTS:

F00182 - 2 LEVEL TIMBER TOWER
F00185 - 1 LEVEL TIMBER TOWER
F00407 - 2 LEVEL TIMBER TOWER
F00408 - 3 LEVEL TIMBER TOWER

NOTE: COLOURS SHOWN ARE REPRESENTATIONAL AND MAY NOT BE THE SAME AS THOSE OF THE SUPPLIED PRODUCT

FOR CSA AND ASTM SPECIFICATIONS AND GENERAL NOTES SEE MAIN STRUCTURE INSTALLATION PACKAGE

DATE DOCUMENT RELEASED 2022-05-30
DOCUMENT NUMBER: 1073001-R1

PROPERTY OF EARTHSCAPE PLAY INC. - DO NOT COPY. DO NOT DISTRIBUTE.

PLEASE READ ALL INSTRUCTIONS

Before starting to install this equipment be sure to read through and understand these instructions.

If you have any questions, contact your local dealer for assistance before proceeding.

MEASUREMENTS AND STANDARDS

Measurements have been provided in both metres and [feet-inches]. Ensure to follow standards noted for the location in which this play equipment is being installed. Those marked CSA are to be used in Canada and those marked ASTM to be used in the United States.

LIST OF ABBREVIATIONS

AYC = Alaskan Yellow Cedar
WRC = Western Red Cedar
DPS = Designated Play Surface
SS = Stainless Steel
HDG = Hot Dipped Galvanized
WWM = Welded Wire Mesh
TYP = Typical
C/W = Complete With
UNO = Unless Noted Otherwise
EWF = Engineered Wood Fiber
PIP = Poured-In-Place Rubber Surfacing
PT = Pressure Treated

TOOLS SUPPLIED WITH THIS PRODUCT

- No tools supplied

TOOLS THE INSTALLER NEEDS TO SUPPLY

- High torque drill
- Set of wood drill bits up to 1/2"
- T25 drive bit
- T40 drive bit
- Circular saw
- Transit or laser Level
- Rigging and lifting straps

EQUIPMENT THE INSTALLER NEEDS TO SUPPLY

- Machine to lift and position 300 kg [670 lb] pre-assembled wooden bridge.

INSTALLER CREW AND TIME REQUIRED

Number of people needed: 3
Typical total person-hours to install: 3

Time breakdown:
- 1 hours x 3 people to position and anchor the bridge in place

MATERIALS THE INSTALLER NEEDS TO SUPPLY

- No additional materails required

WARNINGS

These instructions do not provide specific guidance on the use of tools or the lifting and moving heavy objects. It is assumed that competent people are installing this product who are familiar with using the tools and equipment required and are knowledgeable and skilled at lifting and positioning heavy objects.

PROPERTY OF EARTHSCAPE PLAY INC. - DO NOT COPY. DO NOT DISTRIBUTE.

MAKE SURE YOU HAVE ALL THE PARTS

Examine the equipment and ensure you have all the required parts listed in the table below.

PART IMAGE	ITEM NO.	PART NO.	DESCRIPTION	QTY.
	1	H16687	ASSY SK A2 8mm X 200mm SS	12
	2	H16685	ASSY SK A2 8mm X 100mm SS	8
SEE IMAGE THIS SHEET	3	F00363	PRE-ASSEMBLED WOODEN BRIDGE 10'	1

IMAGES OF FASTENERS IN THIS TABLE ARE REPRESENTATIONAL TO HELP IDENTIFY PARTS.

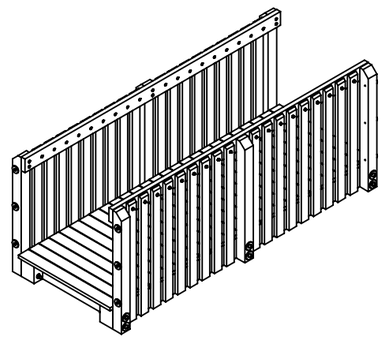

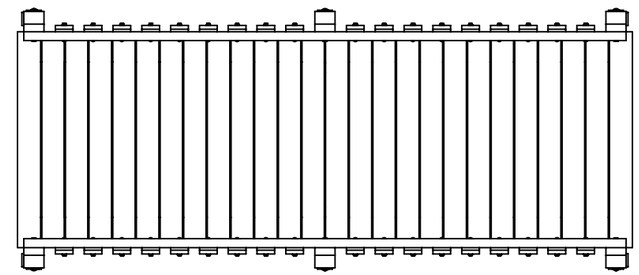

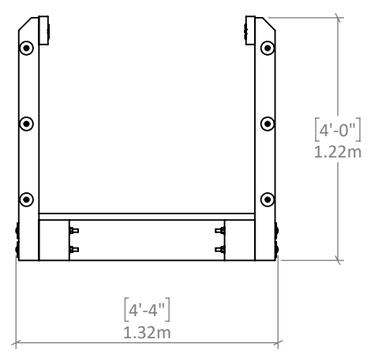

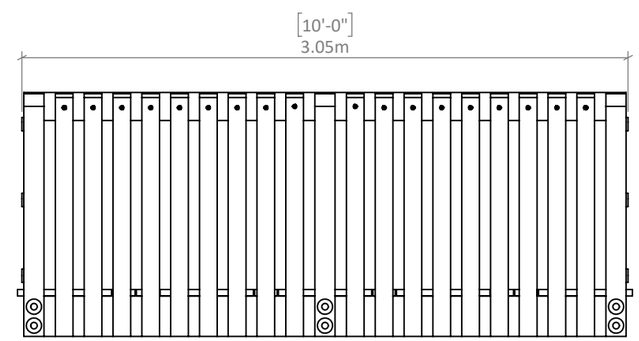

TIMBER BRIDGE SHIPPED PRE-ASSEMBLED AS SHOWN

PROPERTY OF EARTHSCAPE PLAY INC. - DO NOT COPY. DO NOT DISTRIBUTE.

STEP 1 - CONFIRM WHERE THE ACCESSORY IS TO BE INSTALLED

Review the complete tower installation package to determine on which side this accessory is to be installed and what the finished product should look like. The images shown on this page are representational and may not match your exact installation.

STEP 2 - INSTALL BRIDGE PRIOR TO ANCHORING TOWERS TO FOUNDATION PAD.

It might be necessary to make minor adjustments the position of the timber towers to suit the as-built bridge. Anchors towers after bridge has been installed.

STEP 3 - PREP BRIDGE AND CONFIRM GAP BETWEEN TOWERS IS SLIGHTLY LARGER THEN THE BRIDGE IS LONG.

Temporarily remove the end deckboard from both ends of bridge as per Figure 1. Make sure to note which end they came from and their orientation.

Measure distance between towers and compare to supplied bridge length. Pull towers away from each other enough to be able to fit bridge between.

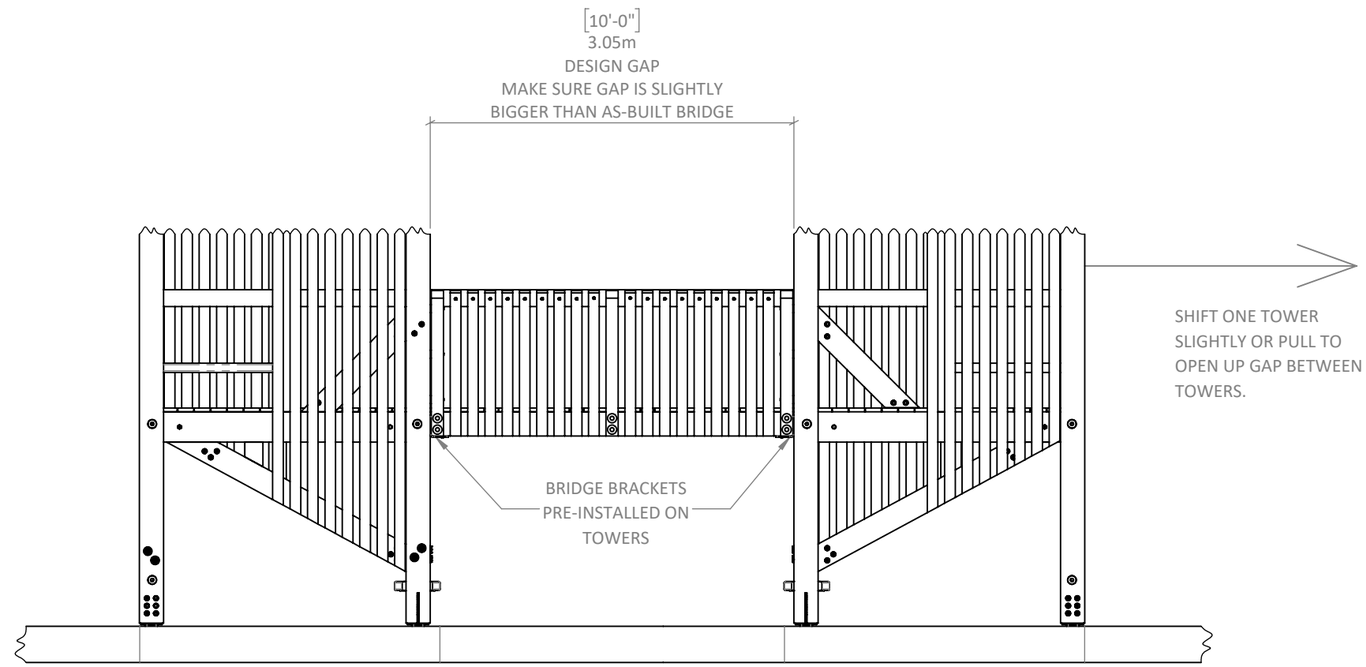

SAMPLE ELEVATION

(ACTUAL INSTALLATION MIGHT DIFFER FROM THIS VIEW. CHECK MAIN INSTALLTION PACKAGE TO SEE PORJECT SPECIFIC ARRANGMENT OF BRIDGE AND TOWERS

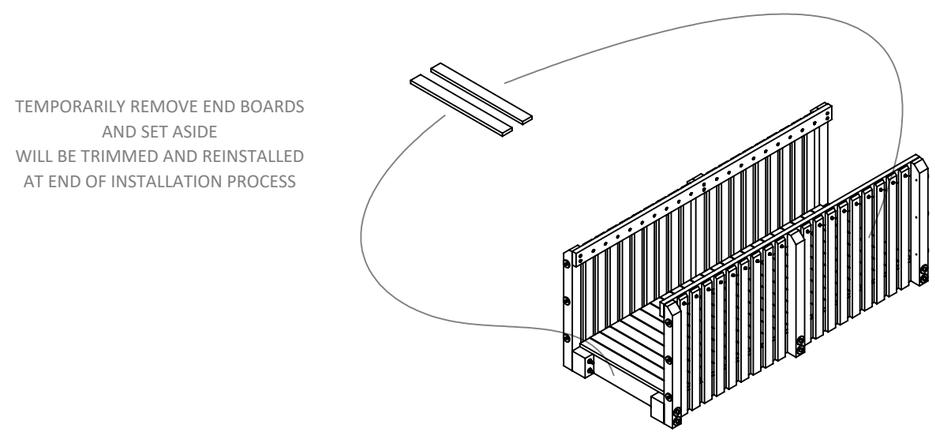

FIGURE 1

PROPERTY OF EARTHSCAPE PLAY INC. - DO NOT COPY. DO NOT DISTRIBUTE.

BRIDGE INSTALLATION 2 OF 3

10' WOODEN BRIDGE

STEP 4 - LIFT AND PLACE BRIDGE

Lift bridge with apporpriate equipment and move into position.
Lower bridge on to the 2 brackets pre-installed on the timber towers ensuring the bridge is centered in the tower opening.

STEP 5 - ADJUST POSITION OF TOWERS

Draw towers together so they are tight to the ends of the bridge.
Make minor adjustments to tower position to ensure both ends of bridge are centered in tower opening and that towers are tight to the end of the bridge.

STEP 6 - SECURE BRIDGE GUARDRAIL POSTS

Install screws through pre-dilled holes in end guardrail posts into timber tower posts.

Pre-drill all screw holes as per general notes.

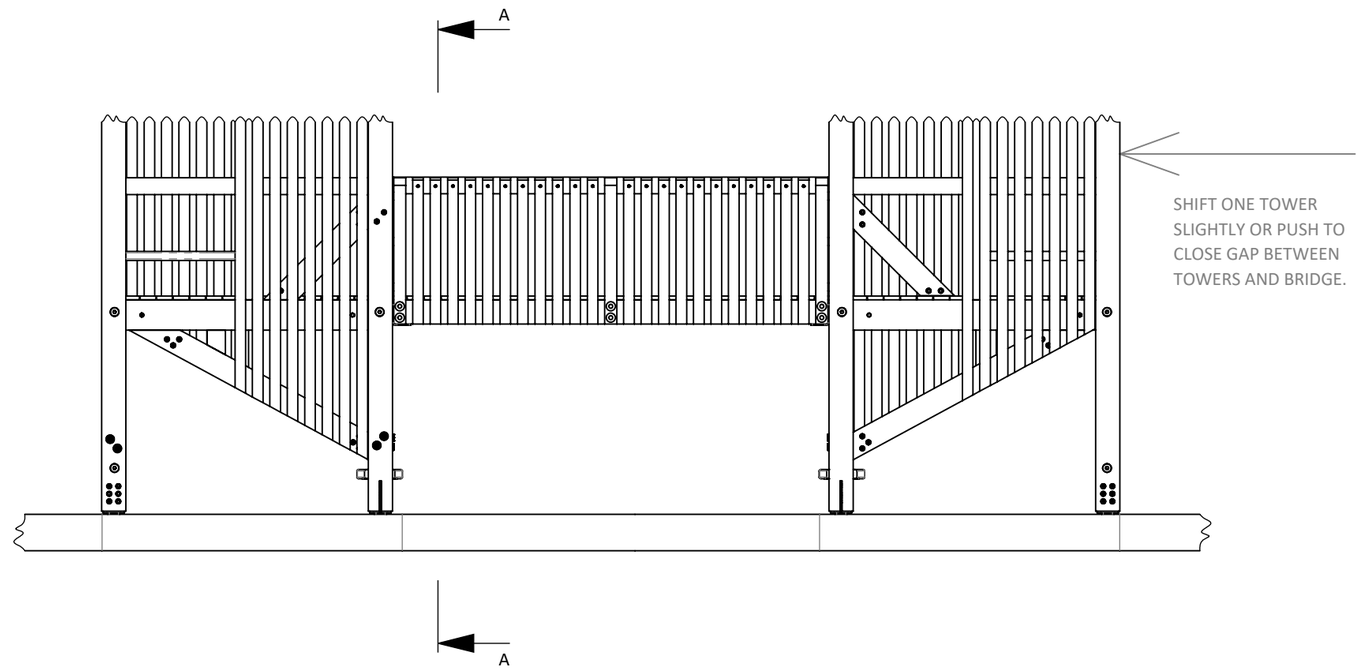

SAMPLE ELEVATION

(ACTUAL INSTALLATION MIGHT DIFFER FROM THIS VIEW. CHECK MAIN INSTALLTION PACKAGE TO SEE PORJECT SPECIFIC ARRANGMENT OF BRIDGE AND TOWERS

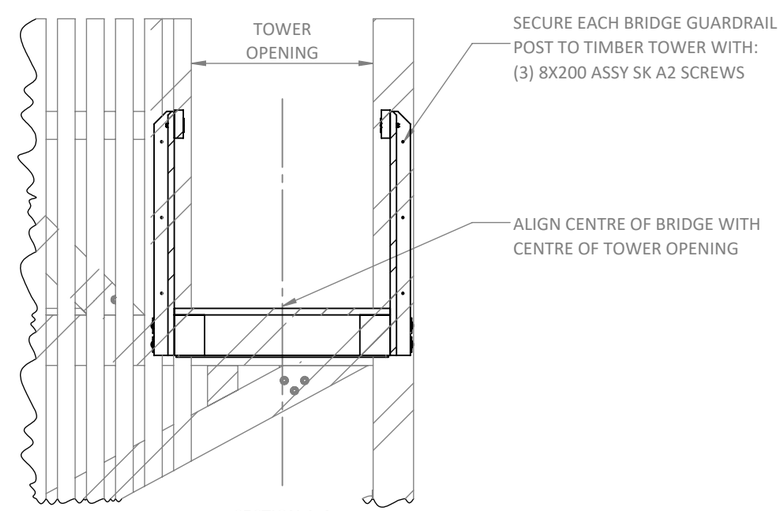

SECTION A-A

PROPERTY OF EARTHSCAPE PLAY INC. - DO NOT COPY. DO NOT DISTRIBUTE.

STEP 7 - SECURE BRIDGE STRINGERS

Install screws through bottom of steel brackets into underside of bridge timber stringers.

Pre-drill all screw holes as per general notes.

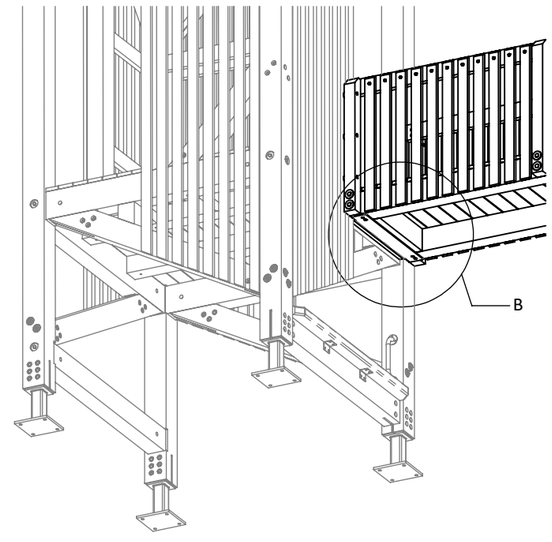

LOOKING UNDER BRIDGE

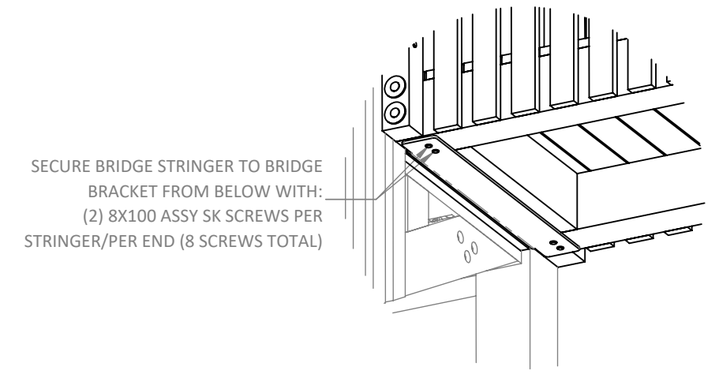

DETAIL B

STEP 8 - REINSTALL DECKBOARDS

Trim the removed deckboards to suit the gap in decking between the bridge and tower.

Ensure a +/-6mm (1/4") gap between deckboards as per Figure 2. Deckboards must not touch. Reinstall with the original screws.

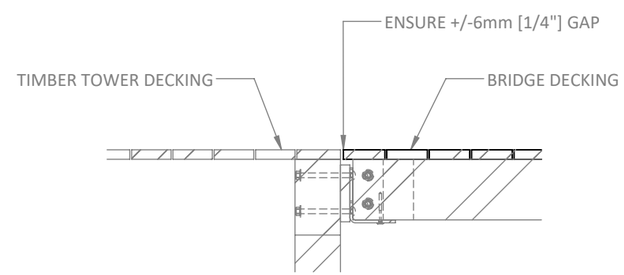

FIGURE 2

PROPERTY OF EARTHSCAPE PLAY INC. - DO NOT COPY. DO NOT DISTRIBUTE.

INSTALLATION INSTRUCTIONS

EARTHSCAPE COLLECTIONS

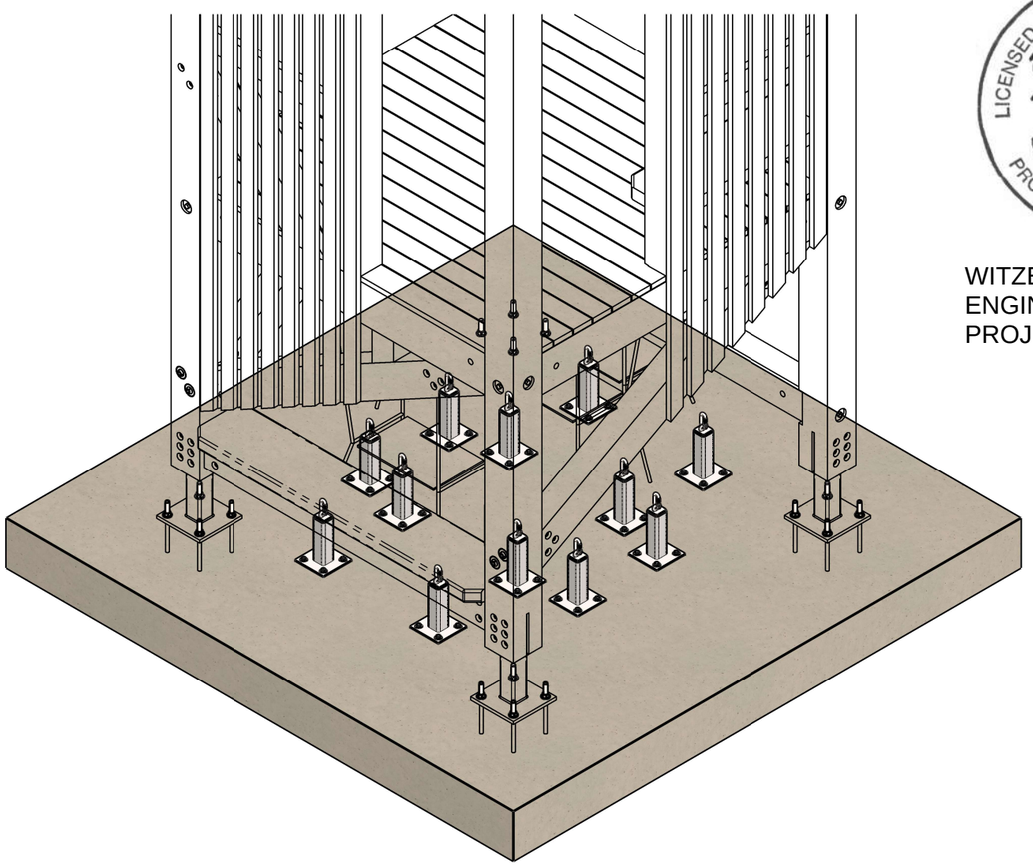

WITZEL DYCE
ENGINEERING INC.
PROJECT NO.: 12936-165

SLING SEATS - PIP

THESE INSTRUCTIONS APPLY TO THE FOLLOWING VERSIONS OF THIS PRODUCT:

F00403 - SLING SEATS - PIP

NOTE: COLOURS SHOWN ARE REPRESENTATIONAL AND MAY NOT BE THE SAME AS THOSE OF THE SUPPLIED PRODUCT

DATE DOCUMENT RELEASED 2022-06-05
DOCUMENT NUMBER: 1073938-R1

PROPERTY OF EARTHSCAPE PLAY INC. - DO NOT COPY. DO NOT DISTRIBUTE.

PLEASE READ ALL INSTRUCTIONS

Before starting to install this equipment be sure to read through and understand these instructions.

If you have any questions, contact your local dealer for assistance before proceeding.

MEASUREMENTS AND STANDARDS

Measurements have been provided in both metres and [feet-inches]. Ensure to follow standards noted for the location in which this play equipment is being installed. Those marked CSA are to be used in Canada and those marked ASTM to be used in the United States.

LIST OF ABBREVIATIONS

AYC = Alaskan Yellow Cedar
WRC = Western Red Cedar
DPS = Designated Play Surface
SS = Stainless Steel
HDG = Hot Dipped Galvanized
WWM = Welded Wire Mesh
TYP = Typical
C/W = Complete With
UNO = Unless Noted Otherwise
EWF = Engineered Wood Fiber
PIP = Poured-In-Place Rubber Surfacing
PT = Pressure Treated

TOOLS SUPPLIED WITH THIS PRODUCT

- No tools supplied

TOOLS THE INSTALLER NEEDS TO SUPPLY

- High torque drill
- 1/2" impact driver
- Set of socket - up to 3/4"
- Hammer drill
- Concrete drill bit, 1/2" x 8"
- Transit or Laser Level
- Rigging and lifting straps

EQUIPMENT THE INSTALLER NEEDS TO SUPPLY

- None

INSTALLER CREW AND TIME REQUIRED

Number of people needed: 2
Typical total person-hours to install: 4 hours
Time breakdown:

- 2 hours x 2 people for onsite fabrication and play equipment installation

MATERIALS THE INSTALLER NEEDS TO SUPPLY

- Threadmate threadlocker Vibra-Tite VC-3 (or equal)

WARNINGS

These instructions do not provide specific guidance on the use of tools or the lifting and moving heavy objects. It is assumed that competent people are installing this product who are familiar with using the tools and equipment required and are knowledgeable and skilled at lifting and positioning heavy objects.

PROPERTY OF EARTHSCAPE PLAY INC. - DO NOT COPY. DO NOT DISTRIBUTE.

MAKE SURE YOU HAVE ALL THE PARTS

Examine the equipment and ensure you have all the required parts listed in the table below.

PART IMAGE	ITEM NO.	PART NO.	DESCRIPTION	QTY.
SEE IMAGE THIS SHEET	1	B00022	CLIMBING NET ATTACHMENT POST - SURFACE MOUNT	12
	2	H30020	WASHER 1/2" X 1-3/8" SS	48
NO IMAGE PROVIDED	3	H60001	WELDED CHAIN 316 SS 0.375IN X 36IN LONG	12
	4	H60018	QUICK LINK 3/8" SS 316	12
	5	H60020	TITEN HD 1/2" X 5" CONCRETE SCREW	48

IMAGES OF FASTENERS IN THIS TABLE ARE REPRESENTATIONAL TO HELP IDENTIFY PARTS.

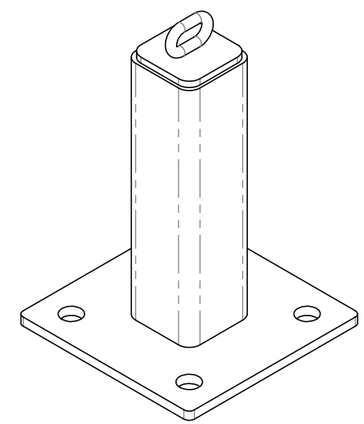

B00022 - CLIMBING NET ATTACHMENT POST

PROPERTY OF EARTHSCAPE PLAY INC. - DO NOT COPY. DO NOT DISTRIBUTE.

LOCATE PLAY EQUIPMENT

SLING SEATS - PIP

STEP 1 - LOCATING THE EQUIPMENT ON SITE

Layout the edges of the 12 Net Attachment Posts relative to the 1 level tower corner post base bracekts. Ensure you reference the correct side of the tower.

STEP 2 - SECURE BRACKETS TO CONCRETE FOUNDATION

Secure the bottom of the sling seat ropes (pre-installed on 1 level tower) to the Climbing Net Attachment Post as per Detail A this sheet.

Include 3/8" chain and quicklink as noted. Adjust length of chain as needed. Cut and dispose of excess.

STEP 3 - PIP SURFACING

Layout and installation of PIP surfacing is beyond the scope of these instructions, however, please refere to Typical PIP Surface Detail this sheet to see the intended cross section of the play surface relative to the Net Attachment Post bracket.

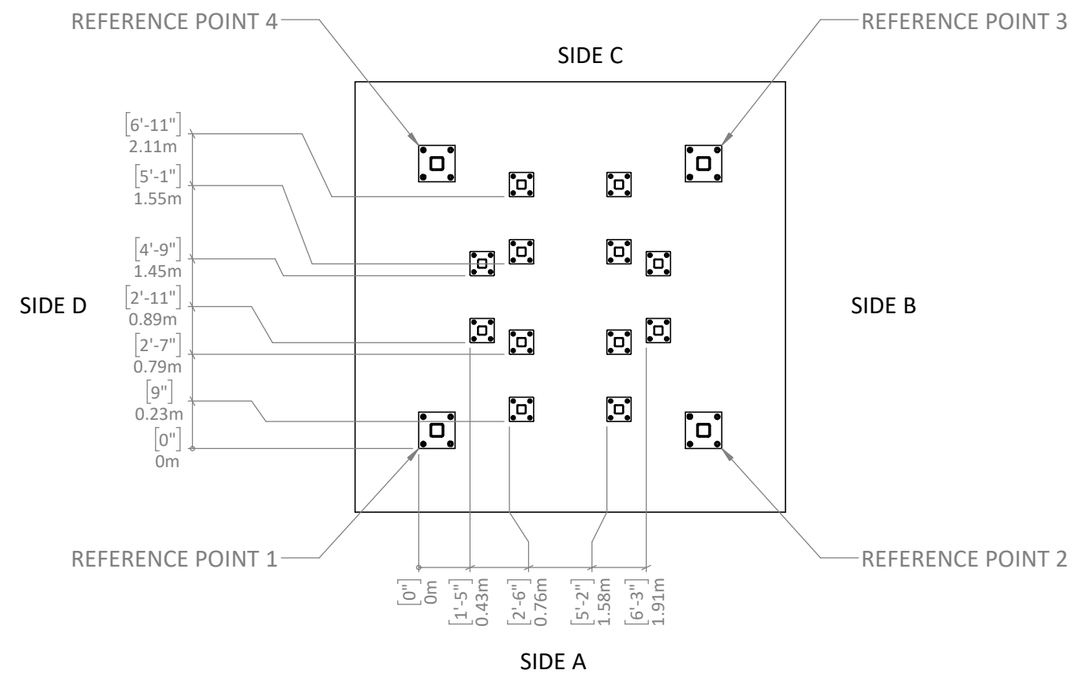

NET ATTACHMENT POST LAYOUT

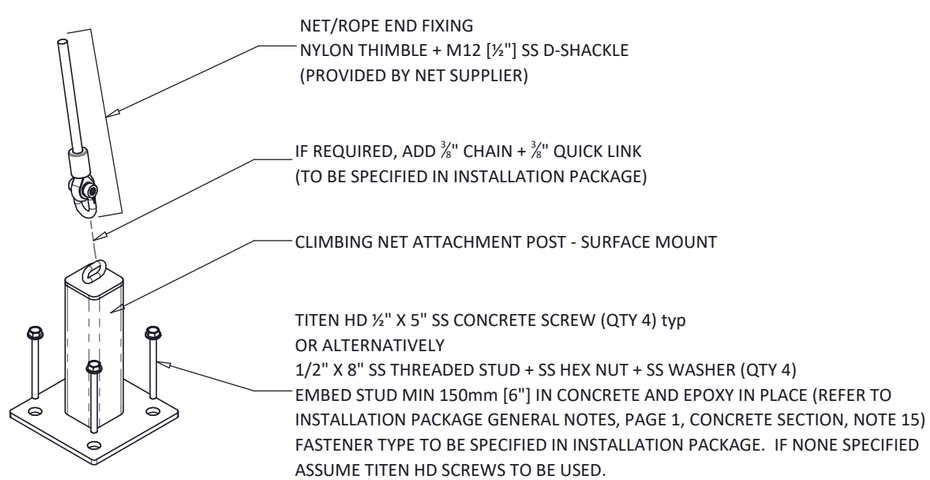

DETAIL A

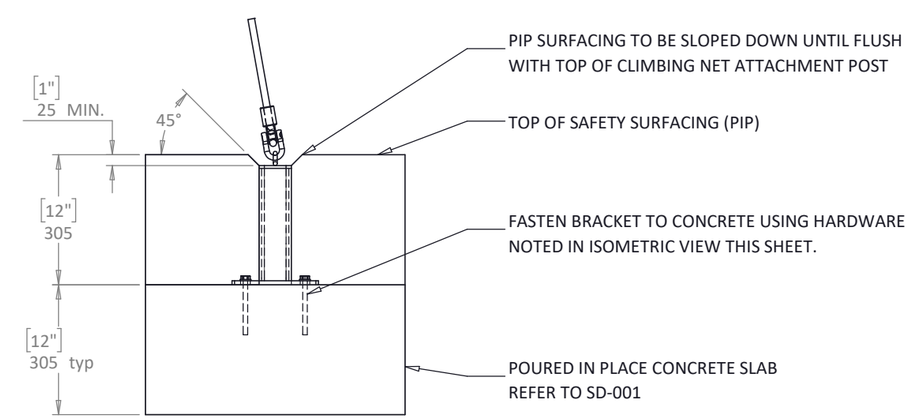

TYPICAL PIP SURFACING DETAIL

PROPERTY OF EARTHSCAPE PLAY INC. - DO NOT COPY. DO NOT DISTRIBUTE.

INSTALLATION INSTRUCTIONS

EARTHSCAPE COLLECTIONS

WITZEL DYCE
ENGINEERING INC.
PROJECT NO.: 12936-165

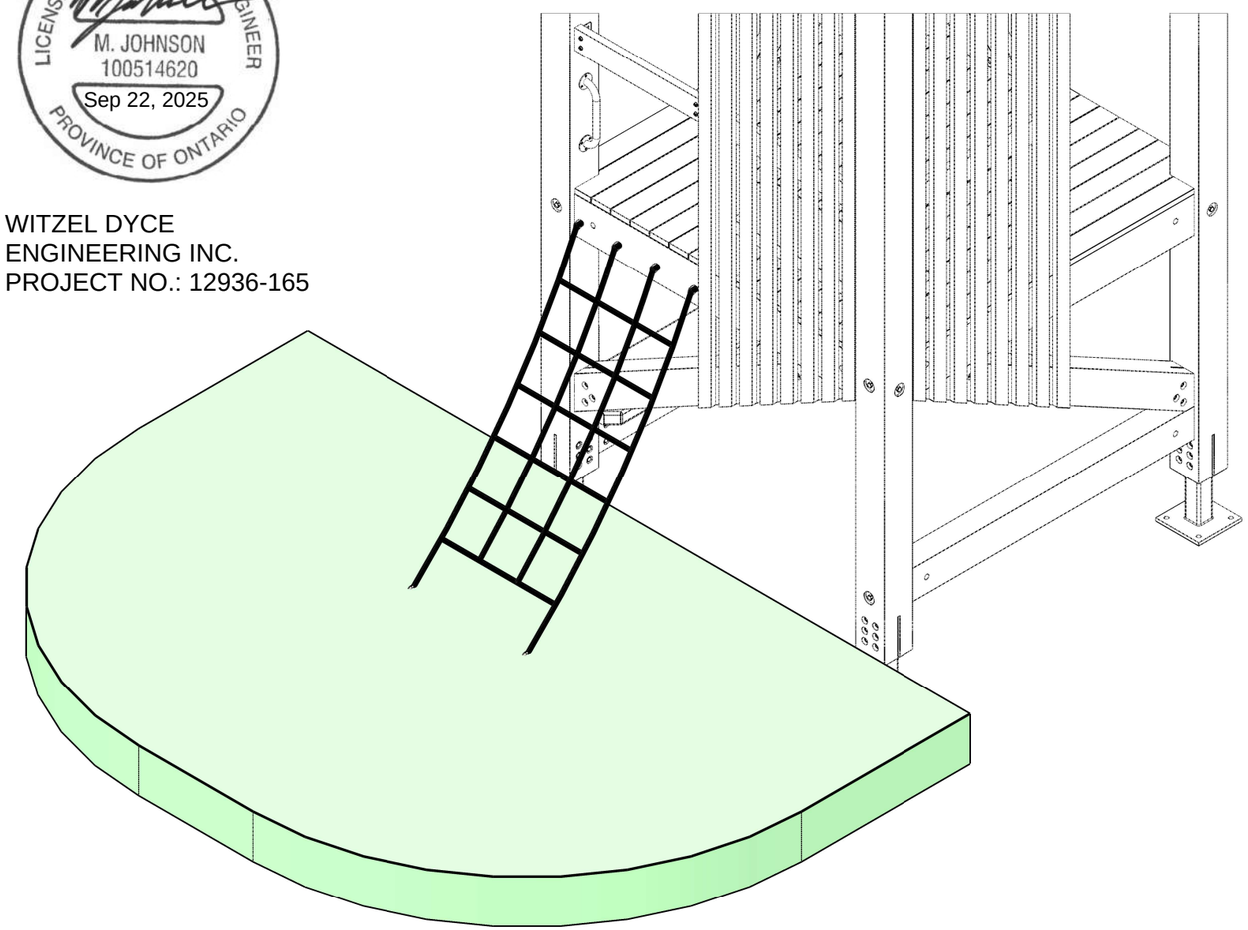

SAMPLE ISOMETRIC
(MAY NOT MATCH PROJECT SPECIFIC LOCATION OF SUB-ASSEMBLY)

ACCESS CLIMBING NET - PIP

THESE INSTRUCTIONS APPLY TO THE FOLLOWING VERSIONS OF THIS PRODUCT:

F00405 - ACCESS CLIMBING NET - PIP

WHICH IS DESIGNED TO BE INSTALLED ON THE FOLLOWING PRODUCTS:

F00185 - 1 LEVEL TIMBER TOWER
F00407 - 2 LEVEL TIMBER TOWER
F00408 - 3 LEVEL TIMBER TOWER

NOTE: COLOURS SHOWN ARE REPRESENTATIONAL AND MAY NOT BE THE SAME AS THOSE OF THE SUPPLIED PRODUCT

FOR CSA AND ASTM SPECIFICATIONS AND GENERAL NOTES SEE MAIN STRUCTURE INSTALLATION PACKAGE

DATE DOCUMENT RELEASED 2022-06-05
DOCUMENT NUMBER: 1073937-R1

PROPERTY OF EARTHSCAPE PLAY INC. - DO NOT COPY. DO NOT DISTRIBUTE.

PLEASE READ ALL INSTRUCTIONS

Before starting to install this equipment be sure to read through and understand these instructions.

If you have any questions, contact your local dealer for assistance before proceeding.

MEASUREMENTS AND STANDARDS

Measurements have been provided in both millimeters and [feet-inches]. Ensure to follow standards noted for the location in which this play equipment is being installed. Those marked CSA are to be used in Canada and those marked ASTM to be used in the United States.

LIST OF ABBREVIATIONS

AYC = Alaskan Yellow Cedar
WRC = Western Red Cedar
DPS = Designated Play Surface
SS = Stainless Steel
HDG = Hot Dipped Galvanized
WWM = Welded Wire Mesh
TYP = Typical
C/W = Complete With
UNO = Unless Noted Otherwise
EWF = Engineered Wood Fiber
PIP = Poured-In-Place Rubber Surfacing
PT = Pressure Treated

TOOLS SUPPLIED WITH THIS PRODUCT

- None supplied

TOOLS THE INSTALLER NEEDS TO SUPPLY

- Hammer drill
- Set of concrete drill bits - diameter and length as needed to install concrete screws
- High torque drill
- 1/2" ratcheting socket wrench
- Socket set up to 3/4"

EQUIPMENT THE INSTALLER NEEDS TO SUPPLY

- None

INSTALLER CREW AND TIME REQUIRED

Number of people needed: 2
Typical total person-hours to install: 2

Time breakdown:
- 1 hour x 2 person for onsite fabrication and play equipment installation

MATERIALS THE INSTALLER NEEDS TO SUPPLY

- Threadmate threadlocker Vibra-Tite VC-3 (or equal)

WARNINGS

These instructions do not provide specific guidance on the use of tools or the lifting and moving heavy objects. It is assumed that competent people are installing this product who are familiar with using the tools and equipment required and are knowledgeable and skilled at lifting and positioning heavy objects.

PROPERTY OF EARTHSCAPE PLAY INC. - DO NOT COPY. DO NOT DISTRIBUTE.

MAKE SURE YOU HAVE ALL THE PARTS

Examine the equipment and ensure you have all the required parts listed in the table below.

Access net comes pre-installed on tower.

PART IMAGE	ITEM NO.	PART NO.	DESCRIPTION	QTY.
SEE IMAGE THIS SHEET	1	B00022	CLIMBING NET ATTACHMENT POST - SURFACE MOUNT	2
	2	H30020	WASHER 1/2" X 1-3/8" SS	8
	3	H60020	TITEN HD 1/2" X 5" CONCRETE SCREW	8

IMAGES OF FASTENERS IN THIS TABLE ARE REPRESENTATIONAL TO HELP IDENTIFY PARTS.

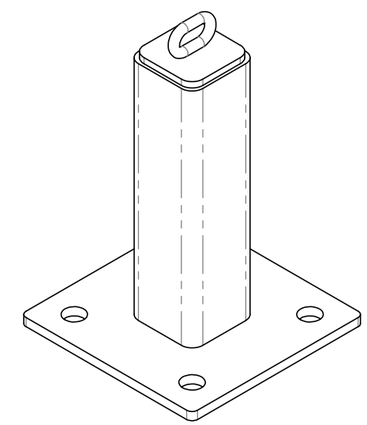

B00022 - CLIMBING NET ATTACHMENT POST

PROPERTY OF EARTHSCAPE PLAY INC. - DO NOT COPY. DO NOT DISTRIBUTE.

FINISHED PRODUCT

ACCESS CLIMBING NET - PIP

WHAT THE FINISHED PRODUCT LOOKS LIKE

Finished play surface and concrete foundations by Installer.

Foundation layout and details not shown in this package. Please review the main tower installation package for this information.

Views on this sheet may not match project specific location of the add-on accessory. It could be on a different side of the tower.
Review main tower installation package to see the position of this add-on for your specific project.

Layout and installation of PIP surfacing is beyond the scope of these instructions, however, please refere to Typical PIP Surface Detail this sheet to see the intended cross section of the play surface relative to the Net Attachment Post bracket.

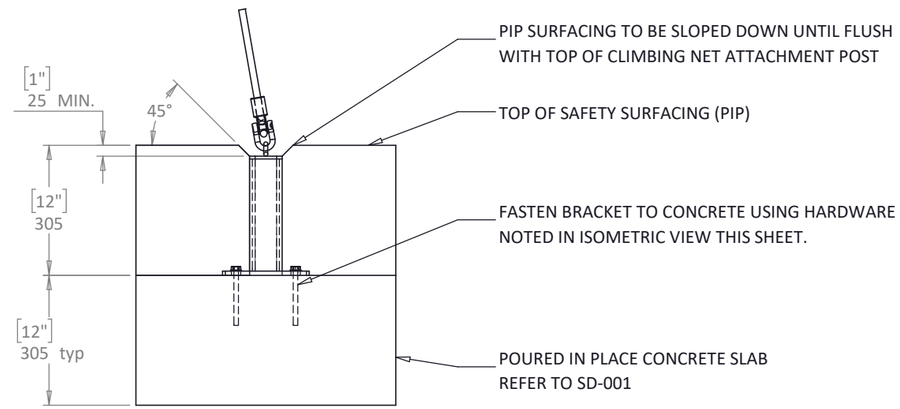

TYPICAL PIP SURFACE DETAIL

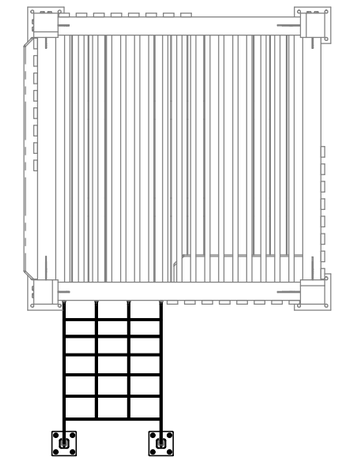

PLAN VIEW

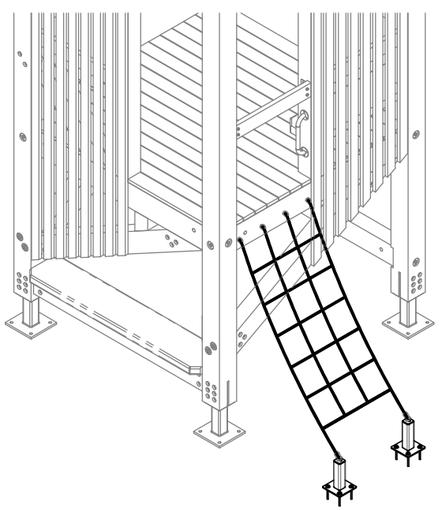

ISOMETRIC VIEW

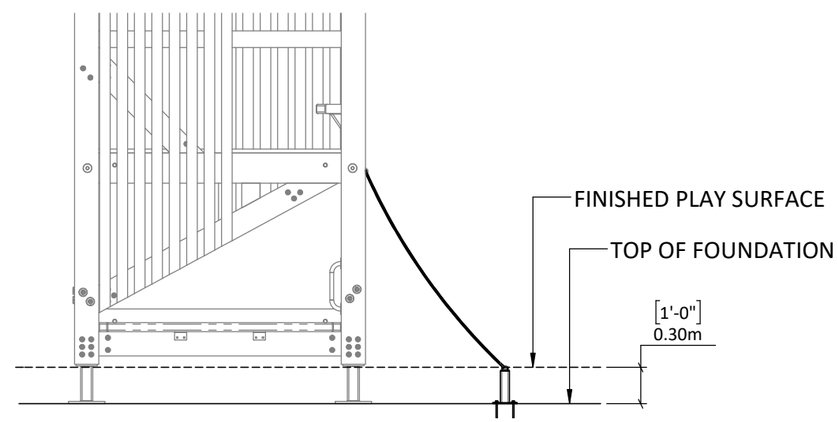

SIDE VIEW

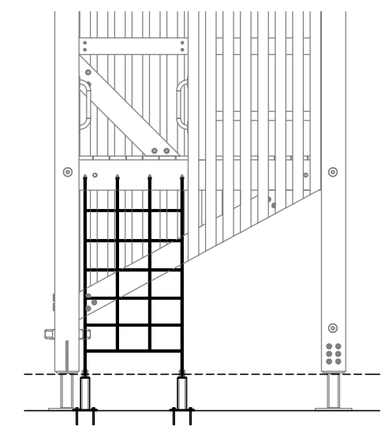

FRONT VIEW

PROPERTY OF EARTHSCAPE PLAY INC. - DO NOT COPY. DO NOT DISTRIBUTE.

LOCATE PLAY EQUIPMENT

ACCESS CLIMBING NET - PIP

STEP 1 - NET FOUNDATION

The concrete foundation needed for this add-on is illustrated in the main tower installation package and can vary from project to project. See main tower installation package for more information.

STEP 2 - PREPARE NET

Top end of net is pre-installed on tower. Unpack the net so it is hanging from the tower.

STEP 3 - LAYOUT CLIMBING NET ATTACHEMENT POSTS

Layout the position of the Climbing Net Attachment Post brackets as per the main tower installation package.

STEP 4 - CONNECT NET TO TOP OF POSTS

Connect the bottom end of the climbing net to the Attachement Posts as per Detail A this sheet.

STEP 5 - ADJUST ATTACHMENT POST POSITION AND SECURE TO CONCRETE PAD

Position the Attachement Posts to align with the layout marks and then check the tension in the net as noted in the Sample Elevation View this sheet.

If there is not enough sag, shift the attachment posts towards or away from the tower as needed until the correct sag is achiaved.

Secure the Attachment Posts to the pad with concrete screws as noted in Detail A this sheet.

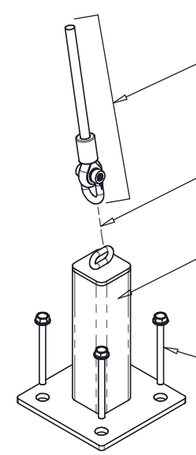

NET/ROPE END FIXING
NYLON THIMBLE + M12 [½"] SS D-SHACKLE
(PROVIDED BY NET SUPPLIER)

IF REQUIRED, ADD ⅜" CHAIN + ⅜" QUICK LINK
(TO BE SPECIFIED IN INSTALLATION PACKAGE)

CLIMBING NET ATTACHMENT POST - SURFACE MOUNT

TITEN HD ½" X 5" SS CONCRETE SCREW (QTY 4) typ
OR ALTERNATIVELY
1/2" X 8" SS THREADED STUD + SS HEX NUT + SS WASHER (QTY 4)
EMBED STUD MIN 150mm [6"] IN CONCRETE AND EPOXY IN PLACE (REFER TO INSTALLATION PACKAGE GENERAL NOTES, PAGE 1, CONCRETE SECTION, NOTE 15)
FASTENER TYPE TO BE SPECIFIED IN INSTALLATION PACKAGE. IF NONE SPECIFIED ASSUME TITEN HD SCREWS TO BE USED.

DETAIL A

APPLY THREADLOCK TO SECURE ALL SCREW CONNECTIONS

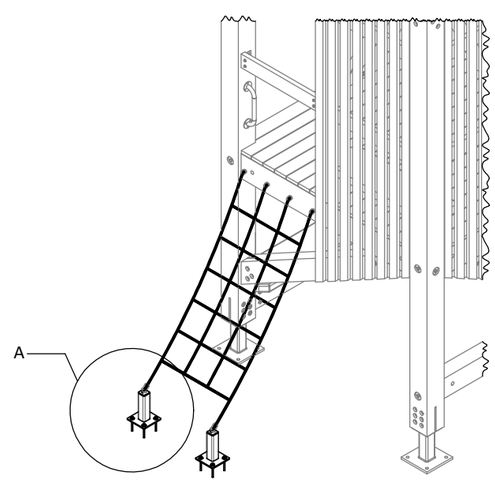

SAMPLE ISOMETRIC
(MAY NOT MATCH PROJECT SPECIFIC LOCATION OF SUB-ASSEMBLY)

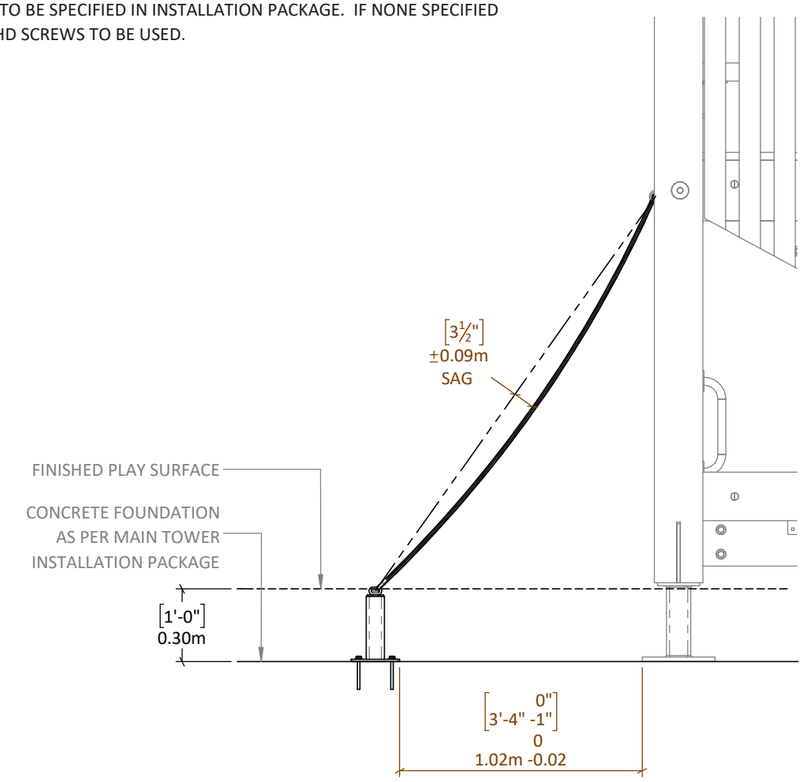

SAMPLE ELEVATION VIEW

Attachment A
Map of Targeted Areas and Species for Plant Management
Hurld Park Climate Resiliency Hub
Woburn, MA

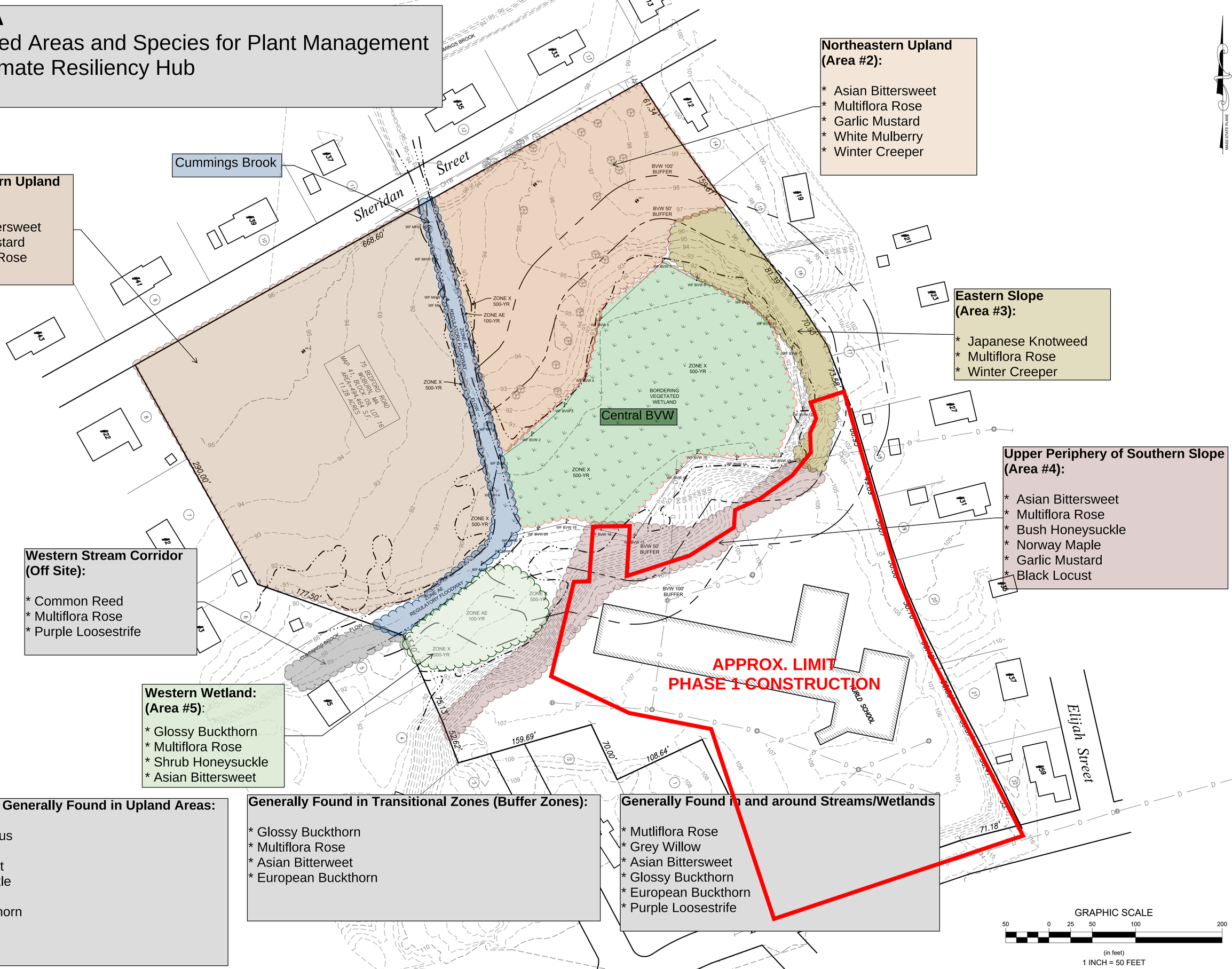

Northwestern Upland (Area #1):

* Asian Bittersweet
* Garlic Mustard
* Multiflora Rose

Northeastern Upland (Area #2):

* Asian Bittersweet
* Multiflora Rose
* Garlic Mustard
* White Mulberry
* Winter Creeper

Eastern Slope (Area #3):

* Japanese Knotweed
* Multiflora Rose
* Winter Creeper

Upper Periphery of Southern Slope (Area #4):

* Asian Bittersweet
* Multiflora Rose
* Bush Honeysuckle
* Norway Maple
* Garlic Mustard
* Black Locust

Western Stream Corridor (Off Site):

* Common Reed
* Multiflora Rose
* Purple Loosestrife

Western Wetland: (Area #5):

* Glossy Buckthorn
* Multiflora Rose
* Shrub Honeysuckle
* Asian Bittersweet

Invasive Species Generally Found in Upland Areas:

* Winged Euonymus
* Multiflora Rose
* Asian Bittersweet
* Bush Honeysuckle
* Garlic Mustard
* European Buckthorn
* Norway Maple
* Tree of Heaven

Generally Found in Transitional Zones (Buffer Zones):

* Glossy Buckthorn
* Multiflora Rose
* Asian Bitterweet
* European Buckthorn

Generally Found in and around Streams/Wetlands

* Mutliflora Rose
* Grey Willow
* Asian Bittersweet
* Glossy Buckthorn
* European Buckthorn
* Purple Loosestrife